SICK.COM

DATA SHEET

OD5-85T20

OD Precision
Displacement Sensors

SICK Sensor Intelligence

DISPLACEMENT SENSORS

OD5-85T20

ORDERING INFORMATION

Type	part no.
OD5-85T20	6035979

Further device versions and accessories at www.sick.com/OD_Precision

DETAILED TECHNICAL DATA

FEATURES

System part	Sensor head
Measuring range	65 mm ... 105 mm [1] [2]
Repeatability	1 µm [3]
Linearity	Diffuse ± 20 µm [3] Specular ± 16 µm [3]
Response time	≥ 0.1 ms [4] [5]
Measuring frequency	≤ 10 kHz [1] [5]
Output time	≥ 0.1 ms
Emitted beam	
Light source	Laser, red
Typ. light spot size (distance)	70 µm x 290 µm (85 mm)
Key laser figures	
Normative reference	IEC 60825-1:2014, EN 60825-1:2014
Laser class	2 [6] [7]
Special task	Thickness measurement of transparent material
Additional function	Mean-value setting 1 ... 4,096x Selectable measuring frequency (automatic / 0.1 ms ... 3.2 ms) Automatic sensitivity adjustment Manual sensitivity adjustment

[1] 6 % ... 90 % remission; at default settings.

[2] If there are reflections, the measuring range is reduced to 72.3 mm ... 92.3 mm.

[3] Measurement at 90% remission (ceramic, white), or mirror for OD5-25x; averaging set to: 256 or 4096 for OD5-25x; constant ambient conditions.

[4] Time needed for automatic sensitivity adjustment is calculated as: sampling period x 20. At default setting 100 µs (10kHz) this is <= 2ms.

[5] Default setting for OD5-350x100 and OD5-500x200 = 0.8 ms, or 1.25 kHz, all others = 0.1 ms/10 kHz.

[6] Wavelength: 658 nm, max. output: 1 mW.

[7] Do not intentionally look into the laser beam. Never point the laser beam at people's eyes.

	Mutual interference Glass thickness measurement
Thickness measurement of transparent material	2 mm ... 20 mm
General notes	
Note on use	OD Precision sensor head can be used in combination with AOD5-P/N1 or stand-alone via RS-422
Safety-related parameters	
$MTTF_D$	101 years
DC_{avg}	0%

[1] 6 % ... 90 % remission; at default settings.

[2] If there are reflections, the measuring range is reduced to 72.3 mm ... 92.3 mm.

[3] Measurement at 90% remission (ceramic, white), or mirror for OD5-25x; averaging set to: 256 or 4096 for OD5-25x; constant ambient conditions.

[4] Time needed for automatic sensitivity adjustment is calculated as: sampling period x 20. At default setting 100 µs (10kHz) this is <= 2ms.

[5] Default setting for OD5-350x100 and OD5-500x200 = 0.8 ms, or 1.25 kHz, all others = 0.1 ms/10 kHz.

[6] Wavelength: 658 nm, max. output: 1 mW.

[7] Do not intentionally look into the laser beam. Never point the laser beam at people's eyes.

INTERFACES

Serial	✓ , RS-422
Remark	RS-232 optional via external evaluation unit AOD5
Digital output	
Number	5 [1]
Type	PNP / NPN
Maximum output current I_A	≤ 100 mA
Analog output	
Number	3 [1] [2]
Type	Current output / voltage output
Current	4 mA ... 20 mA, ≤ 300 Ω
Voltage	0 V ... 10 V [3]
Laser-off input	1 x laser-off

[1] Optional over evaluation unit AOD5.

[2] A maximum of three current and three voltage outputs are possible via the AOD5 evaluation unit.

[3] Output resistance 100 Ω, min. load 10 k Ω.

ELECTRONICS

Supply voltage U_B	DC 12 V ... 24 V [1]
Warm-up time	≤ 5 min
Display	LEDs, 4'' color display on optional evaluation unit
Enclosure rating	IP67
Protection class	III
Connection type	Cable with male connector, 0.5 m

[1] DC 12 V (–5 %) ... DC 24 V (+10 %).

MECHANICS

Dimensions (W x H x D)	29 mm x 78 mm x 75 mm
Housing material	Metal (Aluminum)
Window material	Glass

[1] Includes 0.5 m cable.

Weight	250 g [1]

[1] Includes 0.5 m cable.

AMBIENT DATA

Ambient temperature, operation	–10 °C ... +50 °C
Ambient temperature, storage	–20 °C ... +60 °C
Relative air humidity (non-condensing)	35 % ... 85 %
Temperature drift	± 0.01 % FS/K (FS = Full Scale = Measuring range of sensor)
Typ. Ambient light immunity	Artificial light: ≤ 3,000 lx Sunlight: ≤ 10,000 lx
Vibration resistance	10 Hz ... 55 Hz (amplitude 1.5 mm, x-, y-, z-axis 2 hours each)
Shock resistance	50 G (x, y, z axis 3 times each)

CERTIFICATES

EU declaration of conformity	✓
UK declaration of conformity	✓
ACMA declaration of conformity	✓
Moroccan declaration of conformity	✓
China RoHS	✓
China Compulsory Product Certification (CCC) exempt	✓
Information according to Art. 3 of Data Act (Regulation EU 2023/2854)	✓

DIMENSIONAL DRAWING OD5-85XXX

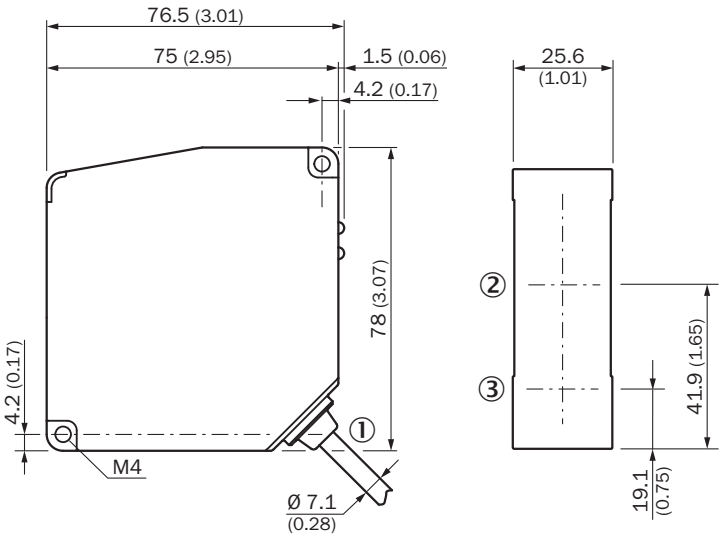

Dimensions in mm (inch)
① Cable Ø 7.1 mm, 0.5 m with connector, 12-pin
② optical axis, receiver
③ optical axis, sender

CONNECTION TYPE HIROSE 12-PIN MALE CONNECTOR FOR SENSOR HEAD

CONNECTION DIAGRAM

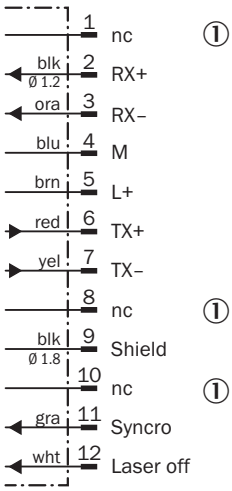

① Not assigned

ADJUSTMENT POSSIBLE

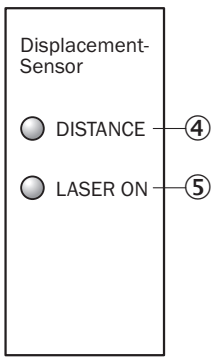

④ Distance indicator
⑤ Status indicator laser (laser on)

LIGHT SPOT SIZE OD5-85T20

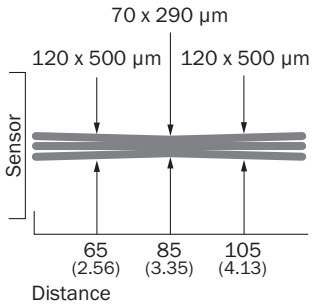

All dimensions in mm (inch)

LINEARITY OD5-85T20

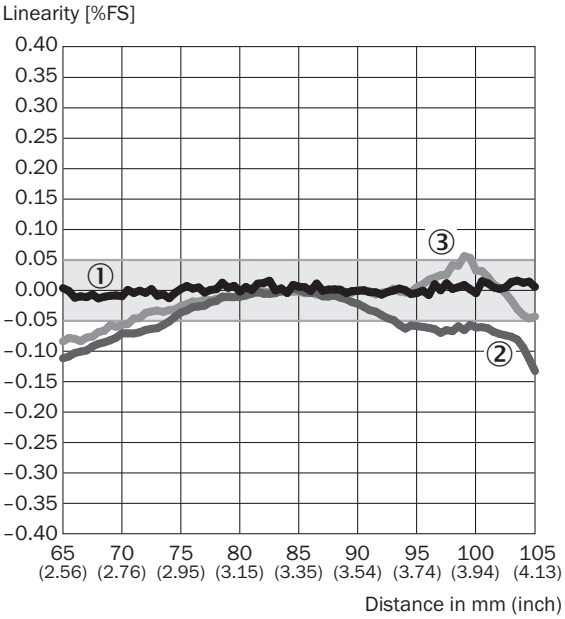

① White ceramic
② stainless steel
③ black rubber

Further information as well as suitable accessories, example applications and downloads such as CAD dimensional models, operating instructions and software can be found at www.sick.com/6035979

SICK AG
WALDKIRCH
GERMANY
SICK.COM

SICK AT A GLANCE

SICK is a leading global technology company for intelligent sensors and integrated solutions in industrial automation. Our technologies set benchmarks, making your industrial processes more efficient, safer and more sustainable – both in logistics and manufacturing operations.

SICK combines sensor intelligence with industry expertise and certified consulting services. We provide the ideal foundation for scalable as well as tailor-made automation solutions and create added value along the entire value chain. Our close partnerships with our customers are more than just a promise: Together, we optimize productivity, improve quality, protect health and safety, and help build a sustainable future. All with empathy and trust.

Since 1946, we have been developing innovative technologies with passion and a pioneering spirit. With a global network in around 40 countries, SICK has a global presence and is always close by. The company's headquarters are located in Waldkirch near Freiburg, Germany. Our customers benefit from our understanding of both local and global requirements, which enables us to deliver tailor-made solutions

SICK
Sensor Intelligence