SICK.COM

DATA SHEET

VSE180-2P42432

V180
Photoelectric sensors

SICK Sensor Intelligence

Illustration may differ

PHOTOELECTRIC SENSORS

VSE180-2P42432

ORDERING INFORMATION

Type	part no.
VSE180-2P42432	6041823

Further device versions and accessories at www.sick.com/V180

DETAILED TECHNICAL DATA

FEATURES

Functional principle	Through-beam photoelectric sensor
Dimensions (W x H x D)	18 mm x 18 mm x 69.8 mm
Housing design (light emission)	Cylindrical
Housing length	69.8 mm
Thread diameter (housing)	M18 x 1
Optical axis	Axial
Sensing range max.	0 m ... 28 m
Sensing range	0 m ... 20 m
Focus	Approx. 5°
Type of light	Visible red light
Light source	LED [1]
Light spot size (distance)	Ø 1,100 mm (20 m)
Angle of dispersion	Approx. 5°
Wave length	645 nm
Adjustment	Potentiometer, 270° (Sensitivity) [2]

[1] Average service life: 100,000 h at T_U = +25 °C.

[2] Receiver.

MECHANICS/ELECTRONICS

Supply voltage U_B	10 V DC ... 30 V DC [1]
Ripple	± 10 % [2]
Power consumption, sender	20 mA [3]
Power consumption, receiver	15 mA [3]
Switching output	PNP [4]
Switching mode	Light/dark switching [4]
Switching mode selector	Selectable via L/D control cable
Signal voltage PNP HIGH/LOW	Approx. V_S – 1.8 V / 0 V
Output current $I_{max.}$	≤ 100 mA
Response time	≤ 0.5 ms [5]
Switching frequency	1,000 Hz [6]
Connection type	Male connector M12, 4-pin
Circuit protection	A [7] B [8] D [9]
Protection class	III
Weight	94 g
Housing material	Metal, Nickel-plated brass and PC
Optics material	Plastic, PMMA
Enclosure rating	IP67
Items supplied	Fastening nuts (4 x)
Ambient operating temperature	–25 °C ... +55 °C
Ambient temperature, storage	–40 °C ... +70 °C
UL File No.	NRKH2.E300503 & NRKH8.E300503

[1] Limit values when operated in short-circuit protected network: max. 8 A.

[2] May not fall below or exceed U_V tolerances.

[3] Without load.

[4] Control wire open: dark switching D.ON.

[5] Signal transit time with resistive load.

[6] With light/dark ratio 1:1.

[7] A = V_S connections reverse-polarity protected.

[8] B = inputs and output reverse-polarity protected.

[9] D = outputs overcurrent and short-circuit protected.

SAFETY-RELATED PARAMETERS

$MTTF_D$	1,296 years
DC_{avg}	0 %

CERTIFICATES

EU declaration of conformity	✓
UK declaration of conformity	✓
ACMA declaration of conformity	✓
Moroccan declaration of conformity	✓
China RoHS	✓

China Compulsory Product Certification (CCC) exempt	✓
cULus certificate	✓
Photobiological safety (DIN EN 62471) certificate	✓

ADJUSTMENTS

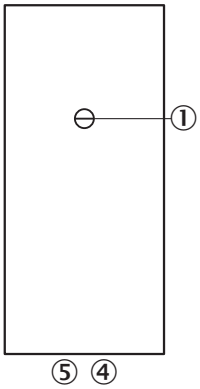

③ sensitivity control 270°
④ LED indicator orange: switching output active
⑤ LED indicator green

CONNECTION TYPE

CONNECTION DIAGRAM CD-060

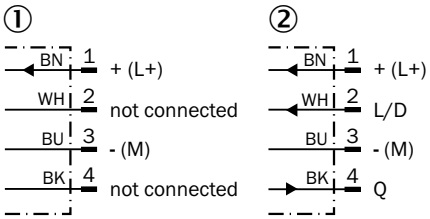

① sender
② receiver

CHARACTERISTIC CURVE VSE180-2, 28 M, AXIAL

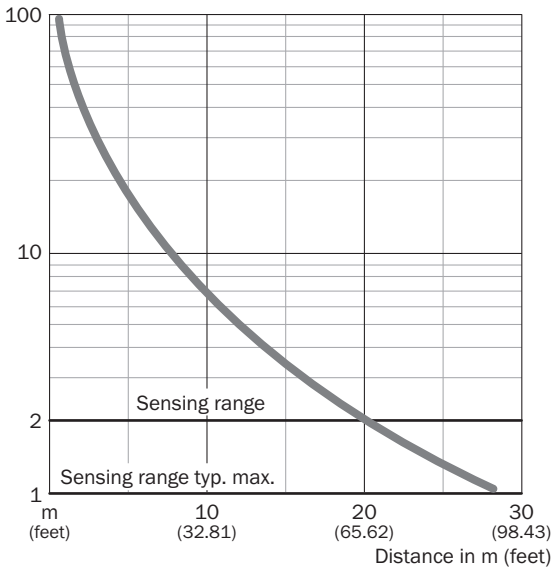

LIGHT SPOT SIZE VSE180-2, 28 M, AXIAL

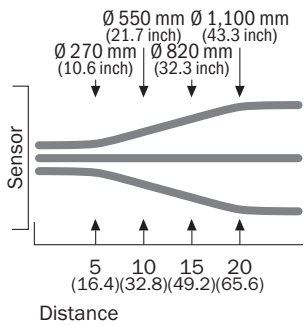

SENSING RANGE DIAGRAM VSE180-2, 28 M, AXIAL

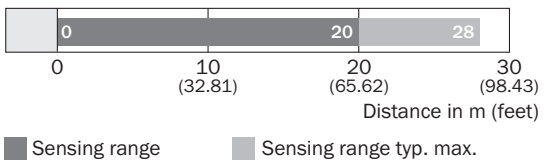

DIMENSIONAL DRAWING VSE180-2, METAL, AXIAL

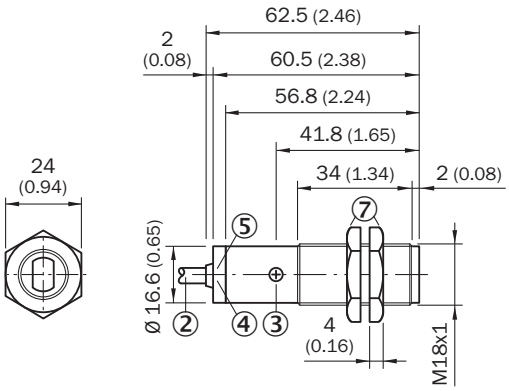

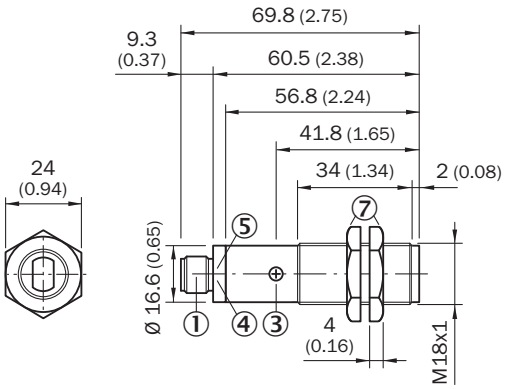

Dimensions in mm (inch)
① M12 male device connector, 4-pin
② Connection cable 2 m
③ sensitivity control 270°
④ LED indicator orange: switching output active
⑤ LED indicator green: strength indicator
⑦ Fastening nuts (2x); width across 24, metal

Further information as well as suitable accessories, example applications and downloads such as CAD dimensional models, operating instructions and software can be found at www.sick.com/6041823

SICK AG
WALDKIRCH
GERMANY
SICK.COM

SICK AT A GLANCE

SICK is a leading global technology company for intelligent sensors and integrated solutions in industrial automation. Our technologies set benchmarks, making your industrial processes more efficient, safer and more sustainable – both in logistics and manufacturing operations.

SICK combines sensor intelligence with industry expertise and certified consulting services. We provide the ideal foundation for scalable as well as tailor-made automation solutions and create added value along the entire value chain. Our close partnerships with our customers are more than just a promise: Together, we optimize productivity, improve quality, protect health and safety, and help build a sustainable future. All with empathy and trust.

Since 1946, we have been developing innovative technologies with passion and a pioneering spirit. With a global network in around 40 countries, SICK has a global presence and is always close by. The company's headquarters are located in Waldkirch near Freiburg, Germany. Our customers benefit from our understanding of both local and global requirements, which enables us to deliver tailor-made solutions

SICK
Sensor Intelligence