SICK.COM

DATA SHEET

BEF-KHS-N06

Brackets
Mounting systems

SICK Sensor Intelligence

MOUNTING SYSTEMS

BEF-KHS-N06

ORDERING INFORMATION

Type	part no.
BEF-KHS-N06	2051612

Further device versions and accessories at www.sick.com/Brackets

DETAILED TECHNICAL DATA

FEATURES

Accessory group	Mounting systems
Accessory family	Brackets
Description	Plate N06 for universal clamp bracket, M18
Material	Zinc plated steel (sheet), Zinc die cast (clamping bracket)
Items supplied	Universal clamp (5322626), mounting hardware
Usable for	MH15 MH15V V180-2 V18V W15 GR18 V18 V18 Laser V12-2 SimpleSense SureSense M18 round sensors
Mounting system type	Mounting plate

DIMENSIONAL DRAWING

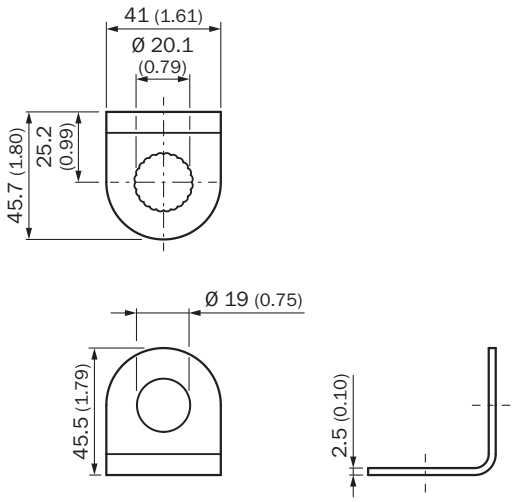

Dimensions in mm (inch)

DIMENSIONAL DRAWING

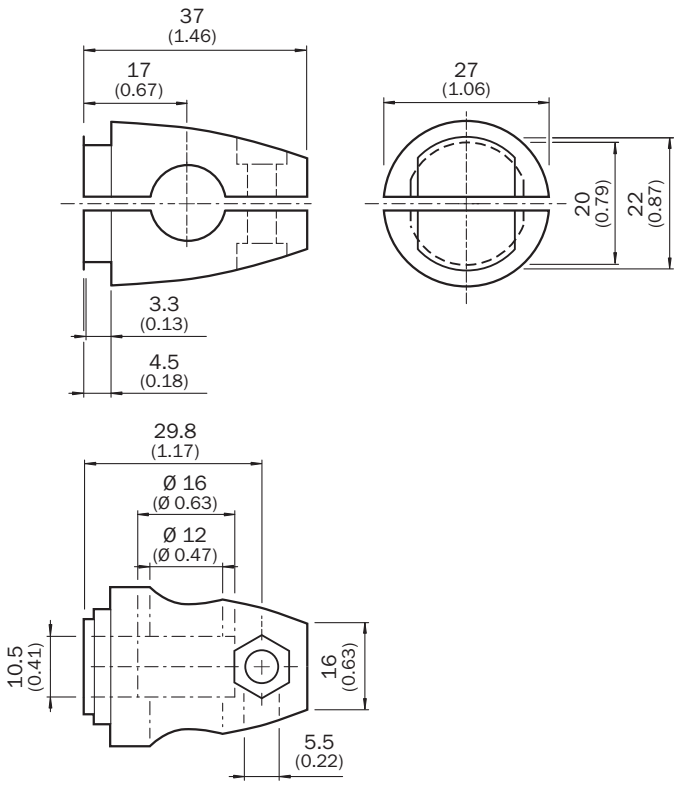

Dimensions in mm (inch)
BEF-KHS-KH3

Further information as well as suitable accessories, example applications and downloads such as CAD dimensional models, operating instructions and software can be found at www.sick.com/2051612

SICK AG
WALDKIRCH
GERMANY
SICK.COM

SICK AT A GLANCE

SICK is a leading global technology company for intelligent sensors and integrated solutions in industrial automation. Our technologies set benchmarks, making your industrial processes more efficient, safer and more sustainable – both in logistics and manufacturing operations.

SICK combines sensor intelligence with industry expertise and certified consulting services. We provide the ideal foundation for scalable as well as tailor-made automation solutions and create added value along the entire value chain. Our close partnerships with our customers are more than just a promise: Together, we optimize productivity, improve quality, protect health and safety, and help build a sustainable future. All with empathy and trust.

Since 1946, we have been developing innovative technologies with passion and a pioneering spirit. With a global network in around 40 countries, SICK has a global presence and is always close by. The company's headquarters are located in Waldkirch near Freiburg, Germany. Our customers benefit from our understanding of both local and global requirements, which enables us to deliver tailor-made solutions

SICK
Sensor Intelligence