SICK.COM

DATA SHEET

DGS35-5H408192

DGS3x
Incremental encoders

Sensor Intelligence

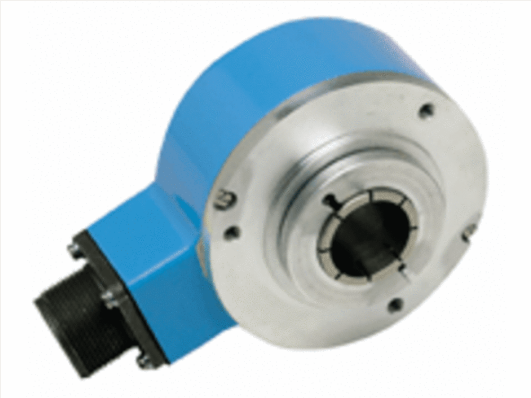

Illustration may differ

INCREMENTAL ENCODERS

DGS35-5H408192

ORDERING INFORMATION

Type	part no.
DGS35-5H408192	7101661

Further device versions and accessories at www.sick.com/DGS3x

DETAILED TECHNICAL DATA

PERFORMANCE

Pulses per revolution	8,192
Measuring step	90° electric/pulses per revolution
Measuring step deviation	± 45° / pulses per revolution
Error limits	± 45° / pulses per revolution

INTERFACES

Communication interface	Incremental
Communication Interface detail	HTL / Push pull
Output frequency	300 kHz
Load current	40 mA
Operating current	100 mA (without load)

ELECTRICAL DATA

Connection type	Male connector, MS, 10-pin, radial
Supply voltage	8 ... 24 V
Reference signal, number	1
Reference signal, position	180°, electronically, gated with B negative
Reverse polarity protection	✓
Short-circuit protection of the outputs	✓

MECHANICAL DATA

Mechanical design	Through hollow shaft

[1] Separately order collets for 1/2", 3/4", 5/8", 7/8", 10 mm, 12 mm, 14 mm, 15 mm, 18 mm, 20 mm, 22 mm, 24 mm and 25 mm as accessories.

[2] Based on devices with male connector.

Shaft diameter	1" [1]
Flange type / stator coupling	T1 stator coupling
Weight	1.1 kg [2]
Shaft material	Brass
Flange material	Aluminum
Housing material	Aluminum
Start up torque	9 Ncm (+20 °C)
Operating torque	7 Ncm (+20 °C)
Operating speed	2,200 min^{-1}
Moment of inertia of the rotor	490 gcm^2
Bearing lifetime	4.5 x 10^9 revolutions
Angular acceleration	≤ 100,000 rad/s^2

[1] Separately order collets for 1/2", 3/4", 5/8", 7/8", 10 mm, 12 mm, 14 mm, 15 mm, 18 mm, 20 mm, 22 mm, 24 mm and 25 mm as accessories.

[2] Based on devices with male connector.

AMBIENT DATA

EMC	EN 61000-6-2, EN 61000-6-3
Enclosure rating	IP66, Housing side, male connector [1]
Permissible relative humidity	95 % (Condensation not permitted)
Operating temperature range	–20 °C ... +70 °C
Storage temperature range	–30 °C ... +85 °C, without package
Resistance to shocks	50 g, 11 ms
Resistance to vibration	20 g, 5 Hz ... 2,000 Hz

[1] With mating connector fitted.

CLASSIFICATIONS

eCl@ss 5.0	27270501
eCl@ss 5.1.4	27270501
eCl@ss 6.0	27270590
eCl@ss 6.2	27270590
eCl@ss 7.0	27270501
eCl@ss 8.0	27270501
eCl@ss 8.1	27270501
eCl@ss 9.0	27270501
eCl@ss 10.0	27270501
eCl@ss 11.0	27270501
eCl@ss 12.0	27270501
ETIM 5.0	EC001486
ETIM 6.0	EC001486
ETIM 7.0	EC001486
ETIM 8.0	EC001486
UNSPSC 16.0901	41112113

DIMENSIONAL DRAWING

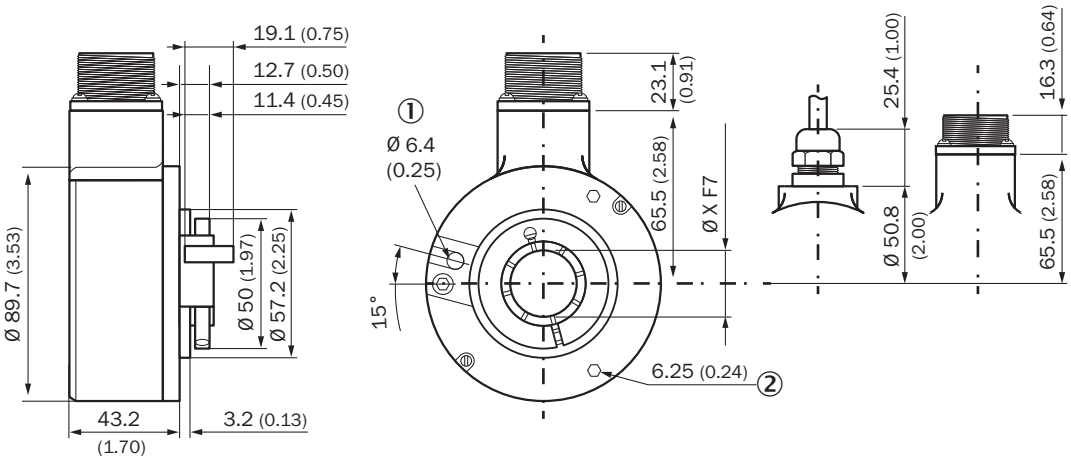

Dimensions in mm (inch)
① Dowel pin
② depth

Type	Shaft diameterX F7
DGS3x-xxHxxxxxx DGS3x-xxJxxxxxx	1"
DGS3x-xxKxxxxxx DGS3x-xxLxxxxxx	30 mm

PIN ASSIGNMENT

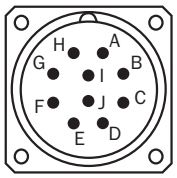

PIN10-pin	Wire colors (cable connection)	Explanation
A	White	A
B	Pink	B
C	Purple	M
H	Brown	A-
I	Black	B-
J	Yellow	M-
D	Red	$+V_s$
F	Blue	GND
G	N/A	Earthing point on housing
N/A	N/A	Screen

DIAGRAMS

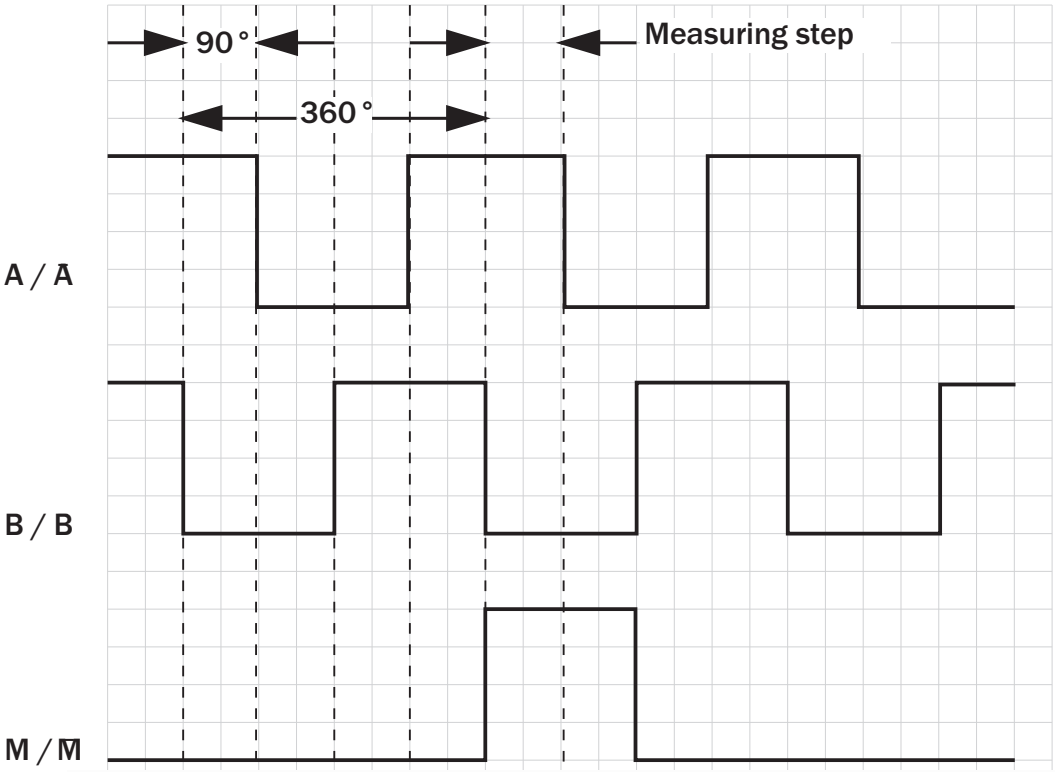

For resolutions less than 10,000 PPR

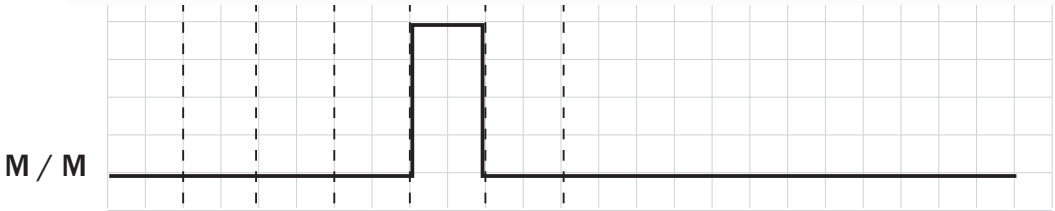

For resolutions greater than or equal to 10,000 PPR and push-pull driver option

Supply voltage	Output
4,5 V ... 5,5 V	TTL
8 V ... 24 V	TTL
8 V ... 24 V	HTL
8 V ... 24 V	Open Collector
5 V ... 15 V	TTL / HTL

Further information as well as suitable accessories, example applications and downloads such as CAD dimensional models, operating instructions and software can be found at www.sick.com/7101661

SICK AG
WALDKIRCH
GERMANY
SICK.COM

SICK AT A GLANCE

SICK is a leading global technology company for intelligent sensors and integrated solutions in industrial automation. Our technologies set benchmarks, making your industrial processes more efficient, safer and more sustainable – both in logistics and manufacturing operations.

SICK combines sensor intelligence with industry expertise and certified consulting services. We provide the ideal foundation for scalable as well as tailor-made automation solutions and create added value along the entire value chain. Our close partnerships with our customers are more than just a promise: Together, we optimize productivity, improve quality, protect health and safety, and help build a sustainable future. All with empathy and trust.

Since 1946, we have been developing innovative technologies with passion and a pioneering spirit. With a global network in around 40 countries, SICK has a global presence and is always close by. The company's headquarters are located in Waldkirch near Freiburg, Germany. Our customers benefit from our understanding of both local and global requirements, which enables us to deliver tailor-made solutions

SICK
Sensor Intelligence