SICK.COM

DATA SHEET

# VL180-2P32438

V180
Photoelectric sensors

Sensor Intelligence

Illustration may differ

## PHOTOELECTRIC SENSORS

# VL180-2P32438

### ORDERING INFORMATION

| Type | part no. |
|---|---|
| VL180-2P32438 | 6044033 |

Further device versions and accessories at www.sick.com/V180

## DETAILED TECHNICAL DATA

### FEATURES

| | |
|---|---|
| Functional principle | Photoelectric retro-reflective sensor |
| Functional principle detail | With minimum distance to reflector (dual lens system) |
| Dimensions (W x H x D) | 18 mm x 18 mm x 84.2 mm |
| Housing design (light emission) | Cylindrical |
| Housing length | 84.2 mm |
| Optical axis | Radial |
| Sensing range max. | 0.05 m ... 5.5 m [1] |
| Sensing range | 0.05 m ... 4.5 m [1] |
| Focus | Approx. 4.5° |
| Type of light | Visible red light |
| Light source | LED [2] |
| Light spot size (distance) | Ø 270 mm (4 m) |
| Angle of dispersion | Approx. 4.5° |
| Wave length | 645 nm |
| Adjustment | Potentiometer, 270° (Sensitivity) |

[1] Reflector PL80A.

[2] Average service life: 100,000 h at $T_u$ = +25 °C.

## MECHANICS/ELECTRONICS

| | |
|---|---|
| Supply voltage $U_B$ | 10 V DC ... 30 V DC [1] |
| Ripple | ± 10 % [2] |
| Current consumption | 30 mA [3] |
| Switching output | PNP |
| Switching mode | Dark switching |
| Signal voltage PNP HIGH/LOW | Approx. $V_S$ – 1.8 V / 0 V |
| Output current $I_{max.}$ | ≤ 100 mA |
| Response time | ≤ 0.5 ms [4] |
| Switching frequency | 1,000 Hz [5] |
| Connection type | Connector M12, 3-pin |
| Circuit protection | A [6]<br>B [7]<br>D [8] |
| Protection class | III |
| Weight | 18 g |
| Polarizing filter | ✓ |
| Housing material | Plastic, PBT/PC |
| Optics material | Plastic, PMMA |
| Enclosure rating | IP67 |
| Items supplied | Reflector P250 |
| Ambient operating temperature | –25 °C ... +55 °C |
| Ambient temperature, storage | –40 °C ... +70 °C |

[1] Limit values when operated in short-circuit protected network: max. 8 A.

[2] May not fall below or exceed $U_V$ tolerances.

[3] Without load.

[4] Signal transit time with resistive load.

[5] With light/dark ratio 1:1.

[6] A = $V_S$ connections reverse-polarity protected.

[7] B = inputs and output reverse-polarity protected.

[8] D = outputs overcurrent and short-circuit protected.

## SAFETY-RELATED PARAMETERS

| | |
|---|---|
| $MTTF_D$ | 1,982 years |
| $DC_{avg}$ | 0 % |

## CERTIFICATES

| | |
|---|---|
| EU declaration of conformity | ✓ |
| UK declaration of conformity | ✓ |
| ACMA declaration of conformity | ✓ |
| Moroccan declaration of conformity | ✓ |
| China RoHS | ✓ |
| China Compulsory Product Certification (CCC) exempt | ✓ |
| cULus certificate | ✓ |

| | |
|---|---|
| Photobiological safety (DIN EN 62471) certificate | ✓ |

## ADJUSTMENTS

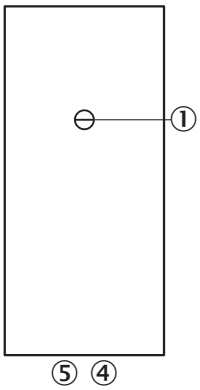


③ sensitivity control 270°
④ LED indicator orange: switching output active
⑤ LED indicator green

## CONNECTION TYPE

## CONNECTION DIAGRAM

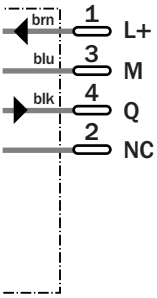


## CONNECTION DIAGRAM CD-066

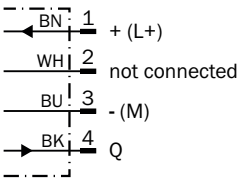

**CHARACTERISTIC CURVE VL180-2, 5.5 M, RADIAL**

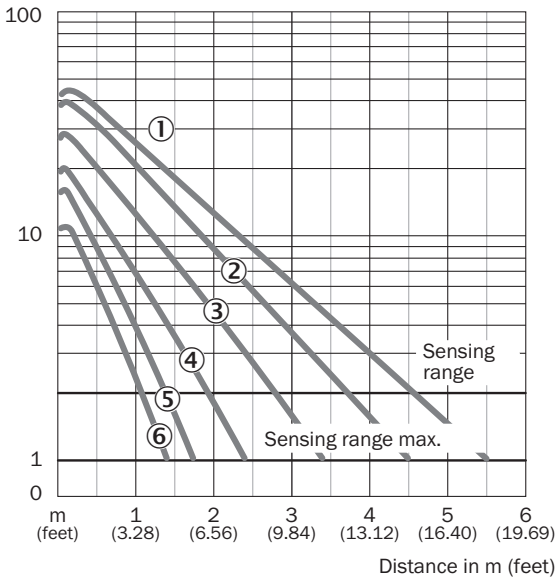


① Reflector PL80A
② Reflector P250, PL40A, PL50A, C110A
③ Reflector PL30A, PL31A
④ Reflector PL20A
⑤ P45
⑥ Reflective tape Diamond Grade

**LIGHT SPOT SIZE VL180-2**

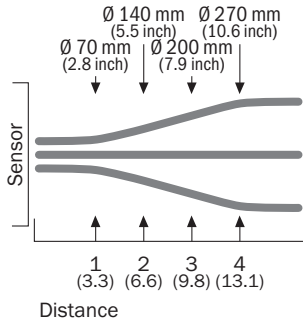

**SENSING RANGE DIAGRAM VL180-2, 5.5 M, RADIAL**

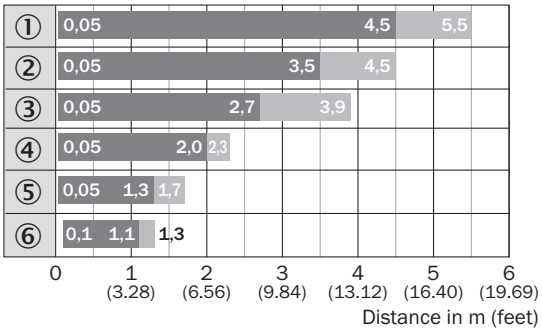


Sensing range  Sensing range max.

① Reflector PL80A
② Reflector P250, PL40A, PL50A, C110A
③ Reflector PL30A, PL31A
④ Reflector PL20A
⑤ P45
⑥ Reflective tape Diamond Grade

**DIMENSIONAL DRAWING VL180-2, PLASTIC, RADIAL**

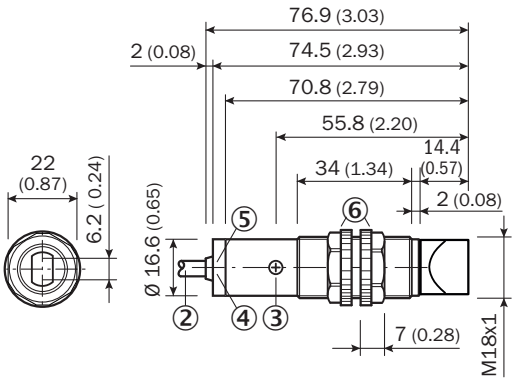


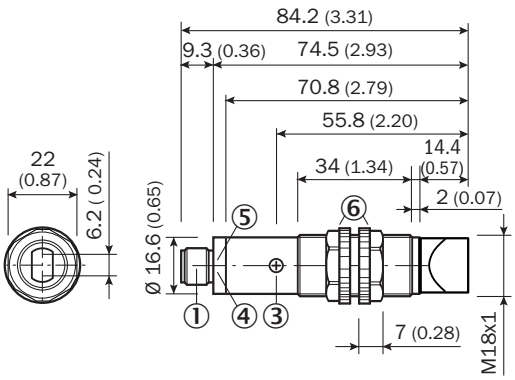


Dimensions in mm (inch)
① Connector M12
② Connection cable 2 m
③ sensitivity control: potentiometer 270°
④ LED indicator orange: switching output active
⑤ LED indicator green, stability indicator: LED lights continuously = light reception < 0.9/> 1.1; LED off = light reception > 0.9 / < 1.1
⑥ fastening nuts (2 x); A/F 22, PC

Further information as well as suitable accessories, example applications and downloads such as CAD dimensional models, operating instructions and software can be found at www.sick.com/6044033

SICK AG
WALDKIRCH
GERMANY
SICK.COM

# SICK AT A GLANCE

SICK is a leading global technology company for intelligent sensors and integrated solutions in industrial automation. Our technologies set benchmarks, making your industrial processes more efficient, safer and more sustainable – both in logistics and manufacturing operations.

SICK combines sensor intelligence with industry expertise and certified consulting services. We provide the ideal foundation for scalable as well as tailor-made automation solutions and create added value along the entire value chain. Our close partnerships with our customers are more than just a promise: Together, we optimize productivity, improve quality, protect health and safety, and help build a sustainable future. All with empathy and trust.

Since 1946, we have been developing innovative technologies with passion and a pioneering spirit. With a global network in around 40 countries, SICK has a global presence and is always close by. The company's headquarters are located in Waldkirch near Freiburg, Germany. Our customers benefit from our understanding of both local and global requirements, which enables us to deliver tailor-made solutions

SICK
Sensor Intelligence