SICK.COM

DATA SHEET

DGS80B-TSLK04096

DGS80/90
Incremental encoders

SICK Sensor Intelligence

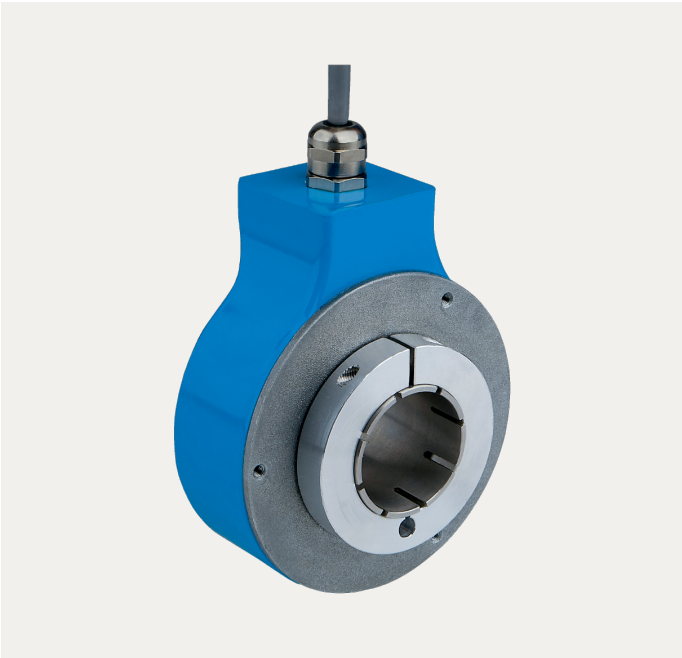

Illustration may differ

INCREMENTAL ENCODERS

DGS80B-TSLK04096

ORDERING INFORMATION

Type	part no.
DGS80B-TSLK04096	1118705

Further device versions and accessories at www.sick.com/DGS80_90

DETAILED TECHNICAL DATA

SAFETY-RELATED PARAMETERS

$MTTF_D$ (mean time to dangerous failure)	518 years (EN ISO 13849-1) [1]

[1] This product is a standard product and does not constitute a safety component as defined in the Machinery Directive. Calculation based on nominal load of components, average ambient temperature 40°C, frequency of use 8760 h/a. All electronic failures are considered hazardous. For more information, see document no. 8015532.

PERFORMANCE

Pulses per revolution	4,096
Measuring step	90°, electric/pulses per revolution
Measuring step deviation	± 15° electrical
Duty cycle	≤ 0.5 ± 15 %

INTERFACES

Communication interface	Incremental
Communication Interface detail	HTL / Push pull
Number of signal channels	6-channel
Initialization time	< 50 ms
Output frequency	≤ 300 kHz
Load current	≤ 40 mA, per channel
Operating current	≤ 50 mA (without load)
Power consumption	≤ 0.85 W

ELECTRONICS

Connection type	Cable, 8-wire, radial, 1.5 m
Supply voltage	5 ... 30 V
Reference signal, position	90°, electric, logically gated with A and B

Reverse polarity protection	✓
Short-circuit protection of the outputs	✓

MECHANICS

Mechanical design	Through hollow shaft
Shaft diameter	30 mm Front clamp [1]
Flange type / stator coupling	1-sided stator coupling with slot available for order as accessory
Weight	650 g
Shaft material	Aluminum
Flange material	ZAMAC die cast
Housing material	ZAMAC die cast
Material, cable	PUR
Shaft sealing ring material	FKM70
Material, cable gland	Nickel-plated brass
Start up torque	6 Ncm (+20 °C)
Operating torque	5 Ncm (+20 °C)
Permissible shaft loading	100 N (radial) 100 N (axial)
Operating speed	≤ 3,600 min^{-1}
Moment of inertia of the rotor	408 gcm^2
Bearing lifetime	10^9 revolutions

[1] Collets (shaft reducer) available as accessories to reduce shaft sizes under 30 mm / 42 mm.

AMBIENT DATA

EMC	According to EN 61000-6-2 and EN 61000-6-3
Enclosure rating	IP65 (IEC 60529)
Permissible relative humidity	98 % (Condensation not permitted)
Operating temperature range	–25 °C ... +85 °C
Storage temperature range	–25 °C ... +85 °C, without package
Resistance to shocks	250 g, 6 ms (EN 60068-2-27)
Resistance to vibration	10 g, 5 Hz ... 2,000 Hz (EN 60068-2-6)

CERTIFICATES

EU declaration of conformity	✓
UK declaration of conformity	✓
ACMA declaration of conformity	✓
China RoHS	✓
cRUus certificate	✓
Information according to Art. 3 of Data Act (Regulation EU 2023/2854)	✓

DIMENSIONAL DRAWING BORE HOLE SIZE 30 MM, CABLE

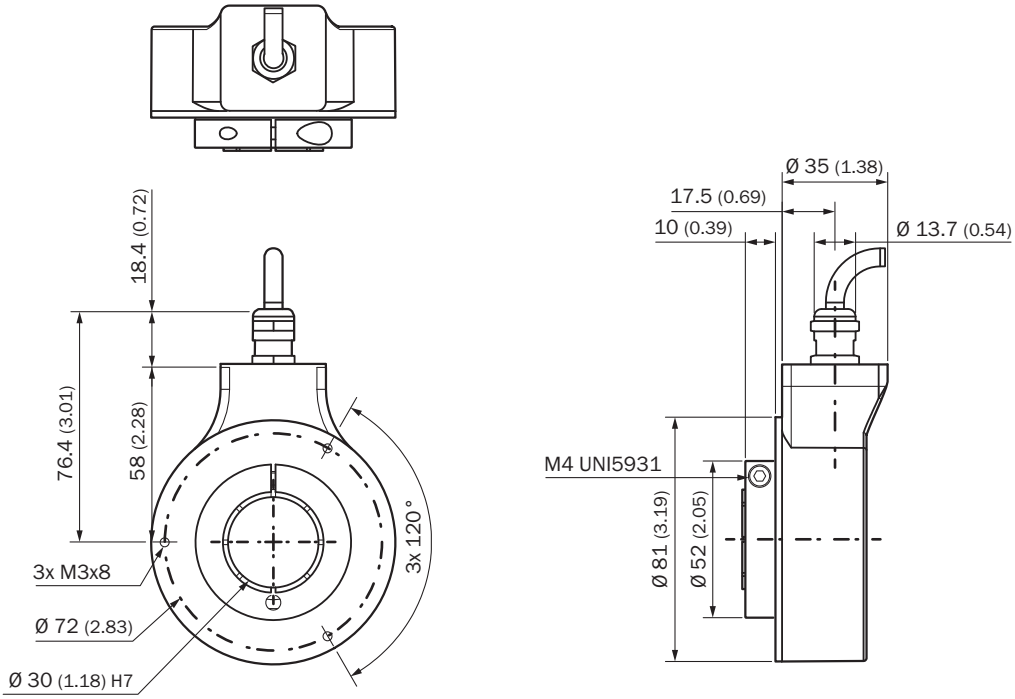

Dimensions in mm (inch)

ANSCHLUSSBELEGUNG

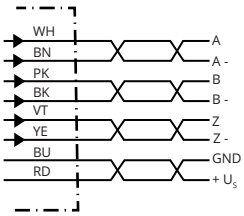

Wire colors (cable connection)	PINMale connector M12, 8-pin	PINMale connector M23, 12-pin	PINMS male connector, 10-pin	Signal	Explanation
Brown	1	6	H	A-	Signal cable
White	2	5	A	A	Signal cable
Black	3	1	I	B-	Signal cable
Pink	4	8	B	B	Signal cable
Yellow	5	4	J	Z-	Signal cable
Purple	6	3	C	Z	Signal cable
Blue	7	10	F	GND	Ground connection
Red	8	12	D	$+U_s$	Supply voltage
-	-	2	E	N.c.	Not connected
-	-	7	-	N.c.	Not connected
-	-	-	G	Housing	Housing
-	-	9	-	N.c.	Not connected
-	-	11	-	N.c.	Not connected
Shielding	–	–	–	Shielding	Screen connected to housing on encoder side

Further information as well as suitable accessories, example applications and downloads such as CAD dimensional models, operating instructions and software can be found at www.sick.com/1118705

SICK AG
WALDKIRCH
GERMANY
SICK.COM

SICK AT A GLANCE

SICK is a leading global technology company for intelligent sensors and integrated solutions in industrial automation. Our technologies set benchmarks, making your industrial processes more efficient, safer and more sustainable – both in logistics and manufacturing operations.

SICK combines sensor intelligence with industry expertise and certified consulting services. We provide the ideal foundation for scalable as well as tailor-made automation solutions and create added value along the entire value chain. Our close partnerships with our customers are more than just a promise: Together, we optimize productivity, improve quality, protect health and safety, and help build a sustainable future. All with empathy and trust.

Since 1946, we have been developing innovative technologies with passion and a pioneering spirit. With a global network in around 40 countries, SICK has a global presence and is always close by. The company's headquarters are located in Waldkirch near Freiburg, Germany. Our customers benefit from our understanding of both local and global requirements, which enables us to deliver tailor-made solutions

SICK
Sensor Intelligence