SICK.COM



DATA SHEET

ARS20-2FK08192

ARS20
Absolute encoders

SICK Sensor Intelligence

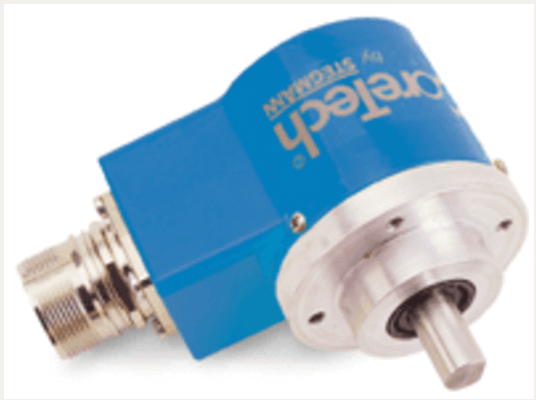

Illustration may differ

ABSOLUTE ENCODERS

ARS20-2FK08192

ORDERING INFORMATION

Type	part no.
ARS20-2FK08192	7101934

Further device versions and accessories at www.sick.com/ARS20

DETAILED TECHNICAL DATA

PERFORMANCE

Number of steps per revolution (max. resolution)	8,192 (13 bit)
Measuring step deviation	0.005° binary number of steps 0.016° non-binary number of steps
Error limits G	0.035° (binary number of steps) [1] 0.046° (non-binary number of steps) [2]
Repeatability standard deviation σ_r	0.005°

[1] In accordance with DIN ISO 1319-1, position of the upper and lower error limit depends on the installation situation, specified value refers to a symmetrical position, i.e. deviation in upper and lower direction is the same.

[2] In accordance with DIN ISO 55350-13; 68.3% of the measured values are inside the specified area.

INTERFACES

Communication interface	SSI
Communication Interface detail	SSI + incremental / Open Collector
Initialization time	40 ms
Code type	Gray
Code sequence parameter adjustable	CW (clockwise) [1]
Measured value backlash	0.005°
Response threshold	0.003°

[1] Increasing when viewing the clockwise rotating shaft.

ELECTRICAL DATA

Connection type	Cable, radial, 1.5 m
Supply voltage	8 ... 24 V
Operating current	60 mA

[1] Only with shaft stationary (note initialisation time).

Switching level of control inputs	Logic H = 0.7 x U_s, Logic L = 0 V ... 0.3 x U_s
Actuation of set button	≥ 100 ms [1]

[1] Only with shaft stationary (note initialisation time).

MECHANICAL DATA

Mechanical design	Solid shaft, Square flange
Shaft diameter	3/8″
Weight	Approx. 0.22 kg [1]
Start up torque	3.4 Ncm
Operating torque	2.6 Ncm
Permissible shaft loading	20 N (radial) 10 N (axial)
Operating speed	≤ 6,000 min^{-1} with shaft seal ≤ 10,000 min^{-1} without shaft seal
Moment of inertia of the rotor	54 gcm^2
Bearing lifetime	3.6 x 10^9 revolutions
Angular acceleration	≤ 500,000 rad/s^2

[1] Based on encoder with male connector.

AMBIENT DATA

EMC	According to EN 61000-6-2 and EN 61000-6-3
Enclosure rating	IP66 (IEC 60529)
Permissible relative humidity	90 % (Condensation not permitted)
Operating temperature range	–20 °C ... +85 °C
Storage temperature range	–40 °C ... +100 °C
Resistance to shocks	50 g, 11 ms (EN 60068-2-27)
Resistance to vibration	20 g, 10 Hz ... 150 Hz (EN 60068-2-6)

DIMENSIONAL DRAWING

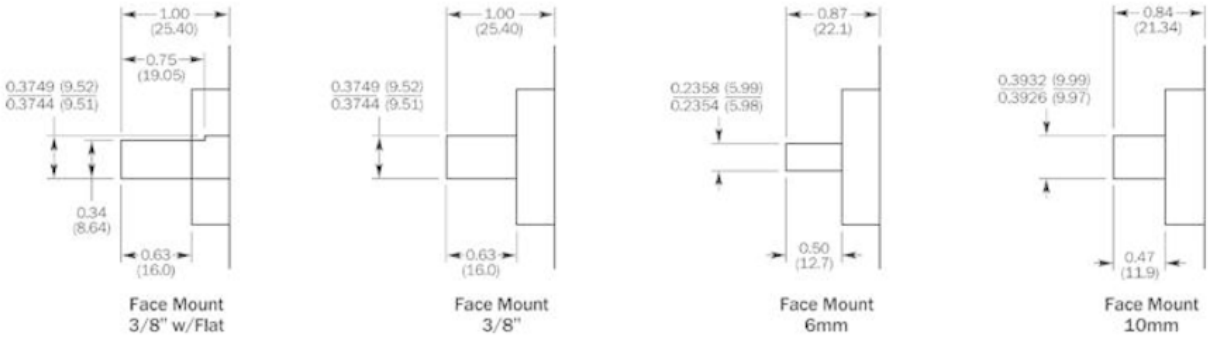

Dimensions in mm (inch)

DIMENSIONAL DRAWING

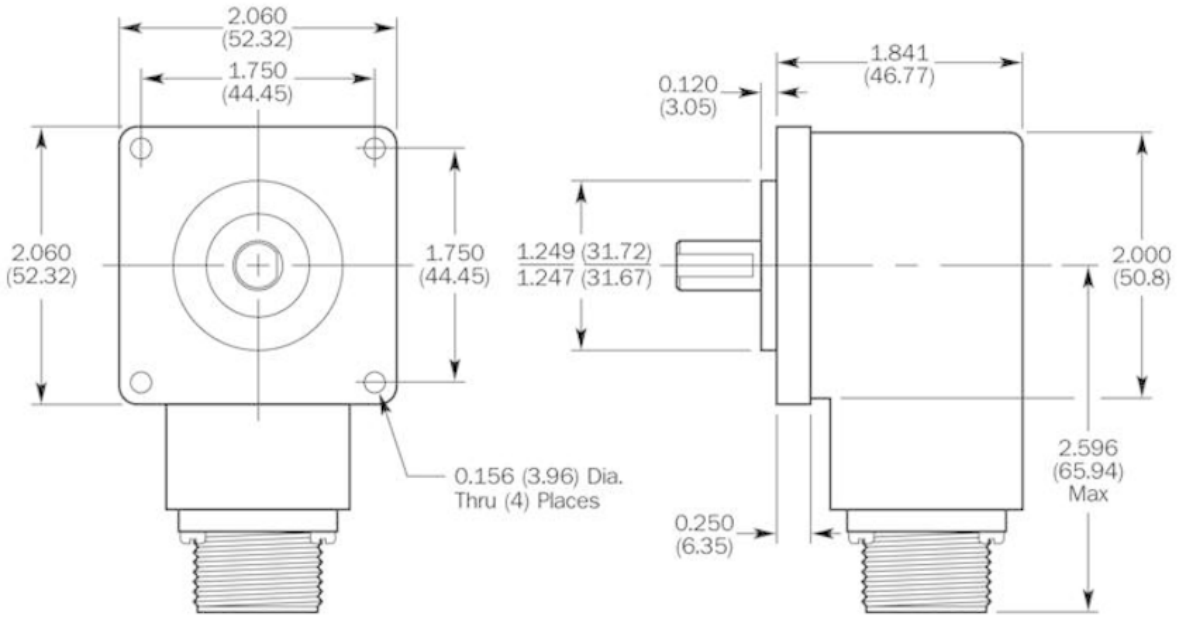

Dimensions in mm (inch)

Further information as well as suitable accessories, example applications and downloads such as CAD dimensional models, operating instructions and software can be found at www.sick.com/7101934



SICK AG
WALDKIRCH
GERMANY
SICK.COM

SICK AT A GLANCE

SICK is a leading global technology company for intelligent sensors and integrated solutions in industrial automation. Our technologies set benchmarks, making your industrial processes more efficient, safer and more sustainable – both in logistics and manufacturing operations.

SICK combines sensor intelligence with industry expertise and certified consulting services. We provide the ideal foundation for scalable as well as tailor-made automation solutions and create added value along the entire value chain. Our close partnerships with our customers are more than just a promise: Together, we optimize productivity, improve quality, protect health and safety, and help build a sustainable future. All with empathy and trust.

Since 1946, we have been developing innovative technologies with passion and a pioneering spirit. With a global network in around 40 countries, SICK has a global presence and is always close by. The company's headquarters are located in Waldkirch near Freiburg, Germany. Our customers benefit from our understanding of both local and global requirements, which enables us to deliver tailor-made solutions

SICK

Sensor Intelligence