SICK.COM

DATA SHEET

# IM08-03BPS-VT1

IMI
Inductive proximity sensors

SICK Sensor Intelligence

Illustration may differ

## INDUCTIVE PROXIMITY SENSORS

# IM08-03BPS-VT1

### ORDERING INFORMATION

| Type | part no. |
|---|---|
| IM08-03BPS-VT1 | 6068715 |

Further device versions and accessories at www.sick.com/IMI

## DETAILED TECHNICAL DATA

### FEATURES

| | |
|---|---|
| Housing | Metric |
| Thread size | M8 x 1 |
| Diameter | Ø 8 mm |
| Pressure resistance | ≤ 100 bar |
| Sensing range $S_n$ | 3 mm |
| Safe sensing range $S_a$ | 2.43 mm |
| Installation type | Flush |
| Switching frequency | 1,200 Hz |
| Connection type | Connector M8, 3-pin |
| Switching output | PNP |
| Switching output detail | PNP |
| Output function | NO |
| Electrical wiring | DC 3-wire |
| Enclosure rating | IP68 [1]<br>IP69K |
| Special features | Sensing face made of stainless steel V2A, Resistant against coolant lubricants, triple sensing range, Visual adjustment indicator |
| Special applications | Zones with coolants and lubricants, Difficult application conditions |
| Items supplied | Mounting nut, V2A stainless steel (2x)<br>Washer, V2A stainless steel, with locking teeth (2x) |

[1] According to EN 60529.

## MECHANICS/ELECTRONICS

| | |
|---|---|
| Supply voltage | 10 V DC ... 30 V DC |
| Ripple | ≤ 20 % [1] |
| Voltage drop | ≤ 2 V [2] |
| Time delay before availability | ≤ 10 ms |
| Hysteresis | 1 % ... 20 % |
| Reproducibility | ≤ 5 % [3] [4] |
| Temperature drift (of $S_r$) | ≤ 10 % |
| EMC | According to EN 60947-5-2 |
| Continuous current $I_a$ | ≤ 200 mA |
| Short-circuit protection | ✓ |
| Power-up pulse protection | ✓ |
| Shock and vibration resistance | 30 g, 11 ms / 10 ... 55 Hz, 1 mm |
| Ambient operating temperature | –25 °C ... +85 °C |
| Housing material | Stainless steel V2A, DIN 1.4305 / AISI 303 |
| Sensing face material | Stainless steel V2A, DIN 1.4305 / AISI 303 |
| Housing length | 60 mm |
| Thread length | 45.5 mm |
| Tightening torque, max. | ≤ 8 Nm |
| Protection class | III |
| UL File No. | E191603 |

[1] Of $V_s$.

[2] At $I_a$ max.

[3] Of Sr.

[4] UB = 20 V DC ... 30 V DC, TA = 23 °C ± 5 °C.

## COMMUNICATION INTERFACE

| | |
|---|---|
| Communication interface | IO-Link V1.0 |
| Communication Interface detail | COM2 (38,4 kBaud) |
| Process data length | 1 Byte |
| Process data structure | Bit 0 = Sr reached |
| Process data structure A | Bit 1 = Sa reached |

## REDUCTION FACTORS

| | |
|---|---|
| Note | The values are reference values which may vary |
| St37 steel (Fe) | Approx. 1 |
| Stainless steel (V4A, 316L) | Approx. 0.4 [1] |
| Aluminum (Al) | Approx. 1 |
| Copper (Cu) | Approx. 0.9 |
| Brass (Br) | Approx. 1.3 |

[1] Material thickness/Reduction factor: 1 mm/0.4  2 mm/0.8.

## INSTALLATION NOTE

| | |
|---|---|
| Remark | Associated graphic see "Installation" |
| B | 14 mm |
| C | 6 mm |

| | |
|---|---|
| D | 6 mm |
| F | 30 mm |

## CERTIFICATES

| | |
|---|---|
| EU declaration of conformity | ✓ |
| UK declaration of conformity | ✓ |
| ACMA declaration of conformity | ✓ |
| Moroccan declaration of conformity | ✓ |
| China RoHS | ✓ |
| Information according to Art. 3 of Data Act (Regulation EU 2023/2854) | ✓ |

## INSTALLATION NOTE FLUSH INSTALLATION

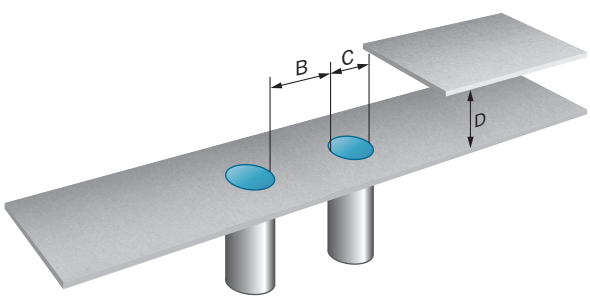


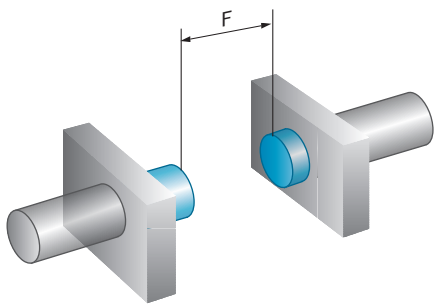


## CONNECTION DIAGRAM CD-453

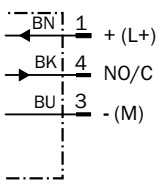

## RESPONSE DIAGRAM

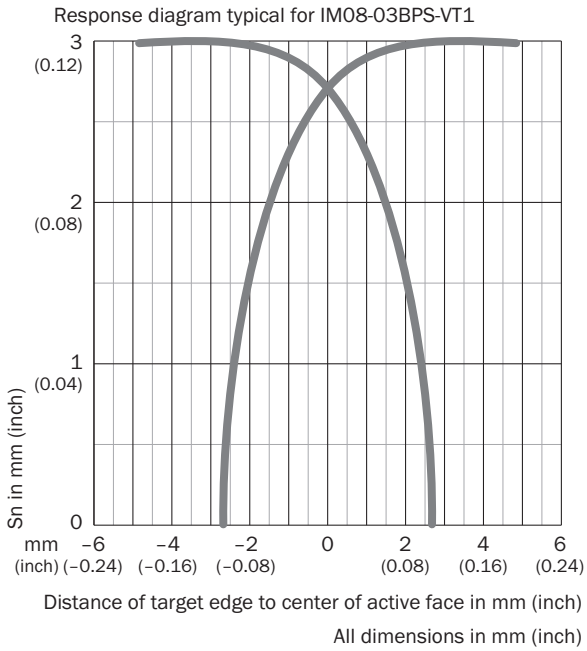


## FUNCTIONAL PRINCIPLE INSTALLATION AID

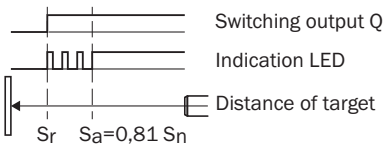


## DIMENSIONAL DRAWING IM08 INOX, FLUSH

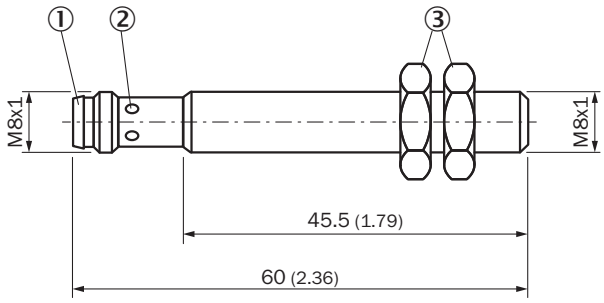


Dimensions in mm (inch)
① Connection
② Display LED
③ Fastening nuts (2 x); width across 13, stainless steel V2A

Further information as well as suitable accessories, example applications and downloads such as CAD dimensional models, operating instructions and software can be found at www.sick.com/6068715

SICK AG
WALDKIRCH
GERMANY
SICK.COM

# SICK AT A GLANCE

SICK is a leading global technology company for intelligent sensors and integrated solutions in industrial automation. Our technologies set benchmarks, making your industrial processes more efficient, safer and more sustainable – both in logistics and manufacturing operations.

SICK combines sensor intelligence with industry expertise and certified consulting services. We provide the ideal foundation for scalable as well as tailor-made automation solutions and create added value along the entire value chain. Our close partnerships with our customers are more than just a promise: Together, we optimize productivity, improve quality, protect health and safety, and help build a sustainable future. All with empathy and trust.

Since 1946, we have been developing innovative technologies with passion and a pioneering spirit. With a global network in around 40 countries, SICK has a global presence and is always close by. The company's headquarters are located in Waldkirch near Freiburg, Germany. Our customers benefit from our understanding of both local and global requirements, which enables us to deliver tailor-made solutions

SICK
Sensor Intelligence