SICK.COM

DATA SHEET

WT24-2R548

W24
Photoelectric sensors

SICK Sensor Intelligence

Illustration may differ

PHOTOELECTRIC SENSORS

WT24-2R548

ORDERING INFORMATION

Type	part no.
WT24-2R548	1018318

Further device versions and accessories at www.sick.com/W24

DETAILED TECHNICAL DATA

FEATURES

Functional principle	Photoelectric proximity sensor
Functional principle detail	Background suppression
Dimensions (W x H x D)	27 mm x 87.5 mm x 65 mm
Housing design (light emission)	Rectangular
Sensing range max.	100 mm ... 1,200 mm [1]
Sensing range	100 mm ... 1,200 mm [1]
Type of light	Visible red light
Light source	LED [2]
Light spot size (distance)	Ø 40 mm (1,200 mm)
Adjustment	Potentiometer

[1] Object with 90% remission (based on standard white, DIN 5033).

[2] Average service life: 100,000 h at T_U = +25 °C.

MECHANICS/ELECTRONICS

Supply voltage U_B	20 V AC/DC ... 250 V AC/DC
Power consumption	< 2 VA
Switching output	Relay, electrically isolated [1]
Output function	Change-over contacts
Switching mode	Light/dark switching [1]

[1] Provide suitable spark suppression for inductive or capacitive loads.

[2] With light/dark ratio 1:1.

[3] A = V_S connections reverse-polarity protected.

[4] C = interference suppression.

[5] Rated voltage: 250 V AC/DC.

Switching mode selector	Selectable via light/dark selector
Switching current (switching voltage)	2,5 A @ 250 V AC, 2,5 A @ 24 V DC, 0,125 A @ 250 V DC
Response time	≤ 10 ms
Switching frequency	10 Hz [2]
Connection type	Mini connector 7/8", 5-pin
Circuit protection	A [3] C [4]
Protection class	II [5]
Weight	330 g
Housing material	Metal, zinc diecast
Optics material	Plastic, PMMA
Enclosure rating	IP67
Usage category	AC-15, DC-13 According to EN 60947-1
Ambient operating temperature	–40 °C ... +60 °C
Ambient temperature, storage	–40 °C ... +75 °C

[1] Provide suitable spark suppression for inductive or capacitive loads.

[2] With light/dark ratio 1:1.

[3] A = V_s connections reverse-polarity protected.

[4] C = interference suppression.

[5] Rated voltage: 250 V AC/DC.

SAFETY-RELATED PARAMETERS

$MTTF_D$	509 years
DC_{avg}	0 %
T_M (mission time)	20 years

CERTIFICATES

EU declaration of conformity	✓
UK declaration of conformity	✓
ACMA declaration of conformity	✓
Moroccan declaration of conformity	✓
China RoHS	✓
CCC certificate	✓
cULus certificate	✓
Photobiological safety (DIN EN 62471) certificate	✓

ADJUSTMENTS WT24-2, WL24-2, WS/WE24-2, AC/DC

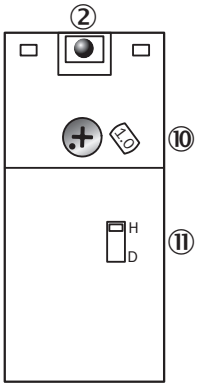

② LED signal strength indicator
⑩ Adjustment sensing range (WT) / sensitivity (WL, WS/WE)
⑪ Light/dark selector

CONNECTION DIAGRAM CD-194

WT24-2R518, WT24-2R548

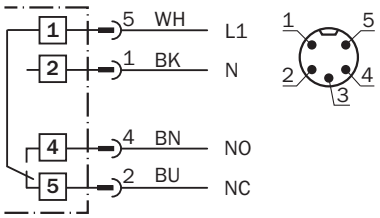

WT24-2R519, WT24-2R549

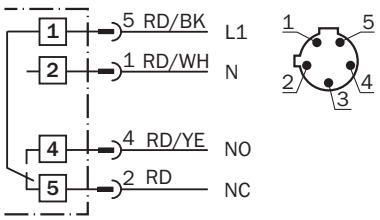

CHARACTERISTIC CURVE WT24-2, RED LIGHT

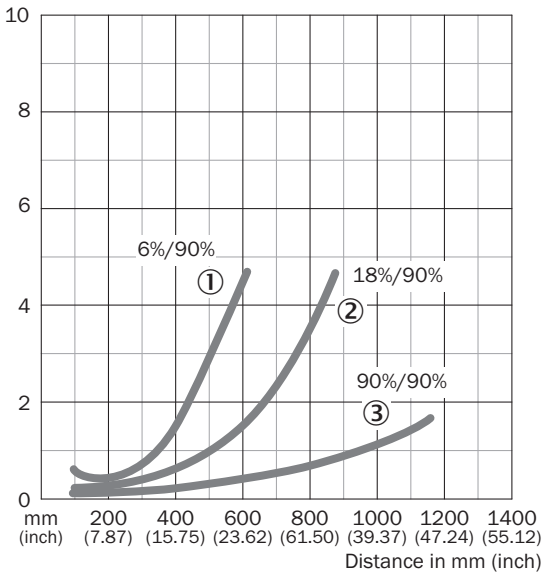

① Sensing range on black, 6% remission factor
② Sensing range on gray, 18% remission factor
③ Sensing range on white, 90% remission factor

SENSING RANGE DIAGRAM WT24-2, RED LIGHT

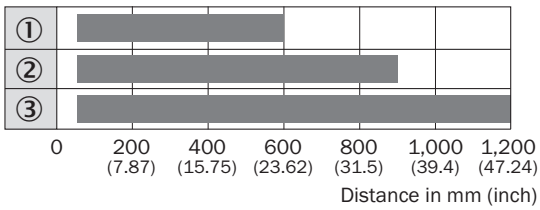

Sensing range

① Sensing range on black, 6% remission factor
② Sensing range on gray, 18% remission factor
③ Sensing range on white, 90% remission factor

DIMENSIONAL DRAWING WT24-2

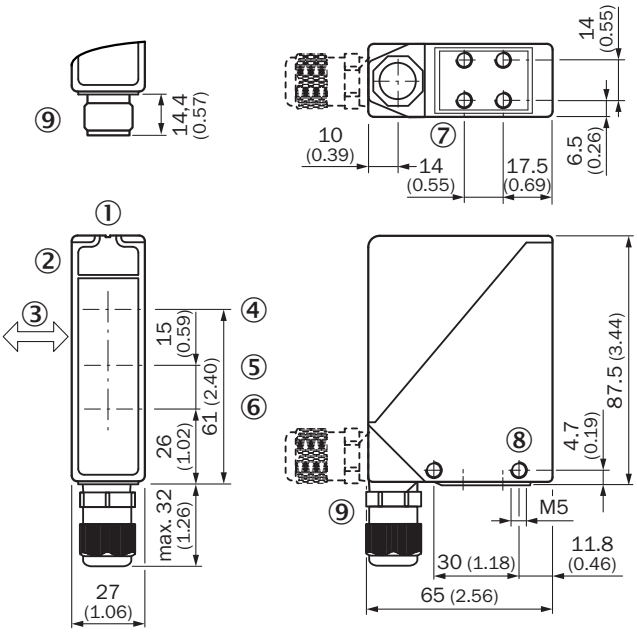

Dimensions in mm (inch)
① Alignment sight
② LED signal strength indicator
③ Standard direction of the material being detected
④ Center of optical axis, sender
⑤ Center of optical axis, receiver (close range)
⑥ Center of optical axis, receiver (far range)
⑦ M5 threaded mounting hole, 6 mm deep
⑧ M5 threaded mounting hole, through-hole
⑨ M16 screw fixing and plug rotatable by 90°

Further information as well as suitable accessories, example applications and downloads such as CAD dimensional models, operating instructions and software can be found at www.sick.com/1018318

SICK AG
WALDKIRCH
GERMANY
SICK.COM

SICK AT A GLANCE

SICK is a leading global technology company for intelligent sensors and integrated solutions in industrial automation. Our technologies set benchmarks, making your industrial processes more efficient, safer and more sustainable – both in logistics and manufacturing operations.

SICK combines sensor intelligence with industry expertise and certified consulting services. We provide the ideal foundation for scalable as well as tailor-made automation solutions and create added value along the entire value chain. Our close partnerships with our customers are more than just a promise: Together, we optimize productivity, improve quality, protect health and safety, and help build a sustainable future. All with empathy and trust.

Since 1946, we have been developing innovative technologies with passion and a pioneering spirit. With a global network in around 40 countries, SICK has a global presence and is always close by. The company's headquarters are located in Waldkirch near Freiburg, Germany. Our customers benefit from our understanding of both local and global requirements, which enables us to deliver tailor-made solutions

SICK
Sensor Intelligence