SICK.COM

DATA SHEET

WLL170-2P430

WLL170
Fiber-optic sensors

SICK Sensor Intelligence

Illustration may differ

FIBER-OPTIC SENSORS

WLL170-2P430

ORDERING INFORMATION

Type	part no.
WLL170-2P430	6029514

Further device versions and accessories at www.sick.com/WLL170

DETAILED TECHNICAL DATA

FEATURES

Device type	Fiber-optic amplifier
Dimensions (W x H x D)	10.5 mm x 35.5 mm x 83.7 mm
Housing design (light emission)	Rectangular
Sensing range max.	0 mm ... 4,000 mm (Through-beam system) [1]
Sensing range	0 mm ... 160 mm, Proximity system [2] [3] 0 mm ... 700 mm, Through-beam system [4]
Focus	Approx. 65° [5]
Type of light	Visible red light
Light source	LED [6]
Angle of dispersion	Approx. 65° [5]
Wave length	660 nm
Adjustment	Potentiometer, 10 turns
Indication	LED

[1] LL3-TB02 and tip adapter LL3-TA01.

[2] Objects to be sensed with 90% reflectivity (based on DIN 5033 white standard). Sensing range depends on fiber-optic cable.

[3] LL3-DK06.

[4] LL3-TB01.

[5] See LL3 fiber-optic data.

[6] Average service life: 100,000 h at T_u = +25 °C.

MECHANICS/ELECTRONICS

Supply voltage U_B	10 V DC ... 30 V DC [1]
Ripple	10 % [2]
Current consumption	30 mA [3]
Switching output	PNP
Number of switching outputs	1
Switching mode	Light/dark switching
Switching mode selector	Selectable via light/dark selector
Response time	≤ 250 µs [4]
Switching frequency	2,000 Hz [5]
Time functions	Off delay
Delay time	Selectable by sliding switch, ≤ 40 ms
Input	-
Connection type	Male connector M8, 4-pin
Circuit protection	A [6] B [7] C [8] D [9]
Protection class	III
Weight	70 g
Housing material	Plastic, ABS/PC
Enclosure rating	IP66 [10]
Items supplied	BEF-WLL170 mounting bracket
Ambient operating temperature	–25 °C ... +55 °C
Ambient temperature, storage	–40 °C ... +70 °C
UL File No.	NRKH.E300503 & NRKH7.E300503

[1] Limit values.

[2] May not fall below or exceed U_v tolerances.

[3] Without load.

[4] Signal transit time with resistive load.

[5] With light/dark ratio 1:1.

[6] A = V_s connections reverse-polarity protected.

[7] B = inputs and output reverse-polarity protected.

[8] C = interference suppression.

[9] D = outputs overcurrent and short-circuit protected.

[10] With correctly attached fibre-optic cable LL3 and closed protection hood.

SAFETY-RELATED PARAMETERS

$MTTF_D$	836 years
DC_{avg}	0 %

ADJUSTMENTS WLL170-2

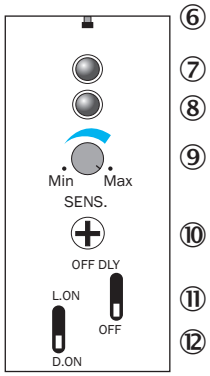

⑥ indicating pin correctly inserted LL3 fiber
⑦ LED indicator orange, lights up when switching output is active
⑧ LED signal strength indicator green, lights up, when light received< 0.9 or >1.1 (switching threshold = 1)
⑨ Sensitivity scale 270°
⑩ Sensitivity control (10 revolutions)
⑪ OFF delay selector switch: “OFF DLY” (on)/“OFF” (off), 40 ms fixed
⑫ Selector switch: "L.ON" (light switching) /"D.ON" (dark switching)

CONNECTION TYPE

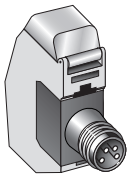

CONNECTION DIAGRAM CD-066

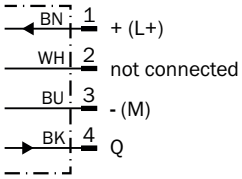

DIMENSIONAL DRAWING WLL170-2

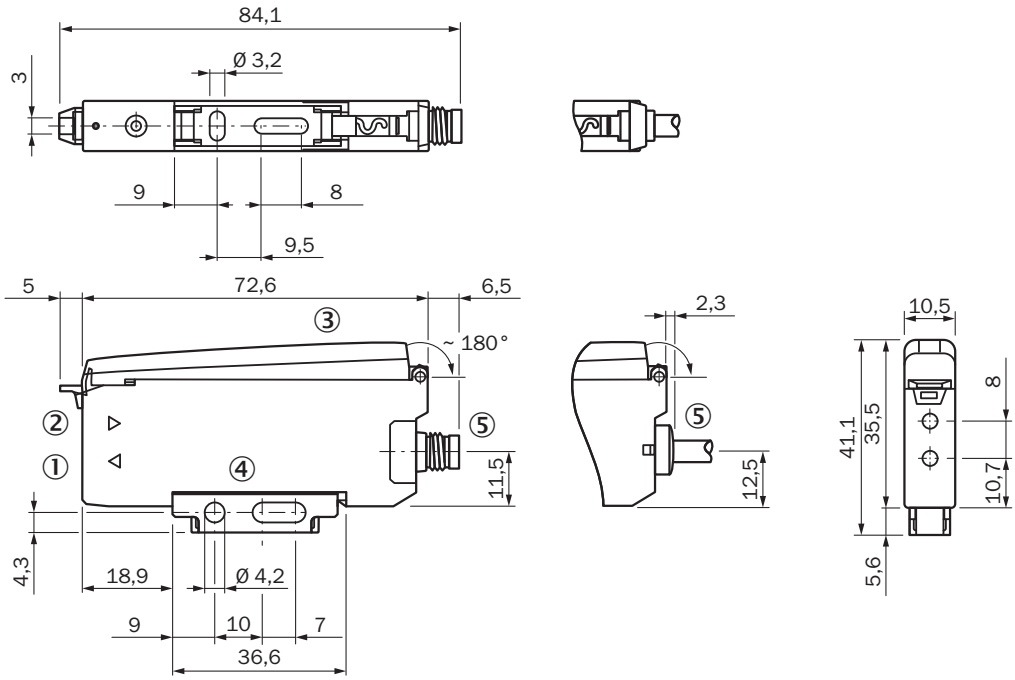

Dimensions in mm (inch)
① Sender LED, installation of LL3 fibre-optic cable (sender fibre)
② Receiver, installation of LL3 fibre optic cable (receiver fibre)
③ Protective hood, can be raised at both ends
④ Mounting bracket, included with delivery
⑤ Connection

Further information as well as suitable accessories, example applications and downloads such as CAD dimensional models, operating instructions and software can be found at www.sick.com/6029514

SICK AG
WALDKIRCH
GERMANY
SICK.COM

SICK AT A GLANCE

SICK is a leading global technology company for intelligent sensors and integrated solutions in industrial automation. Our technologies set benchmarks, making your industrial processes more efficient, safer and more sustainable – both in logistics and manufacturing operations.

SICK combines sensor intelligence with industry expertise and certified consulting services. We provide the ideal foundation for scalable as well as tailor-made automation solutions and create added value along the entire value chain. Our close partnerships with our customers are more than just a promise: Together, we optimize productivity, improve quality, protect health and safety, and help build a sustainable future. All with empathy and trust.

Since 1946, we have been developing innovative technologies with passion and a pioneering spirit. With a global network in around 40 countries, SICK has a global presence and is always close by. The company's headquarters are located in Waldkirch near Freiburg, Germany. Our customers benefit from our understanding of both local and global requirements, which enables us to deliver tailor-made solutions

SICK
Sensor Intelligence