SICK.COM

DATA SHEET

# WLL260-E240

WLL260
Fiber-optic sensors

SICK Sensor Intelligence

Illustration may differ

## FIBER-OPTIC SENSORS

# WLL260-E240

### ORDERING INFORMATION

| Type | part no. |
|---|---|
| WLL260-E240 | 6020063 |

Further device versions and accessories at www.sick.com/WLL260

## DETAILED TECHNICAL DATA

### FEATURES

| | |
|---|---|
| Device type | Fiber-optic amplifier |
| Device type detail | Stand-alone |
| Dimensions (W x H x D) | 25 mm x 77.8 mm x 63 mm |
| Housing design (light emission) | Rectangular |
| Sensing range max. | 0 mm ... 65 mm (Proximity system) [1) 2)]<br>0 mm ... 110 mm (Proximity system) [1) 3)]<br>0 mm ... 800 mm (Through-beam system) [2)] |
| Sensing range | 0 mm ... 50 mm, Proximity system [2)]<br>0 mm ... 90 mm, Proximity system [3)]<br>0 mm ... 700 mm, Through-beam system [2)] |
| Type of light | Visible red light |
| Light source | LED [4)] |
| Adjustment | Potentiometer, 270° |
| Indication | LED |

[1)] Object with 90% remission (based on standard white, DIN 5033).

[2)] LIS/LIB.

[3)] With special fibre-optic cable.

[4)] Average service life: 100,000 h at $T_U$ = +25 °C.

## MECHANICS/ELECTRONICS

| | |
|---|---|
| Supply voltage $U_B$ | 10 V DC ... 30 V DC [1] |
| Ripple | ≤ 5 $V_{pp}$ [2] |
| Current consumption | 35 mA [3] |
| Switching output | NPN |
| Switching mode | Light/dark switching |
| Switching mode selector | Selectable via light/dark selector |
| Response time | ≤ 0.7 ms [4] |
| Switching frequency | 700 Hz [5] |
| Connection type | Cable gland |
| Circuit protection | A [6]<br>B [7]<br>C [8]<br>D [9] |
| Protection class | II [10] |
| Weight | 120 g |
| Housing material | Plastic, ABS |
| Enclosure rating | IP66 |
| Items supplied | Mounting bracket BEF-W260 |
| Test input sender off | TE to 0 V |
| Ambient operating temperature | –25 °C ... +55 °C |
| Ambient temperature, storage | –40 °C ... +70 °C |
| UL File No. | NRNT2.E128350 & NRNT8.E128350 |

[1] Limit values when operated in short-circuit protected network: max. 8 A.

[2] May not fall below or exceed $U_v$ tolerances.

[3] Without load.

[4] Signal transit time with resistive load.

[5] With light/dark ratio 1:1.

[6] A = $V_s$ connections reverse-polarity protected.

[7] B = inputs and output reverse-polarity protected.

[8] C = interference suppression.

[9] D = outputs overcurrent and short-circuit protected.

[10] Reference voltage: 50 V DC.

## SAFETY-RELATED PARAMETERS

| | |
|---|---|
| $MTTF_D$ | 838 years |
| $DC_{avg}$ | 0 % |

## CERTIFICATES

| | |
|---|---|
| EU declaration of conformity | ✓ |
| UK declaration of conformity | ✓ |
| ACMA declaration of conformity | ✓ |
| Moroccan declaration of conformity | ✓ |
| China RoHS | ✓ |
| China Compulsory Product Certification (CCC) exempt | ✓ |

| | |
|---|---|
| cRUus certificate | ✓ |
| Photobiological safety (DIN EN 62471) certificate | ✓ |

## ADJUSTMENTS

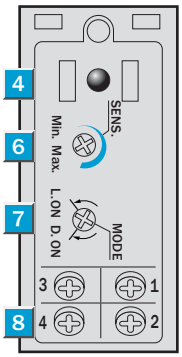


④ LED signal strength indicator, red
⑥ sensitivity control
⑦ Light/ dark rotary switch: L = light switching, D = dark switching

## CONNECTION TYPE

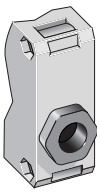

## CONNECTION DIAGRAM CD-123

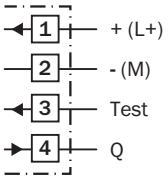

**DIMENSIONAL DRAWING**

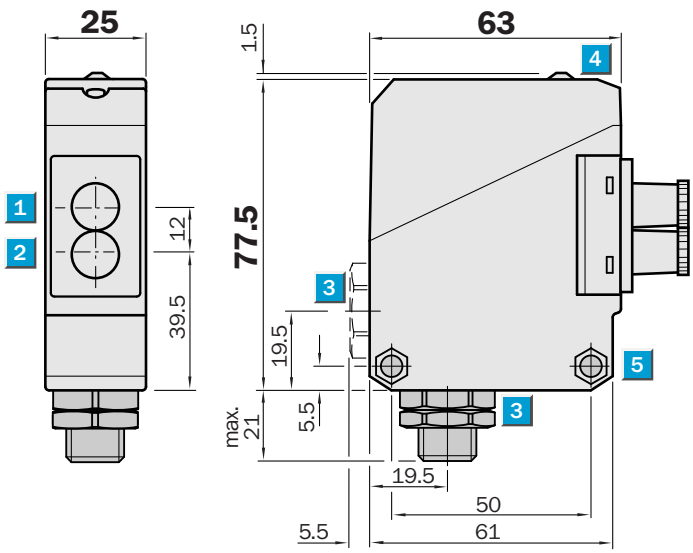


Dimensions in mm (inch)
① Center of optical axis, receiver
② Center of optical axis, sender
③ Cable entry gland 1/2" PF for cable diameter 6 to 10 mm optionally at bottom or rear
④ LED reception indicator, red
⑤ Mounting hole ø 5.2 mm, for M5 hexagon nuts on both sides

Further information as well as suitable accessories, example applications and downloads such as CAD dimensional models, operating instructions and software can be found at www.sick.com/6020063

SICK AG
WALDKIRCH
GERMANY
SICK.COM

# SICK AT A GLANCE

SICK is a leading global technology company for intelligent sensors and integrated solutions in industrial automation. Our technologies set benchmarks, making your industrial processes more efficient, safer and more sustainable – both in logistics and manufacturing operations.

SICK combines sensor intelligence with industry expertise and certified consulting services. We provide the ideal foundation for scalable as well as tailor-made automation solutions and create added value along the entire value chain. Our close partnerships with our customers are more than just a promise: Together, we optimize productivity, improve quality, protect health and safety, and help build a sustainable future. All with empathy and trust.

Since 1946, we have been developing innovative technologies with passion and a pioneering spirit. With a global network in around 40 countries, SICK has a global presence and is always close by. The company's headquarters are located in Waldkirch near Freiburg, Germany. Our customers benefit from our understanding of both local and global requirements, which enables us to deliver tailor-made solutions

SICK
Sensor Intelligence