SICK.COM

DATA SHEET

IMP12-1B5PSVC0F

IMP
Inductive proximity sensors

SICK Sensor Intelligence

Illustration may differ

INDUCTIVE PROXIMITY SENSORS

IMP12-1B5PSVC0F

ORDERING INFORMATION

Type	part no.
IMP12-1B5PSVC0F	6050131

Further device versions and accessories at www.sick.com/IMP

DETAILED TECHNICAL DATA

FEATURES

Housing	Metric
Thread size	M12 x 1
Diameter	Ø 12 mm
Pressure resistance	≤ 500 bar
Sensing range S_n	1.5 mm
Safe sensing range S_a	1.2 mm
Installation type	Flush
Switching frequency	600 Hz
Connection type	Male connector M12, 4-pin
Switching output	PNP
Switching output detail	PNP
Output function	NO
Electrical wiring	DC 3-wire
Enclosure rating	IP68 [1]
Special features	High pressure resistant
Special applications	Hydraulic application

[1] Sensing face.

MECHANICS/ELECTRONICS

Supply voltage	10 V DC ... 30 V DC
Ripple	≤ 20 % [1]
Voltage drop	≤ 2 V [2]
Time delay before availability	≤ 50 ms
Hysteresis	1 % ... 15 % [3]
Reproducibility	≤ 7 % [4] [5]
Temperature drift (of S_r)	≤ 15 %
EMC	According to EN 60947-5-2
Continuous current I_a	≤ 200 mA
Vacuum resistance	10^{-8} Torr [6]
Large sealing ring	5.3 mm x 2.4 mm
Size support ring	10 mm x 5.9 mm x 1 mm
Short-circuit protection	✓
Shock and vibration resistance	30 g, 11 ms / 10 ... 55 Hz, 1 mm
Ambient operating temperature	–25 °C ... +80 °C
Housing material	Stainless steel V2A, DIN 1.4305 / AISI 303
Sensing face material	Ceramics, ZrO2
Sealing ring material	FPM
Housing length	93 mm
Thread length	75 mm
Tightening torque, max.	≤ 40 Nm

[1] Of V_s.

[2] With Ia = 200 mA.

[3] Typ. 8%.

[4] Ub = 20 ... 30 VDC.

[5] Ta = 23 °C ± 5 °C.

[6] Front.

SAFETY-RELATED PARAMETERS

$MTTF_D$	171 years
DC_{avg}	0%
T_M (mission time)	20 years

REDUCTION FACTORS

Note	The values are reference values which may vary
St37 steel (Fe)	1
Stainless steel (V2A, 304)	Approx. 0.75
Aluminum (Al)	Approx. 0.2
Copper (Cu)	Approx. 0.12
Brass (Br)	Approx. 0.34

INSTALLATION NOTE

Remark	Associated graphic see "Installation"
B	8 mm

C	12 mm
D	6 mm
F	12 mm

CERTIFICATES

EU declaration of conformity	✓
UK declaration of conformity	✓
Moroccan declaration of conformity	✓
China RoHS	✓
China Compulsory Product Certification (CCC) exempt	✓

INSTALLATION NOTE

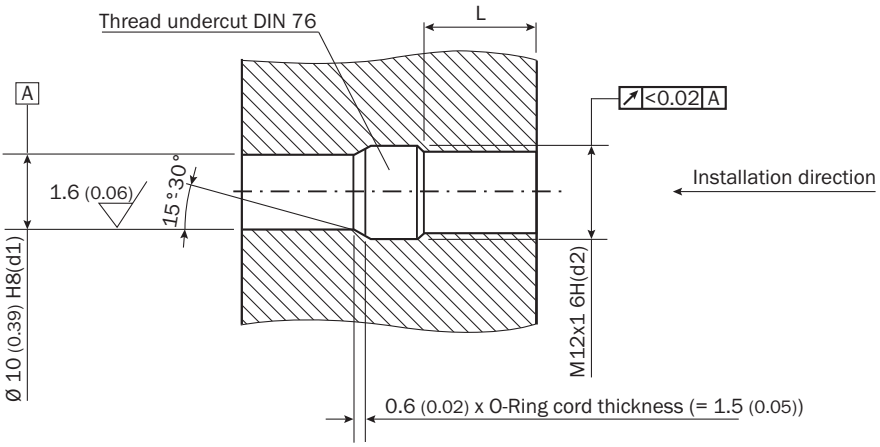

L: recommended installation depth: L≥ 0.8 (0.03) x d2

INSTALLATION NOTE FLUSH INSTALLATION

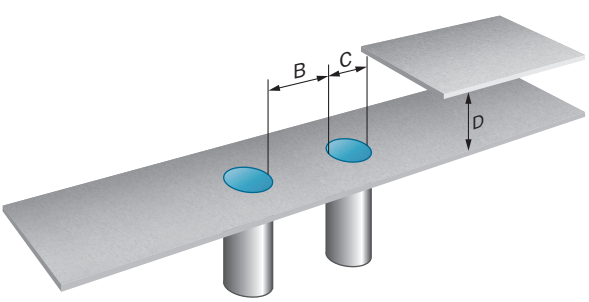

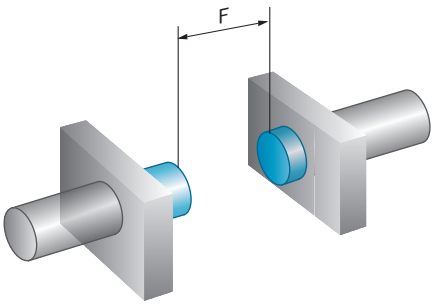

CONNECTION DIAGRAM CD-007

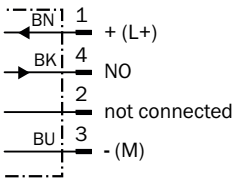

DIMENSIONAL DRAWING IMP12-XXXXXXXXF, 93 MM

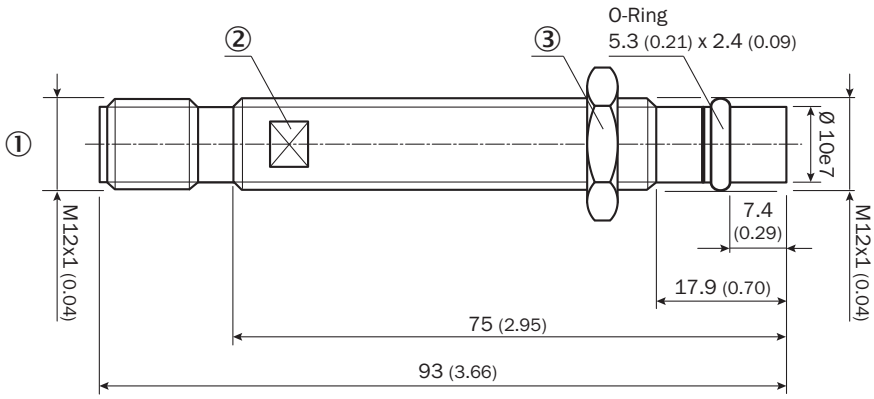

Dimensions in mm (inch)
① male connector M12, 4-pin
② width across 10
③ width across 17

Further information as well as suitable accessories, example applications and downloads such as CAD dimensional models, operating instructions and software can be found at www.sick.com/6050131

SICK AG
WALDKIRCH
GERMANY
SICK.COM

SICK AT A GLANCE

SICK is a leading global technology company for intelligent sensors and integrated solutions in industrial automation. Our technologies set benchmarks, making your industrial processes more efficient, safer and more sustainable – both in logistics and manufacturing operations.

SICK combines sensor intelligence with industry expertise and certified consulting services. We provide the ideal foundation for scalable as well as tailor-made automation solutions and create added value along the entire value chain. Our close partnerships with our customers are more than just a promise: Together, we optimize productivity, improve quality, protect health and safety, and help build a sustainable future. All with empathy and trust.

Since 1946, we have been developing innovative technologies with passion and a pioneering spirit. With a global network in around 40 countries, SICK has a global presence and is always close by. The company's headquarters are located in Waldkirch near Freiburg, Germany. Our customers benefit from our understanding of both local and global requirements, which enables us to deliver tailor-made solutions

SICK
Sensor Intelligence