SICK.COM

DATA SHEET

WT100-2P3439

W100
Photoelectric sensors

SICK Sensor Intelligence

Illustration may differ

PHOTOELECTRIC SENSORS

WT100-2P3439

ORDERING INFORMATION

Type	part no.
WT100-2P3439	6052373

Further device versions and accessories at www.sick.com/W100

DETAILED TECHNICAL DATA

FEATURES

Functional principle	Photoelectric proximity sensor
Functional principle detail	Energetic
Dimensions (W x H x D)	11 mm x 31 mm x 20 mm
Housing design (light emission)	Rectangular
Sensing range max.	0 mm ... 1,200 mm [1]
Sensing range	0 mm ... 750 mm [1]
Type of light	Visible red light
Light source	LED [2]
Light spot size (distance)	Ø 75 mm (1,000 mm)
Wave length	632 nm
Adjustment	Potentiometer (Sensing range)

[1] Object with 90% remission (based on standard white, DIN 5033).

[2] Average service life: 100,000 h at T_U = +25 °C.

MECHANICS/ELECTRONICS

Supply voltage U_B	10 V DC ... 30 V DC [1]
Ripple	± 10 % [2]
Current consumption	30 mA [3]
Switching output	PNP
Switching mode	Light/dark switching
Switching mode selector	Selectable via light/dark rotary switch
Signal voltage PNP HIGH/LOW	U_V - 1,8 V / ca. 0 V
Output current $I_{max.}$	≤ 100 mA
Response time	≤ 0.5 ms [4]
Switching frequency	1,000 Hz [5]
Connection type	Connector M8, 3-pin
Circuit protection	A [6] B [7] D [8]
Protection class	III
Housing material	Plastic, ABS/PC/POM
Optics material	Plastic, PMMA
Enclosure rating	IP67
Items supplied	Mounting bracket BEF-W100-A
Ambient operating temperature	–25 °C ... +55 °C
Ambient temperature, storage	–40 °C ... +70 °C

[1] Limit values.

[2] May not fall below or exceed U_V tolerances.

[3] Without load.

[4] Signal transit time with resistive load.

[5] With light/dark ratio 1:1.

[6] A = V_S connections reverse-polarity protected.

[7] B = output reverse-polarity protected.

[8] D = outputs overcurrent and short-circuit protected.

SAFETY-RELATED PARAMETERS

$MTTF_D$	954 years
DC_{avg}	0 %

CERTIFICATES

EU declaration of conformity	✓
UK declaration of conformity	✓
ACMA declaration of conformity	✓
Moroccan declaration of conformity	✓
China RoHS	✓
China Compulsory Product Certification (CCC) exempt	✓
cRUus certificate	✓
Photobiological safety (DIN EN 62471) certificate	✓

ADJUSTMENTS W100-2

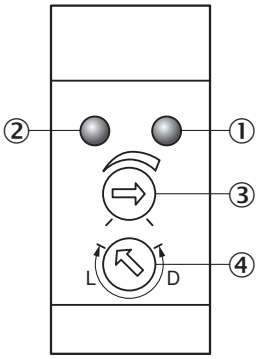

① LED indicator orange: switching output active
② LED indicator green: power on
③ Sensing range adjustment: potentiometer
④ Light/ dark rotary switch: L = light switching, D = dark switching

CONNECTION DIAGRAM CD-045

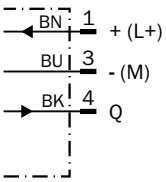

CHARACTERISTIC CURVE WT100-2, ENERGETIC

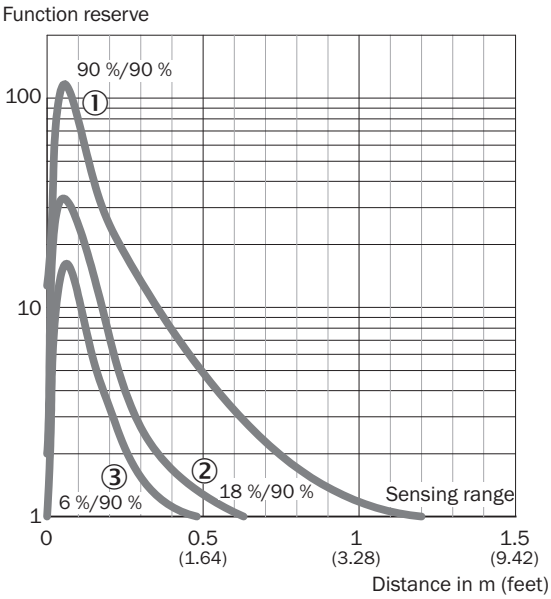

① Sensing range on white, 90% remission factor
② Sensing range on gray, 18% remission factor
③ Sensing range on black, 6% remission factor

LIGHT SPOT SIZE

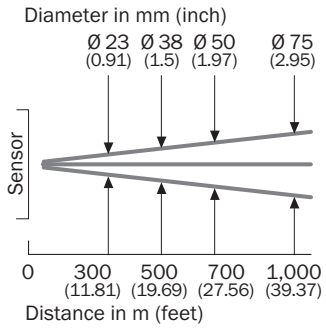

SENSING RANGE DIAGRAM WT100-2, ENERGETIC

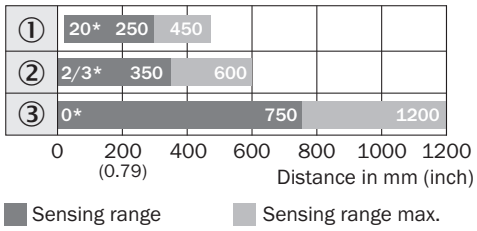

*Close-up range at maximum sensitivity

① Sensing range on black, 6% remission factor
② Sensing range on gray, 18% remission factor
③ Sensing range on white, 90% remission factor

DIMENSIONAL DRAWING WT100, WL100

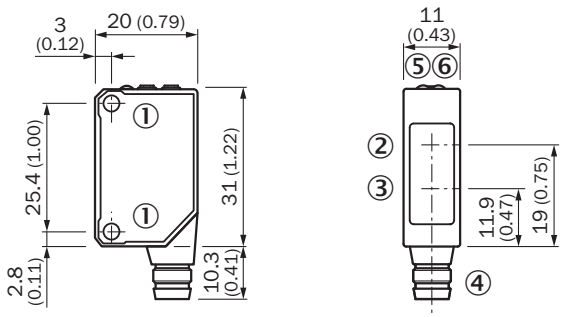

Dimensions in mm (inch)
① Threaded mounting hole M3
② Center of optical axis, receiver
③ Center of optical axis, sender
④ Connection
⑤ LED indicator orange: switching output active
⑥ LED indicator green: power on

Further information as well as suitable accessories, example applications and downloads such as CAD dimensional models, operating instructions and software can be found at www.sick.com/6052373

SICK AG
WALDKIRCH
GERMANY
SICK.COM

SICK AT A GLANCE

SICK is a leading global technology company for intelligent sensors and integrated solutions in industrial automation. Our technologies set benchmarks, making your industrial processes more efficient, safer and more sustainable – both in logistics and manufacturing operations.

SICK combines sensor intelligence with industry expertise and certified consulting services. We provide the ideal foundation for scalable as well as tailor-made automation solutions and create added value along the entire value chain. Our close partnerships with our customers are more than just a promise: Together, we optimize productivity, improve quality, protect health and safety, and help build a sustainable future. All with empathy and trust.

Since 1946, we have been developing innovative technologies with passion and a pioneering spirit. With a global network in around 40 countries, SICK has a global presence and is always close by. The company's headquarters are located in Waldkirch near Freiburg, Germany. Our customers benefit from our understanding of both local and global requirements, which enables us to deliver tailor-made solutions

SICK
Sensor Intelligence