SICK.COM

DATA SHEET

# CM30-25NPP-KW1

CM
Capacitive proximity sensors

SICK Sensor Intelligence

Illustration may differ

## CAPACITIVE PROXIMITY SENSORS

# CM30-25NPP-KW1

### ORDERING INFORMATION

| Type | part no. |
|---|---|
| CM30-25NPP-KW1 | 6020476 |

Further device versions and accessories at www.sick.com/CM

## DETAILED TECHNICAL DATA

### FEATURES

| | |
|---|---|
| Housing | Cylindrical thread design |
| Thread size | M30 x 1.5 |
| Diameter | Ø 30 mm |
| Sensing range $S_n$ | 4 mm ... 25 mm |
| Safe sensing range $S_a$ | 18 mm |
| Installation type | Non-flush |
| Switching frequency | 50 Hz |
| Connection type | Cable, 4-wire, 2 m [1] |
| Switching output | PNP |
| Output function | Complementary |
| Electrical wiring | DC 4-wire |
| Adjustment | Potentiometer (Sensitivity) |
| Enclosure rating | IP67 [2] |

[1] Do not bend below 0 °C.

[2] According to EN 60529.

### MECHANICS/ELECTRONICS

| | |
|---|---|
| Supply voltage | 10 V DC ... 36 V DC |

[1] Of Ub.

[2] At $I_a$ max.

[3] Without load.

[4] Of Sr.

[5] Ub and Ta constant.

[6] In EMC critical applications, conducted interference levels may lie within the frequency range of the oscillator. This can cause changes to the output signal. (See operating instructions.).

| | |
|---|---|
| Ripple | ≤ 10 % [1] |
| Voltage drop | ≤ 2.5 V DC [2] |
| Current consumption | 10 mA [3] |
| Time delay before availability | ≤ 100 ms |
| Hysteresis | 4 % ... 20 % |
| Reproducibility | ≤ 5 % [4] [5] |
| Temperature drift (of $S_r$) | ± 10 % |
| EMC | According to EN 60947-5-2 [6] |
| Continuous current $I_a$ | ≤ 200 mA |
| Cable material | PVC |
| Conductor size | 0.34 mm² |
| Short-circuit protection | ✓ |
| Reverse polarity protection | ✓ |
| Power-up pulse protection | ✓ |
| Shock and vibration resistance | 30 g, 11 ms / 10 ... 55 Hz, 1 mm |
| Ambient operating temperature | –25 °C ... +80 °C |
| Housing material | Plastic, PBT |
| Housing length | 75.6 mm |
| Thread length | 50 mm |
| Tightening torque, max. | 7.5 Nm |
| Items supplied | Mounting nut, PA12 plastic (2x)<br>Screwdriver for potentiometer adjustment (1 x) |

[1] Of Ub.

[2] At $I_a$ max.

[3] Without load.

[4] Of Sr.

[5] Ub and Ta constant.

[6] In EMC critical applications, conducted interference levels may lie within the frequency range of the oscillator. This can cause changes to the output signal. (See operating instructions.).

## REDUCTION FACTORS

| | |
|---|---|
| Note | The values are reference values which may vary |
| Metal | 1 |
| Water | 1 |
| PVC | Approx. 0.4 |
| Oil | Approx. 0.25 |
| Glass | 0.6 |
| Ceramics | 0.5 |
| Alcohol | 0.7 |
| Wood | 0.2 ... 0.7 |

## INSTALLATION NOTE

| | |
|---|---|
| Remark | Associated graphic see "Installation" |
| A | 30 mm |
| B | 60 mm |
| C | 30 mm |
| D | 75 mm |
| E | 14.5 mm<br>In critical distances, the sensor should be tested in the application |

## CLASSIFICATIONS

| | |
|---|---|
| ECl@ss 5.0 | 27270102 |
| ECl@ss 5.1.4 | 27270102 |
| ECl@ss 6.0 | 27270102 |
| ECl@ss 6.2 | 27270102 |
| ECl@ss 7.0 | 27270102 |
| ECl@ss 8.0 | 27270102 |
| ECl@ss 8.1 | 27270102 |
| ECl@ss 9.0 | 27270102 |
| ECl@ss 10.0 | 27270102 |
| ECl@ss 11.0 | 27270102 |
| ETIM 5.0 | EC002715 |
| ETIM 6.0 | EC002715 |
| ETIM 7.0 | EC002715 |
| ETIM 8.0 | EC002715 |
| UNSPSC 16.0901 | 39122230 |

## INSTALLATION NOTE NON-FLUSH INSTALLATION

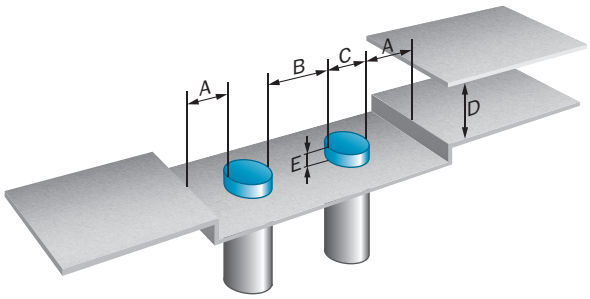


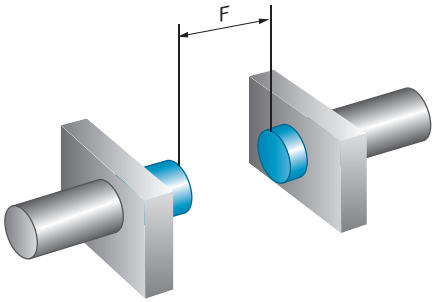


## CONNECTION DIAGRAM CD-005

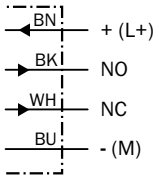

**RESPONSE DIAGRAM CM30, NON-FLUSH INSTALLATION**

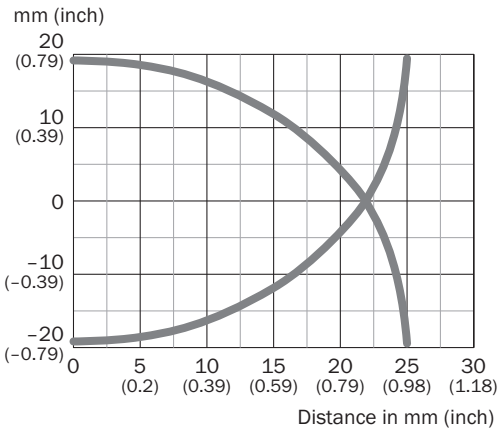


**DIMENSIONAL DRAWING CM30, NON-FLUSH, CABLE**

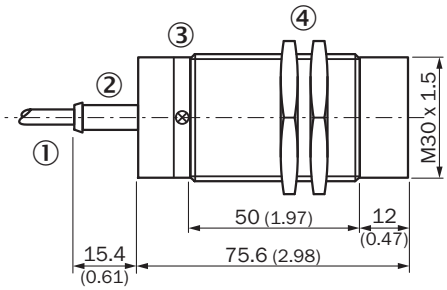


Dimensions in mm (inch)
① Connection
② Display LED
③ Potentiometer for sensitivity adjustment
④ fastening nuts (2 x); 36 mm hex, plastic

Further information as well as suitable accessories, example applications and downloads such as CAD dimensional models, operating instructions and software can be found at www.sick.com/6020476

SICK AG
WALDKIRCH
GERMANY
SICK.COM

# SICK AT A GLANCE

SICK is a leading global technology company for intelligent sensors and integrated solutions in industrial automation. Our technologies set benchmarks, making your industrial processes more efficient, safer and more sustainable – both in logistics and manufacturing operations.

SICK combines sensor intelligence with industry expertise and certified consulting services. We provide the ideal foundation for scalable as well as tailor-made automation solutions and create added value along the entire value chain. Our close partnerships with our customers are more than just a promise: Together, we optimize productivity, improve quality, protect health and safety, and help build a sustainable future. All with empathy and trust.

Since 1946, we have been developing innovative technologies with passion and a pioneering spirit. With a global network in around 40 countries, SICK has a global presence and is always close by. The company's headquarters are located in Waldkirch near Freiburg, Germany. Our customers benefit from our understanding of both local and global requirements, which enables us to deliver tailor-made solutions

SICK
Sensor Intelligence