SICK.COM

DATA SHEET

WT27-2F430

Photoelectric sensors

SICK Sensor Intelligence

Illustration may differ

PHOTOELECTRIC SENSORS

WT27-2F430

ORDERING INFORMATION

Type	part no.
WT27-2F430	1015082

Further device versions and accessories at www.sick.com/

DETAILED TECHNICAL DATA

FEATURES

Functional principle	Photoelectric proximity sensor
Functional principle detail	Background suppression
Dimensions (W x H x D)	24.6 mm x 80 mm x 53.5 mm
Housing design (light emission)	Rectangular
Sensing range max.	100 mm ... 1,000 mm [1]
Sensing range	100 mm ... 1,000 mm [1]
Type of light	Visible red light
Light source	LED
Adjustment	Potentiometer

[1] Object with 90% remission (based on standard white, DIN 5033).

MECHANICS/ELECTRONICS

Supply voltage	10 V DC ... 30 V DC
Current consumption	25 mA [1]
Switching output	PNP
Switching mode	Light/dark switching
Response time	≤ 2 ms [2]
Connection type	Male connector M12, 4-pin
Housing material	Plastic, ABS
Optics material	Plastic, PMMA
Enclosure rating	IP65
Ambient operating temperature	–40 °C ... +60 °C
Ambient temperature, storage	–40 °C ... +75 °C

[1] Without load.

[2] Signal transit time with resistive load.

UL File No.	NRKH.E181493 & NRKH7.E181493

[1] Without load.

[2] Signal transit time with resistive load.

CONNECTION TYPE

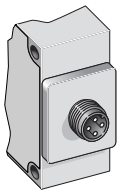

CONNECTION DIAGRAM

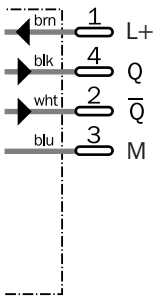

CHARACTERISTIC CURVE

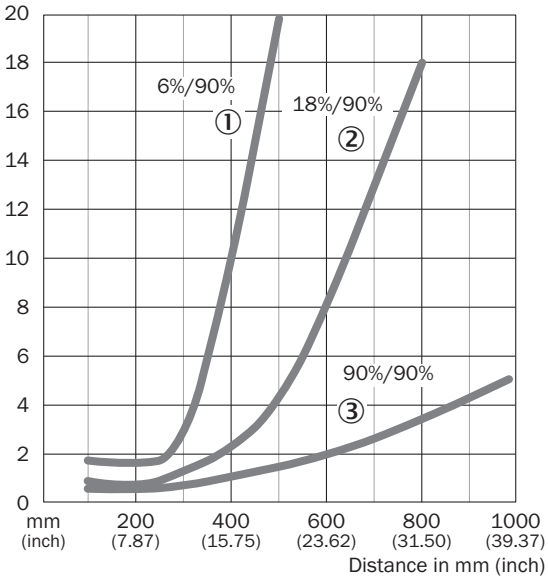

ADJUSTMENTS POTENTIOMETER

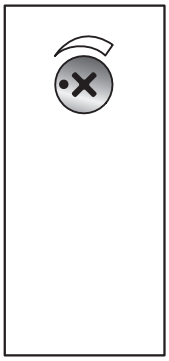

DIMENSIONAL DRAWING

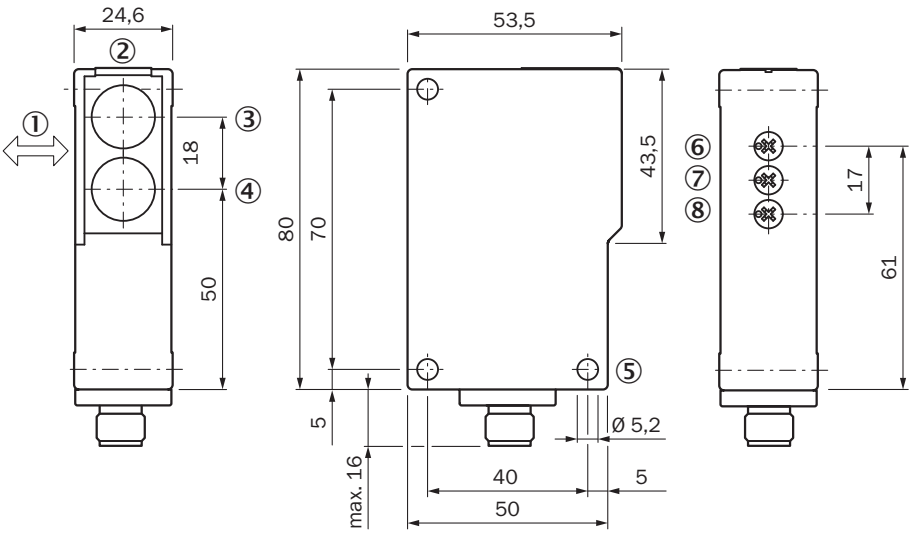

Dimensions in mm (inch)
① Standard direction
② LED signal strength indicator
③ Optical axis, sender
④ optical axis, receiver
⑤ Mounting hole, Ø 5.2 mm
⑥ Adjustment of sensing range

Further information as well as suitable accessories, example applications and downloads such as CAD dimensional models, operating instructions and software can be found at www.sick.com/1015082

SICK AG
WALDKIRCH
GERMANY
SICK.COM

SICK AT A GLANCE

SICK is a leading global technology company for intelligent sensors and integrated solutions in industrial automation. Our technologies set benchmarks, making your industrial processes more efficient, safer and more sustainable – both in logistics and manufacturing operations.

SICK combines sensor intelligence with industry expertise and certified consulting services. We provide the ideal foundation for scalable as well as tailor-made automation solutions and create added value along the entire value chain. Our close partnerships with our customers are more than just a promise: Together, we optimize productivity, improve quality, protect health and safety, and help build a sustainable future. All with empathy and trust.

Since 1946, we have been developing innovative technologies with passion and a pioneering spirit. With a global network in around 40 countries, SICK has a global presence and is always close by. The company's headquarters are located in Waldkirch near Freiburg, Germany. Our customers benefit from our understanding of both local and global requirements, which enables us to deliver tailor-made solutions

SICK
Sensor Intelligence