SICK.COM

DATA SHEET

# C41E-0903AG300

C4000 Micro
Safety light curtains

Sensor Intelligence

Illustration may differ

## SAFETY LIGHT CURTAINS

# C41E-0903AG300

### ORDERING INFORMATION

| Type | part no. |
|---|---|
| C41E-0903AG300 | 1023481 |

Further device versions and accessories at www.sick.com/C4000_Micro

## DETAILED TECHNICAL DATA

### FEATURES

| | |
|---|---|
| System part | Receiver |
| Resolution | 30 mm |
| Scanning range | 6 m |
| Protective field height | 900 mm |
| Synchronization | Optical synchronization |

### SAFETY-RELATED PARAMETERS

| | |
|---|---|
| Type | Type 4 (IEC 61496-1) |
| Safety integrity level | SIL 3 (IEC 61508) |
| Category | Category 4 (EN ISO 13849) |
| Performance level | PL e (EN ISO 13849) |
| $PFH_D$ (mean probability of a dangerous failure per hour) | $15 * 10^{-9}$ (EN ISO 13849) |
| $T_M$ (mission time) | 20 years (EN ISO 13849) |
| Safe state in the event of a fault | At least one OSSD is in the OFF state. |

### FUNCTIONS

| | Functions | Delivery status |
|---|---|---|
| Protective operation | ✓ | |
| Restart interlock | ✓ | Internal |
| External device monitoring (EDM) | ✓ | Deactivated |

## INTERFACES

| | |
|---|---|
| System connection | |
| Direction of cable connection | Straight |
| Conductor cross section | 0.25 mm² |
| Permitted cable length | 15 m [1] |
| Configuration method | Hard wired |
| Display elements | 7-segment display |

[1] Depending on load, power supply and wire cross-section. The technical specifications must be observed.

## ELECTRONICS

| | |
|---|---|
| Protection class | III (IEC 61140) |
| Supply voltage $V_S$ | 24 V DC (19.2 V ... 28.8 V) [1] |
| Residual ripple | ≤ 10 % [2] |
| Output signal switching devices (OSSDs) | |
| Type of output | 2 PNP semiconductors, short-circuit protected, cross-circuit monitored |
| ON state, switching voltage HIGH | 24 V DC (15 V DC ... 28.8 V DC) |
| OFF state, switching voltage LOW | 2 V DC |
| Current-carrying capacity per OSSD | ≤ 500 mA |

[1] The external voltage supply must be capable of buffering brief mains voltage failures of 20 ms as specified in EN 60204-1. Suitable power supplies are available as accessories from SICK.

[2] Within the limits of $V_S$.

## MECHANICS

| | |
|---|---|
| Dimensions | See dimensional drawing |
| Housing cross-section | 33.5 mm x 28.5 mm |
| Housing material | Aluminum extruded profile |
| Weight | 955 g |

## AMBIENT DATA

| | |
|---|---|
| Enclosure rating | IP65 (IEC 60529) |
| Ambient operating temperature | –30 °C ... +55 °C |
| Storage temperature | –30 °C ... +70 °C |
| Air humidity | 15 % ... 95 %, Non-condensing |
| Vibration resistance | 5 g, 10 Hz ... 55 Hz (EN 60068-2-6) |
| Shock resistance | 10 g, 16 ms (EN 60068-2-27) |

## OTHER INFORMATION

| | |
|---|---|
| Wave length | 850 nm |

**DIMENSIONAL DRAWING**

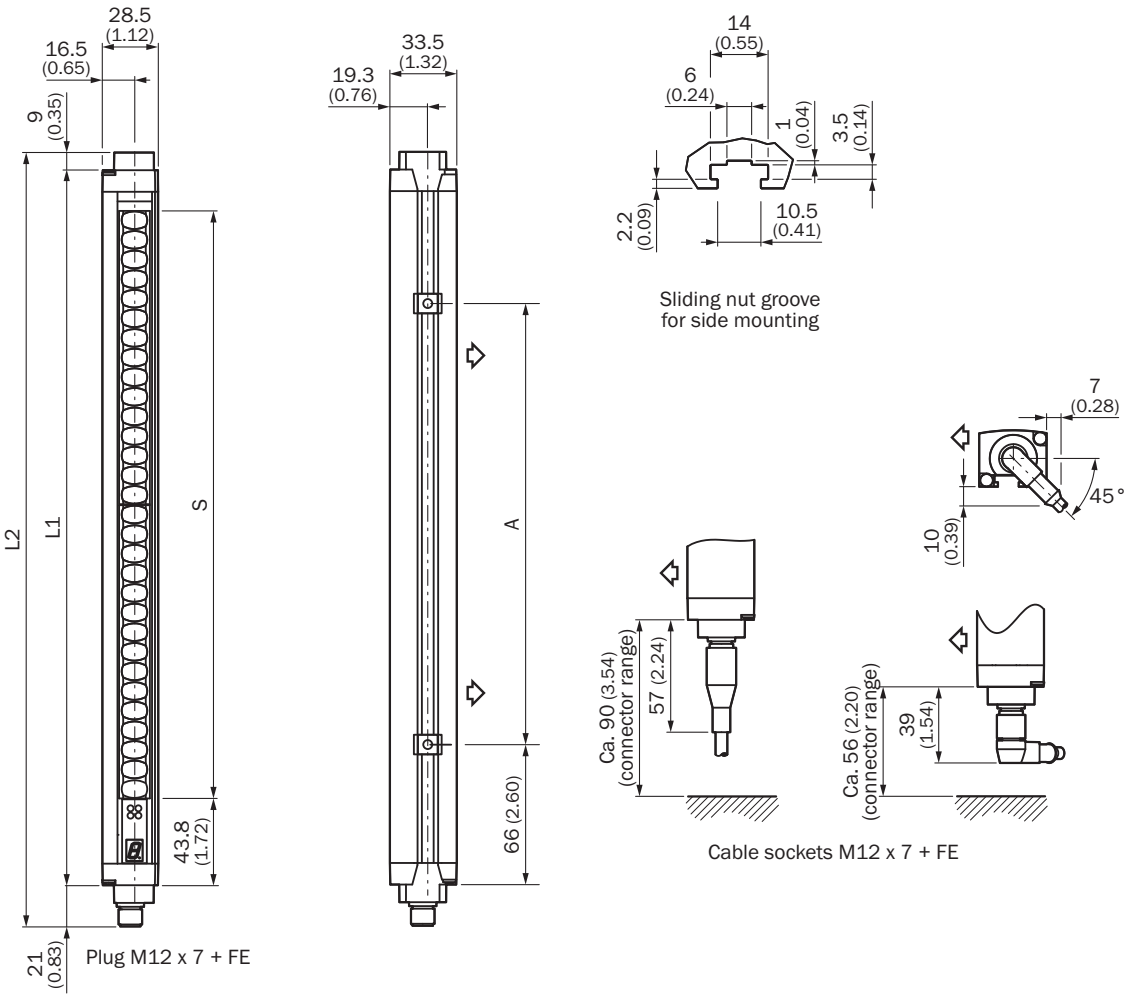


Dimensions in mm (inch)
illustration sender (receiver mirror image)

| Protective field height S | L1 | L2 | A |
|---|---|---|---|
| 150 (5.91) | 246 (9.69) | 276 (10.87) | 106 (4.17) |
| 300 (11.81) | 364 (14.33) | 394 (15.51) | 224 (8.82) |
| 450 (17.72) | 515 (20.28) | 545 (21.46) | 374 (14.72) |
| 600 (23.62) | 666 (26.22) | 696 (27.40) | 524 (20.639 |
| 750 (29.53) | 816 (32.13) | 846 (33.31) | 674 (26.54) |
| 900 (35.43) | 967 (38.07) | 997 (39.25) | 824 (32.44) |
| 1,050 (41.34) | 1,117 (43.98) | 1,147 (45.16) | 974 (38.35) |
| 1,200 (47.24) | 1,266 (49.84) | 1,296 (51.02) | 1,124 (44.25) |

Further information as well as suitable accessories, example applications and downloads such as CAD dimensional models, operating instructions and software can be found at www.sick.com/1023481

SICK AG
WALDKIRCH
GERMANY
SICK.COM

# SICK AT A GLANCE

SICK is a leading global technology company for intelligent sensors and integrated solutions in industrial automation. Our technologies set benchmarks, making your industrial processes more efficient, safer and more sustainable – both in logistics and manufacturing operations.

SICK combines sensor intelligence with industry expertise and certified consulting services. We provide the ideal foundation for scalable as well as tailor-made automation solutions and create added value along the entire value chain. Our close partnerships with our customers are more than just a promise: Together, we optimize productivity, improve quality, protect health and safety, and help build a sustainable future. All with empathy and trust.

Since 1946, we have been developing innovative technologies with passion and a pioneering spirit. With a global network in around 40 countries, SICK has a global presence and is always close by. The company's headquarters are located in Waldkirch near Freiburg, Germany. Our customers benefit from our understanding of both local and global requirements, which enables us to deliver tailor-made solutions

SICK
Sensor Intelligence