SICK.COM

DATA SHEET

CLV430-6010

CLV43x
Fixed mount barcode scanners

SICK Sensor Intelligence

FIXED MOUNT BARCODE SCANNERS

CLV430-6010

ORDERING INFORMATION

Type	part no.
CLV430-6010	1017981

Further device versions and accessories at www.sick.com/CLV43x

DETAILED TECHNICAL DATA

FEATURES

Version	Long Range
Connection type	Standard
Reading field	Oscillating mirror
Scanner design	Line scanner
Optical focus	Fixed focus
Light source	Visible red light (650 nm)
Laser class	2 (DIN EN 60825-1)
Aperture angle	≤ 50°
Reading distance	160 mm ... 440 mm [1]
Scanning frequency	300 Hz ... 800 Hz
Code resolution	0.35 mm ... 0.5 mm
Oscillating mirror functions	Fixed (adjustable position), oscillating (variable or fixed amplitude), one shot
Oscillation frequency	0.5 Hz ... 4 Hz
Angle of deflection	–20° ... 20° (can be adjusted via software)

[1] For details see reading field diagram.

MECHANICS/ELECTRONICS

Connection type	1 x 15-pin D-Sub HD male connector (0.9 m)
Supply voltage	10 V DC ... 30 V DC [1]
Power consumption	6.15 W
Housing material	Die-cast zinc, does not contain paint wetting impairment substances
Housing color	Light blue (RAL 5012)
Enclosure rating	IP65 (EN 60529 (1991-10)) A1 (2002-02)
Protection class	III (EN 61140 (2002-03))
Weight	620 g, with connecting cable

[1] UL-certified when a Class 2 power supply unit is used (tested according to UL 1310).

Dimensions (L x W x H)	99.8 mm x 92.2 mm x 37.8 mm
MTBF	20,000 h

[1] UL-certified when a Class 2 power supply unit is used (tested according to UL 1310).

PERFORMANCE

Bar code types	All current code types, Code 39, Code 128, Code 93, Codabar, GS1-128 / EAN 128, UPC / GTIN / EAN, Interleaved 2 of 5
Print ratio	2:1 ... 3:1
No. of codes per scan	1 ... 20 (Standard decoder) 1 ... 6 (SMART decoder)
No. of codes per reading interval	1 ... 50 (auto-discriminating)
No. of characters per reading interval	500
No. of multiple readings	1 ... 99

INTERFACES

Digital inputs	2 (“Sensor 1”, “Sensor 2”)
Digital outputs	2 (“Result 1”, “Result 2”)
Reading pulse	Reflector polling, Switching input “Sensor 1”, non-powered, serial interface
Optical indicators	4 LEDs (function indicator)
Acoustic indicators	Beeper/buzzer (can be switched off, can be allocated as a result indication function)

AMBIENT DATA

Electromagnetic compatibility (EMC)	EN 61000-6-2 (2001-10) / EN 61000-6-4 (2001-10)
Vibration resistance	IEC 60068-2-27 (1993)
Shock resistance	IEC 600682-6 (1995)
Ambient operating temperature	0 °C ... +40 °C
Storage temperature	–20 °C ... +70 °C
Permissible relative humidity	± 90 %, Non-condensing
Ambient light immunity	2,000 lx, on barcode
Bar code print contrast (PCS)	≥ 60 %

GENERAL NOTES

Life cycle phase	Discontinued

DIMENSIONAL DRAWING CLV43X/44X/45X OSCILLATING MIRROR

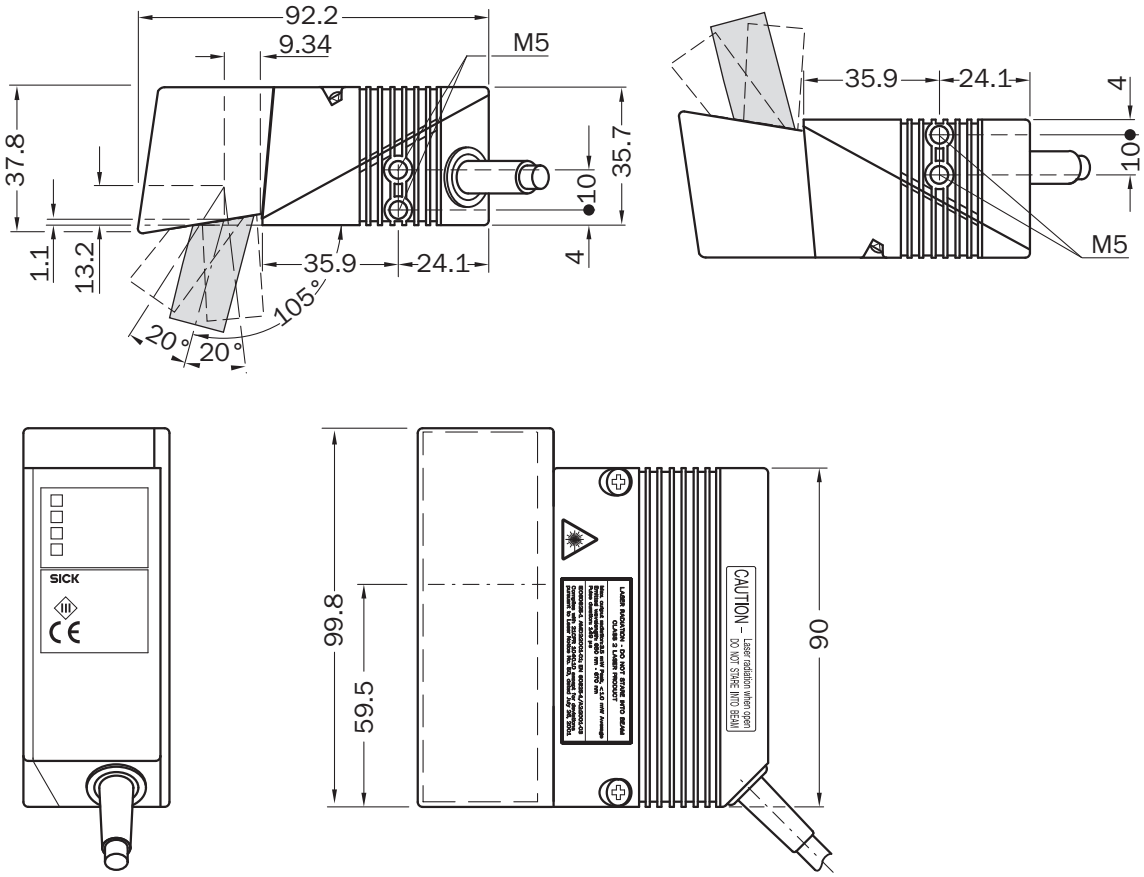

Dimensions in mm (inch)

Further information as well as suitable accessories, example applications and downloads such as CAD dimensional models, operating instructions and software can be found at www.sick.com/1017981

SICK AG
WALDKIRCH
GERMANY
SICK.COM

SICK AT A GLANCE

SICK is a leading global technology company for intelligent sensors and integrated solutions in industrial automation. Our technologies set benchmarks, making your industrial processes more efficient, safer and more sustainable – both in logistics and manufacturing operations.

SICK combines sensor intelligence with industry expertise and certified consulting services. We provide the ideal foundation for scalable as well as tailor-made automation solutions and create added value along the entire value chain. Our close partnerships with our customers are more than just a promise: Together, we optimize productivity, improve quality, protect health and safety, and help build a sustainable future. All with empathy and trust.

Since 1946, we have been developing innovative technologies with passion and a pioneering spirit. With a global network in around 40 countries, SICK has a global presence and is always close by. The company's headquarters are located in Waldkirch near Freiburg, Germany. Our customers benefit from our understanding of both local and global requirements, which enables us to deliver tailor-made solutions

SICK
Sensor Intelligence