Product data sheet



DHSP30-T2VAGPNLMNNXXS

DUSTHUNTER SP30

DUST MEASURING DEVICES

SICK
Sensor Intelligence.



Ordering information

Type	Part no.
DHSP30-T2VAGPNLMNNXXS	1089200

Our regional sales organization will help you to select the optimum device configuration.

Other models and accessories ➜ www.sick.com/DUSTHUNTER_SP30

Detailed technical data

Technical specifications

Description	With intergrated purge air unit
Measured values	Scattered light intensity, dust concentration (after gravimetric comparison measurement)
Measurement principles	Scattered light forward
Spectral range	640 nm ... 660 nm Laser, protection class 2, power < 1 mW
Measuring ranges	
Scattered light intensity	0 ... 7.5 SI / 0 ... 3,000 SI Measuring ranges freely selectable; nine measuring ranges pre-configured (0 ... 7.5/15/45/75/150/225/375/1,000/3,000 SI)
Response time (t_{90})	0.1 s ... 600 s Freely adjustable via SOPAS ET software
Accuracy	± 2 % Of measuring range full scale
Process temperature	–40 °C ... +220 °C
Process pressure	–50 hPa ... 10 hPa
Process gas humidity	Non-condensing
Duct diameter	≥ 0.15 m
Ambient temperature	–40 °C ... +60 °C
Conformities	TUEV type-examination
Electrical safety	CE
Enclosure rating	IP65
Analog outputs	1 output: 0/4 ... 20 mA, 750 Ω Electrically isolated

Digital outputs	3 relay contacts: 48 V, 1 A For status signals
Digital inputs	4 inputs: For external maintenance switch, automated operational check, linearity measurement, calibration curve switching, or filter monitoring
Serial	✓
Type of fieldbus integration	RTU RS-485
Function	For connection of a MCU control unit or as service interface
Modbus	✓
Type of fieldbus integration	RTU RS-485
Model	With intergrated purge air unit
Dimensions (W x H x D)	173 mm x 268 mm x 517 mm (for details see dimensional drawings)
Nominal length	180 mm
Weight	≤ 5 kg
Mounting	1″-thread
Energy supply	
Voltage	24 V DC
Power consumption	≤ 30 W
Test functions	Automatic self-test (linearity, drift, aging) Manual linearity test with reference filter
Options	MCU control unit

Classifications

ECLASS 5.0	27150306
ECLASS 5.1.4	27150306
ECLASS 6.0	27150306
ECLASS 6.2	27150306
ECLASS 7.0	27150306
ECLASS 8.0	27150306
ECLASS 8.1	27150306
ECLASS 9.0	27150306
ECLASS 10.0	27150306
ECLASS 11.0	27150306
ECLASS 12.0	27150306
ETIM 5.0	EC001190
ETIM 6.0	EC001190
ETIM 7.0	EC001190
ETIM 8.0	EC001190
UNSPSC 16.0901	41115406

Dimensional drawing (Dimensions in mm (inch))

Sender/receiver unit DHSP30, 1″ thread, nominal length = 180 mm, with integrated purge air unit

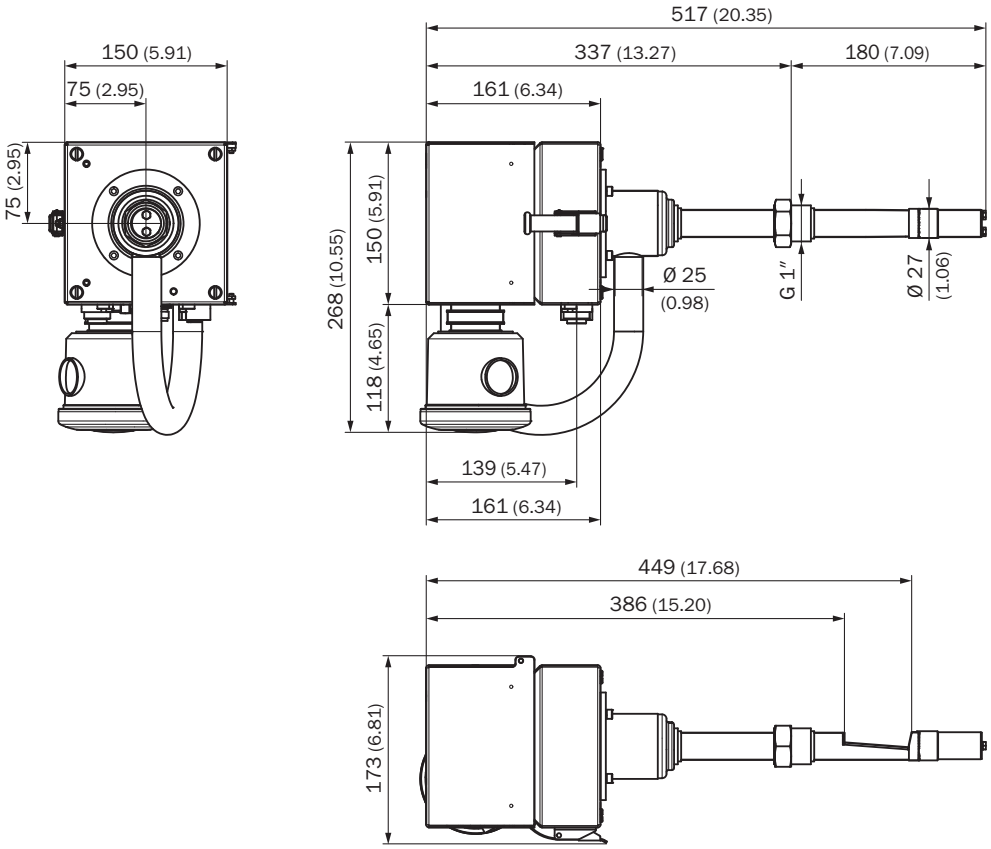

MCU-N control unit; wall-mounting enclosure, compact version (for non-hazardous areas only)

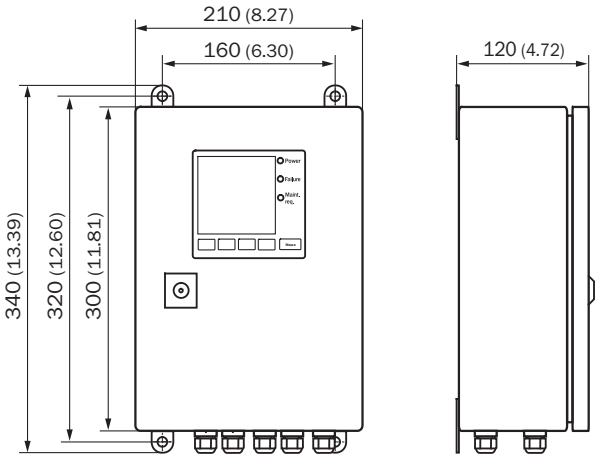

SLV4-2 purge air unit, 2BH1300

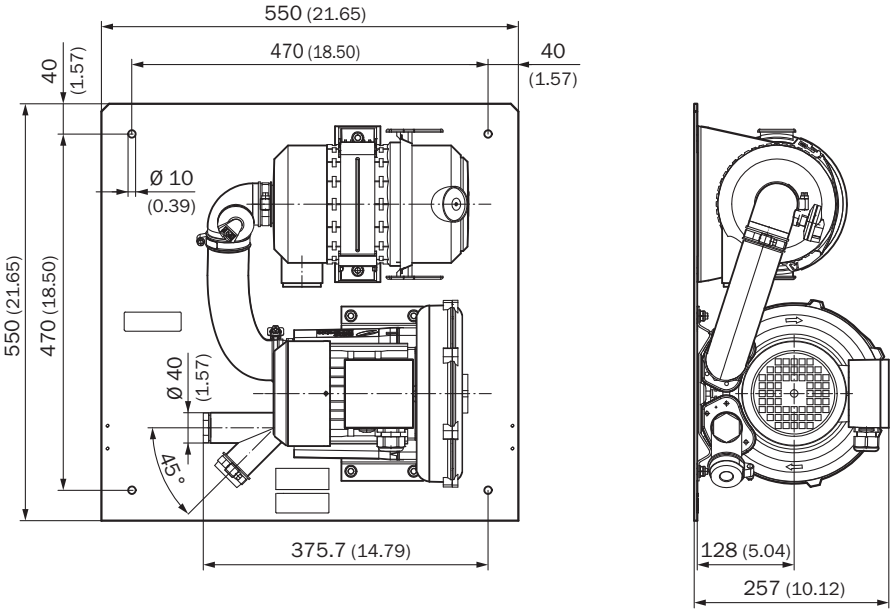

SICK AT A GLANCE

SICK is one of the leading manufacturers of intelligent sensors and sensor solutions for industrial applications. A unique range of products and services creates the perfect basis for controlling processes securely and efficiently, protecting individuals from accidents and preventing damage to the environment.

We have extensive experience in a wide range of industries and understand their processes and requirements. With intelligent sensors, we can deliver exactly what our customers need. In application centers in Europe, Asia and North America, system solutions are tested and optimized in accordance with customer specifications. All this makes us a reliable supplier and development partner.

Comprehensive services complete our offering: SICK LifeTime Services provide support throughout the machine life cycle and ensure safety and productivity.

For us, that is “Sensor Intelligence.”

WORLDWIDE PRESENCE:

Contacts and other locations –www.sick.com