SICK.COM

DATA SHEET

VTF18-4P1240V

V18
Photoelectric sensors

SICK Sensor Intelligence

Illustration may differ

PHOTOELECTRIC SENSORS

VTF18-4P1240V

ORDERING INFORMATION

Type	part no.
VTF18-4P1240V	6035487

Further device versions and accessories at www.sick.com/V18

DETAILED TECHNICAL DATA

FEATURES

Functional principle	Photoelectric proximity sensor
Functional principle detail	Energetic
Dimensions (W x H x D)	18 mm x 18 mm x 83 mm
Housing design (light emission)	Cylindrical
Housing length	83 mm
Thread diameter (housing)	M18 x 1
Optical axis	Axial
Sensing range max.	0 mm ... 110 mm [1]
Sensing range	5 mm ... 100 mm
Focus	Approx. 4.5°
Type of light	Visible red light
Light source	LED [2]
Light spot size (distance)	Ø 15 mm (100 mm)
Angle of dispersion	Approx. 4.5°
Wave length	660 nm
Adjustment	Single teach-in button (Sensing range) Manual, via Touch-Teach-in
Special applications	Hygienic and washdown zones

[1] Object with 90% remission (based on standard white, DIN 5033).

[2] Average service life: 100,000 h at T_U = +25 °C.

MECHANICS/ELECTRONICS

Supply voltage U_B	10 V DC ... 30 V DC [1]
Ripple	± 10 % [2]
Current consumption	35 mA [3]
Switching output	PNP [4]
Switching mode	Light/dark switching [4]
Switching mode selector	Selectable via L/D control cable
Signal voltage PNP HIGH/LOW	Approx. VS – 2.0 V / 0 V
Output current $I_{max.}$	≤ 100 mA
Response time	≤ 1 ms [5]
Switching frequency	500 Hz [6]
Connection type	Male connector M12, 4-pin [7]
Circuit protection	A [8] B [9] C [10] D [11]
Protection class	III
Weight	120 g
Housing material	Metal, Stainless steel V4A (1.4404, 316L)
Optics material	Plastic, Plan, PPS (Grilamid)
Enclosure rating	IP67 IP68 IP69K [12]
Ambient operating temperature	–25 °C ... +80 °C [13]
Ambient temperature, storage	–40 °C ... +80 °C
UL File No.	FDA, UL No. NRKH.E181493 & cUL No. NRKH7.E181493

[1] Limit values.

[2] May not fall below or exceed U_v tolerances.

[3] Without load, at VS 30 V DC.

[4] Control wire open: dark switching D.ON.

[5] Signal transit time with resistive load.

[6] With light/dark ratio 1:1.

[7] With gold plated contact pins, PPS with FDA certificate.

[8] A = V_s connections reverse-polarity protected.

[9] B = interference suppression.

[10] D = outputs overcurrent and short-circuit protected.

[11] D = inputs and output reverse-polarity protected.

[12] With correct mounted IP69K connector.

[13] +100 °C at max 15 minutes.

CERTIFICATES

EU declaration of conformity	✓
UK declaration of conformity	✓
Moroccan declaration of conformity	✓
China RoHS	✓

China Compulsory Product Certification (CCC) exempt	✓
cULus certificate	✓

ADJUSTMENTS

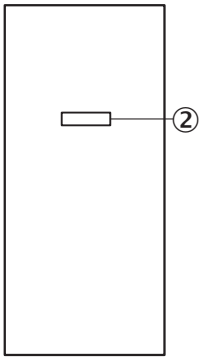

② Sensing range adjustment: Touch-Teach-In

CONNECTION TYPE

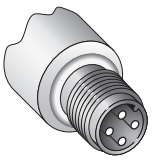

CONNECTION DIAGRAM CD-087

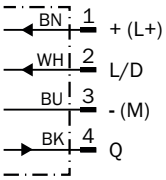

CHARACTERISTIC CURVE VTF18V

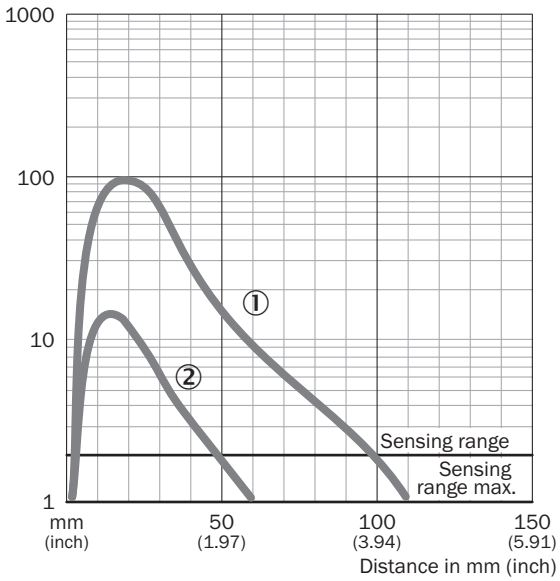

① Sensing range on white, 90% remission factor
② Sensing range on gray, 18% remission factor

SENSING RANGE DIAGRAM VTF18V

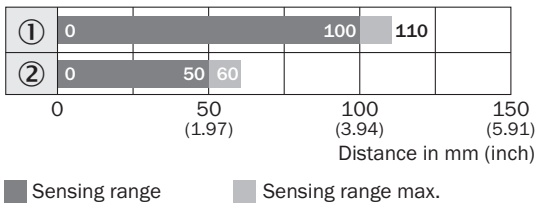

① Sensing range on white, 90% remission factor
② Sensing range on gray, 18% remission factor

DIMENSIONAL DRAWING VTF18V, VTE18V

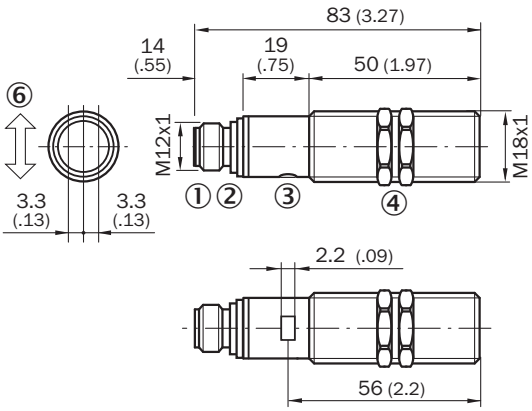

Dimensions in mm (inch)
① M12 male device connector, 4-pin
② Sensing range adjustment: Touch-Teach-In
③ Status indicator LED, green: signalizing Touch-Teach-in
④ Yellow LED indicator:
④ - lights continuously:
④ reception signal> reserve factor 2
④ - blinks: Reception signal< reserve factor 2 but > switching threshold 1
⑤ fastening nuts (2 x); width across 24, stainless steel

Further information as well as suitable accessories, example applications and downloads such as CAD dimensional models, operating instructions and software can be found at www.sick.com/6035487

SICK AG
WALDKIRCH
GERMANY
SICK.COM

SICK AT A GLANCE

SICK is a leading global technology company for intelligent sensors and integrated solutions in industrial automation. Our technologies set benchmarks, making your industrial processes more efficient, safer and more sustainable – both in logistics and manufacturing operations.

SICK combines sensor intelligence with industry expertise and certified consulting services. We provide the ideal foundation for scalable as well as tailor-made automation solutions and create added value along the entire value chain. Our close partnerships with our customers are more than just a promise: Together, we optimize productivity, improve quality, protect health and safety, and help build a sustainable future. All with empathy and trust.

Since 1946, we have been developing innovative technologies with passion and a pioneering spirit. With a global network in around 40 countries, SICK has a global presence and is always close by. The company's headquarters are located in Waldkirch near Freiburg, Germany. Our customers benefit from our understanding of both local and global requirements, which enables us to deliver tailor-made solutions

SICK
Sensor Intelligence