SICK.COM

DATA SHEET

WLL190T-2N434

WLL190
Fiber-optic sensors

SICK Sensor Intelligence

Illustration may differ

FIBER-OPTIC SENSORS

WLL190T-2N434

ORDERING INFORMATION

Type	part no.
WLL190T-2N434	6032554

Further device versions and accessories at www.sick.com/WLL190

DETAILED TECHNICAL DATA

FEATURES

Device type	Fiber-optic amplifier
Device type detail	Stand-alone
Dimensions (W x H x D)	10.5 mm x 34.8 mm x 76.5 mm
Housing design (light emission)	Rectangular
Sensing range max.	0 m ... 4 m (Through-beam system) [1] [2]
Sensing range	0 mm ... 480 mm, Proximity system [3] [4] 0 m ... 2 m, Through-beam system [5]
Focus	Approx. 65° [6]
Type of light	Visible red light
Light source	LED [7]
Angle of dispersion	Approx. 65° [6]
Wave length	650 nm
Adjustment	Menu-controlled Single teach-in button Cable
Indication	Display
Display	LED status display / 2x 4-character digital dual displays, Set value (green indicator) and actual value (red indicator) are displayed simultaneously, display of parameters

[1] Sensing range at response time 2 ms. Reduction at shorter response time (see LL3/ WLL190T-2 table).

[2] LL3-TB01 and LL3-TA01 tip adaptor.

[3] Object with 90% remission (based on standard white DIN 5033). Sensing range at 2 ms response time. Reduced at shorter response times (see LL3 / WLL190T-2 tables).

[4] LL3-DB01.

[5] LL3-TB01.

[6] See LL3 fiber-optic data.

[7] Average service life: 100,000 h at T_U = +25 °C.

MECHANICS/ELECTRONICS

Supply voltage U_B	10 V DC ... 24 V DC [1]
Ripple	≤ 10 % [2]
Current consumption	50 mA
Switching output	NPN [3] [4]
Switching mode	Light/dark switching [3] [4]
Switching mode selector	Manually selectable
Response time	≤ 2 ms, ≤ 60 µs, ≤ 250 µs
Switching frequency	8,333 Hz, 2,000 Hz, 250 Hz
Time functions	Without time delay Off delay Switch-on delay One shot
Delay time	Programmable, 0 ms ... 9,999 ms
Connection type	Male connector M8, 4-pin
Circuit protection	A [5] B [6] C [7] D [8]
Protection class	III
Weight	25 g
Housing material	Plastic, ABS/PC
Enclosure rating	IP66 [9]
Ambient operating temperature	–25 °C ... +55 °C [10]
Ambient temperature, storage	–40 °C ... +70 °C

[1] +- 10%.

[2] May not fall below or exceed U_V tolerances.

[3] Q_1, Q_2.

[4] Selectable Q2, external teach or counter reset.

[5] A = V_S connections reverse-polarity protected.

[6] B = inputs and output reverse-polarity protected.

[7] C = interference suppression.

[8] D = outputs overcurrent and short-circuit protected.

[9] With correctly attached fibre-optic cable LL3 and closed protection hood.

[10] Operating temperature fluctuates according to number of devices connected: 4–8 devices: –25 °C ... +50 °C (output current 50 mA) / 9–16 devices: –25 °C ... +45 °C (output current 20 mA).

CERTIFICATES

EU declaration of conformity	✓
UK declaration of conformity	✓
ACMA declaration of conformity	✓
Moroccan declaration of conformity	✓
China RoHS	✓
China Compulsory Product Certification (CCC) exempt	✓
Photobiological safety (DIN EN 62471) certificate	✓

ADJUSTMENTS

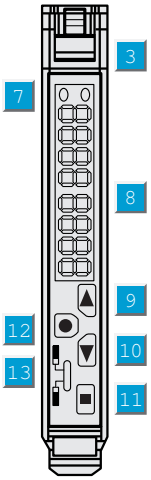

③ Locking the fiber-optic cables
⑦ Status indicator LED, yellow: Output active
⑧ Numeric display 3-digit and 4-digit
⑨ step pushbutton > (manual switching threshold: higher/next function parameter)
⑩ step pushbutton < (manual switching threshold: lower/previous function parameter)
⑪ Teach-in button
⑫ Mode/Enter-button
⑬ Operating mode selector switch:"SET" (active Teach-in switching threshold) /"RUN" (sensor mode and function parameter selection)

CONNECTION TYPE

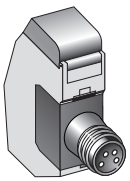

CONNECTION DIAGRAM CD-133

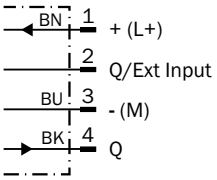

DIMENSIONAL DRAWING

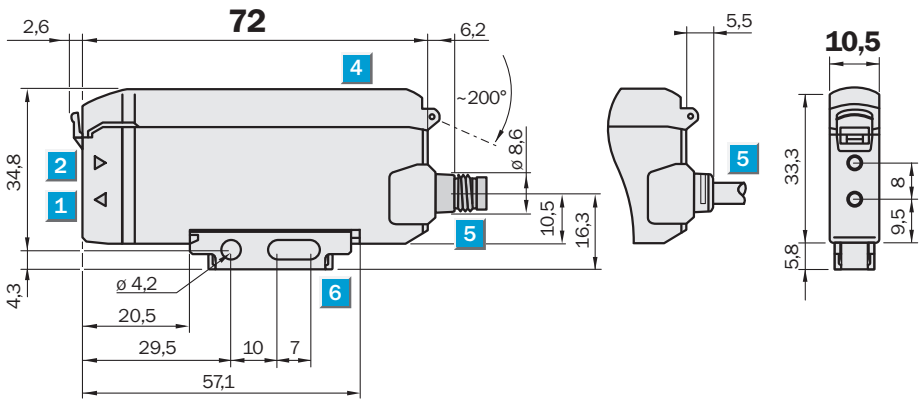

Dimensions in mm (inch)
① Sender LED, installation of LL3 fibre-optic cable (sender fibre)
② Receiver, installation of LL3 fibre optic cable (receiver fibre)
③ Locking the fiber-optic cables
④ protective hood opens approx. 180°
⑤ Connector M8 or 1-wire cable or 3-wire cable replaceable (cables not included with delivery)
⑥ Mounting bracket, included with delivery

Further information as well as suitable accessories, example applications and downloads such as CAD dimensional models, operating instructions and software can be found at www.sick.com/6032554

SICK AG
WALDKIRCH
GERMANY
SICK.COM

SICK AT A GLANCE

SICK is a leading global technology company for intelligent sensors and integrated solutions in industrial automation. Our technologies set benchmarks, making your industrial processes more efficient, safer and more sustainable – both in logistics and manufacturing operations.

SICK combines sensor intelligence with industry expertise and certified consulting services. We provide the ideal foundation for scalable as well as tailor-made automation solutions and create added value along the entire value chain. Our close partnerships with our customers are more than just a promise: Together, we optimize productivity, improve quality, protect health and safety, and help build a sustainable future. All with empathy and trust.

Since 1946, we have been developing innovative technologies with passion and a pioneering spirit. With a global network in around 40 countries, SICK has a global presence and is always close by. The company's headquarters are located in Waldkirch near Freiburg, Germany. Our customers benefit from our understanding of both local and global requirements, which enables us to deliver tailor-made solutions

SICK
Sensor Intelligence