SICK.COM

DATA SHEET

# WTB250-2R1641

W250
Photoelectric sensors

SICK Sensor Intelligence

Illustration may differ

## PHOTOELECTRIC SENSORS

# WTB250-2R1641

### ORDERING INFORMATION

| Type | part no. |
|---|---|
| WTB250-2R1641 | 6044684 |

Further device versions and accessories at www.sick.com/W250

## DETAILED TECHNICAL DATA

### FEATURES

| | |
|---|---|
| Functional principle | Photoelectric proximity sensor |
| Functional principle detail | Background suppression |
| Dimensions (W x H x D) | 20 mm x 60 mm x 43.9 mm |
| Housing design (light emission) | Rectangular |
| Sensing range max. | 150 mm ... 500 mm [1] |
| Sensing range | 150 mm ... 500 mm [1] |
| Focus | Approx. 3° |
| Type of light | Visible red light |
| Light source | LED [2] |
| Light spot size (distance) | Ø 30 mm (500 mm) |
| Angle of dispersion | Approx. 3° |
| Adjustment | Potentiometer, 2 turns [3]<br>Potentiometer, 2 rotations |

[1] Object with 90% remission (based on standard white, DIN 5033).

[2] Average service life: 100,000 h at $T_u$ = +25 °C.

[3] With position indicator.

## MECHANICS/ELECTRONICS

| | |
|---|---|
| Supply voltage $U_B$ | 24 V DC ... 240 V DC [1]<br>24 V AC/DC ... 240 V AC/DC [1] |
| Power consumption | ≤ 5 VA |
| Switching output | Relay, electrically isolated [2] |
| Output function | Change-over contacts |
| Switching mode | Light switching [2] |
| Switching current (switching voltage) | 3 A (240 V AC)<br>3 A (30 V DC) |
| Response time | ≤ 15 ms |
| Switching frequency | 33 Hz [3] |
| Connection type | Cable, 5-wire, 5 m [4] |
| Cable material | Plastic, PVC |
| Conductor cross section | 0.76 mm² |
| Cable diameter | Ø 6.4 mm |
| Circuit protection | A [5]<br>C [6] |
| Protection class | II [7] |
| Overvoltage category | 2 |
| Weight | 330 g |
| Housing material | Plastic, ABS |
| Optics material | Plastic, PMMA |
| Enclosure rating | IP67 |
| Items supplied | BEF-W250 mounting bracket |
| Usage category | AC-15, DC-13<br>According to EN 60947-1 |
| Electromagnetic compatibility (EMC) | EN 60947-5-2 [8] |
| Ambient operating temperature | –25 °C ... +55 °C |
| Ambient temperature, storage | –40 °C ... +70 °C |
| UL File No. | NRKH2.E300503 & NRKH8.E300503 |

[1] +- 10%.

[2] Provide suitable spark suppression for inductive or capacitive loads.

[3] With light/dark ratio 1:1.

[4] Do not bend below 0 °C.

[5] A = $V_s$ connections reverse-polarity protected.

[6] C = interference suppression.

[7] Reference voltage: 250 V AC.

[8] The AC/DC devices comply with the Radio Safety Requirements for the industrial sector (Radio Safety Class A). They may cause radio interference if used in a residential area.

## CERTIFICATES

| | |
|---|---|
| EU declaration of conformity | ✓ |
| UK declaration of conformity | ✓ |
| ACMA declaration of conformity | ✓ |
| Moroccan declaration of conformity | ✓ |
| China RoHS | ✓ |
| CCC certificate | ✓ |
| cRUus certificate | ✓ |

| | |
|---|---|
| Photobiological safety (DIN EN 62471) certificate | ✓ |

**ADJUSTMENTS WTB250-2**

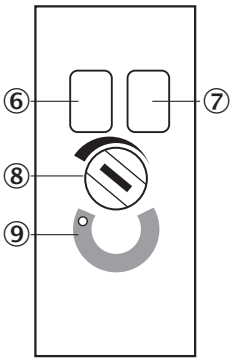


⑥ LED indicator green: Stability indicator
⑦ LED indicator yellow: Status of received light beam
⑧ Sensing range adjustment: potentiometer
⑨ Position indicator for sensitivity setting (270°)

**CONNECTION DIAGRAM CD-163**

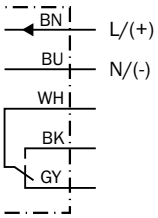


**CHARACTERISTIC CURVE WTB250-2, 500 MM**

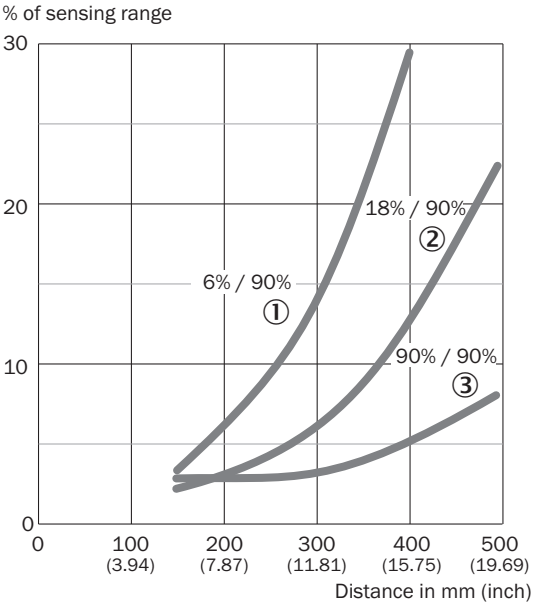


① sensing range on black, white background
② sensing range on gray, white background
③ sensing range on white, white background

**SENSING RANGE DIAGRAM WTB250-2, 500 MM**

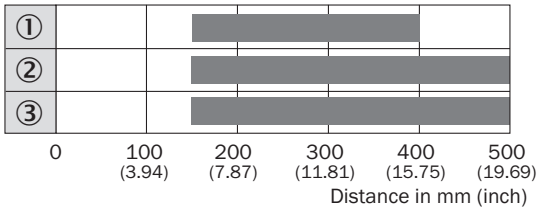


Sensing range

① sensing range on black, white background
② sensing range on gray, white background
③ sensing range on white, white background

**DIMENSIONAL DRAWING WTB250-2, AC/DC, CABLE**

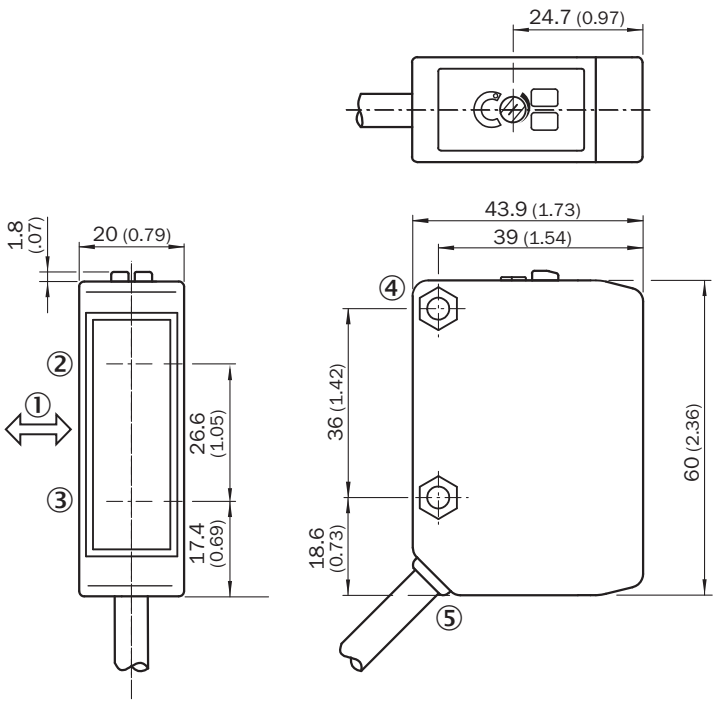


Dimensions in mm (inch)
① Standard direction of the material being detected
② Axis of sender
③ axis of receiver
④ mounting hole ø 4.2 mm, for M4 hexagon nuts on both sides
⑤ Connection cable

Further information as well as suitable accessories, example applications and downloads such as CAD dimensional models, operating instructions and software can be found at www.sick.com/6044684

SICK AG
WALDKIRCH
GERMANY
SICK.COM

# SICK AT A GLANCE

SICK is a leading global technology company for intelligent sensors and integrated solutions in industrial automation. Our technologies set benchmarks, making your industrial processes more efficient, safer and more sustainable – both in logistics and manufacturing operations.

SICK combines sensor intelligence with industry expertise and certified consulting services. We provide the ideal foundation for scalable as well as tailor-made automation solutions and create added value along the entire value chain. Our close partnerships with our customers are more than just a promise: Together, we optimize productivity, improve quality, protect health and safety, and help build a sustainable future. All with empathy and trust.

Since 1946, we have been developing innovative technologies with passion and a pioneering spirit. With a global network in around 40 countries, SICK has a global presence and is always close by. The company's headquarters are located in Waldkirch near Freiburg, Germany. Our customers benefit from our understanding of both local and global requirements, which enables us to deliver tailor-made solutions

SICK
Sensor Intelligence