SICK.COM

DATA SHEET

WL27-3P3431

W27
Photoelectric sensors

SICK Sensor Intelligence

Illustration may differ

PHOTOELECTRIC SENSORS

WL27-3P3431

ORDERING INFORMATION

Type	part no.
WL27-3P3431	1029081

Further device versions and accessories at www.sick.com/W27

DETAILED TECHNICAL DATA

FEATURES

Functional principle	Photoelectric retro-reflective sensor
Functional principle detail	With minimum distance to reflector (dual lens system)
Dimensions (W x H x D)	24.6 mm x 80.6 mm x 54 mm
Housing design (light emission)	Rectangular
Sensing range max.	0.1 m ... 15 m [1]
Sensing range	0.1 m ... 11 m [1]
Focus	Approx. 1.5°
Type of light	Visible red light
Light source	LED [2]
Light spot size (distance)	Ø 220 mm (10 m)
Angle of dispersion	Approx. 1.5°
Wave length	660 nm
Adjustment	Potentiometer

[1] Reflector PL80A.

[2] Average service life: 100,000 h at T_u = +25 °C.

MECHANICS/ELECTRONICS

Supply voltage U_B	10 V DC ... 30 V DC [1]
Ripple	< 5 V_{pp} [2]
Current consumption	30 mA [3]
Switching output	PNP
Output function	Complementary
Switching mode	Light/dark switching
Signal voltage PNP HIGH/LOW	Approx. V_S – 2.5 V / 0 V
Output current $I_{max.}$	≤ 100 mA
Response time	≤ 500 µs [4]
Switching frequency	1,000 Hz [5]
Connection type	Cable with M12 male connector, 4-pin, 270 mm [6]
Cable material	Plastic, PVC
Circuit protection	A [7] B [8] C [9]
Protection class	II [10]
Weight	120 g
Polarizing filter	✓
Housing material	Plastic, ABS
Optics material	Plastic, PMMA
Enclosure rating	IP66 IP67
Ambient operating temperature	–40 °C ... +60 °C
Ambient temperature, storage	–40 °C ... +75 °C
UL File No.	NRKH.E181493 & NRKH7.E181493

[1] Limit values when operated in short-circuit protected network: max. 8 A.

[2] May not fall below or exceed U_v tolerances.

[3] Without load.

[4] Signal transit time with resistive load.

[5] With light/dark ratio 1:1.

[6] Do not bend below 0 °C.

[7] A = V_s connections reverse-polarity protected.

[8] B = inputs and output reverse-polarity protected.

[9] C = interference suppression.

[10] Reference voltage: 50 V DC.

SAFETY-RELATED PARAMETERS

$MTTF_D$	1,640 years
DC_{avg}	0 %

ADJUSTMENTS POTENTIOMETER

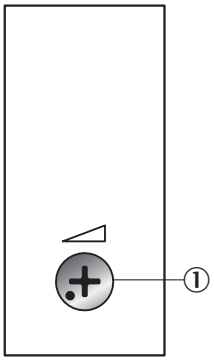

① Potentiometer

CONNECTION TYPE

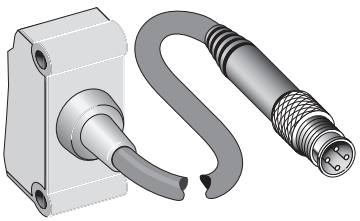

CONNECTION DIAGRAM CD-083

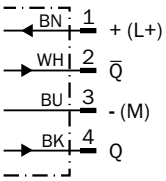

CHARACTERISTIC CURVE WL27-3

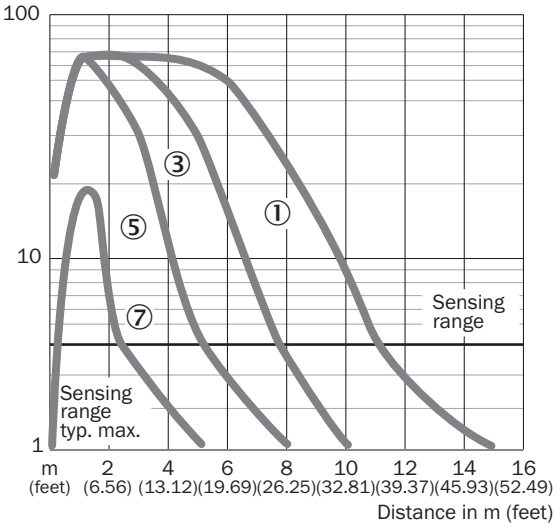

① Reflector PL80A
③ Reflector PL40A
⑤ Reflector PL20A
⑦ Reflective tape Diamond Grade

SENSING RANGE DIAGRAM WL27-3

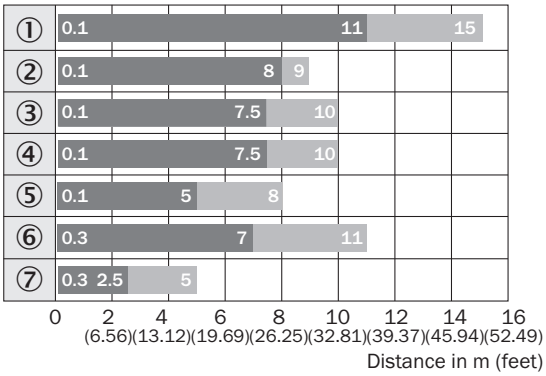

Sensing range Sensing range max.

① Reflector PL80A
② Reflector PL50A
③ Reflector PL40A
④ Reflector PL30A
⑤ Reflector PL20A
⑥ Reflector C110A
⑦ Reflective tape Diamond Grade

DIMENSIONAL DRAWING WL27-3, POTENTIOMETER

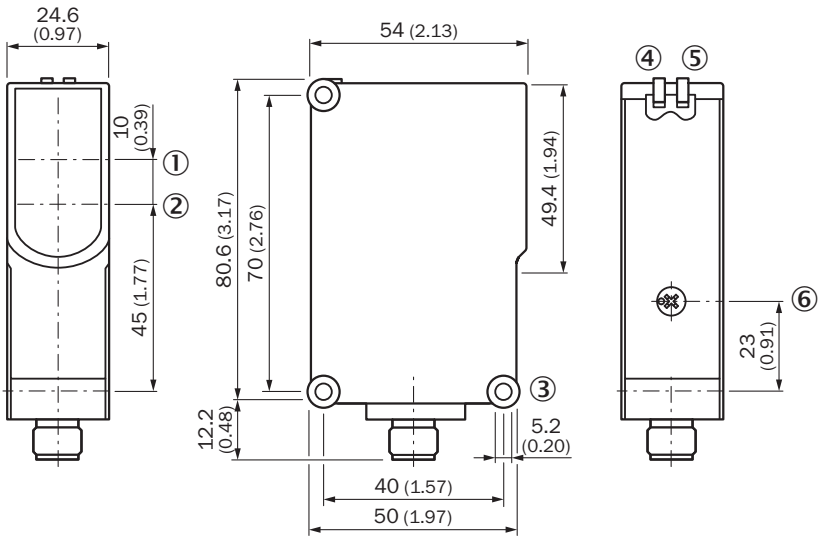

Dimensions in mm (inch)
① Optical axis, sender
② Optical axis, receiver
③ Mounting hole ø 5.2 mm
④ LED indicator green: Supply voltage active
⑤ LED indicator yellow: Status of received light beam
⑥ Sensitivity control (10 revolutions)

Further information as well as suitable accessories, example applications and downloads such as CAD dimensional models, operating instructions and software can be found at www.sick.com/1029081

SICK AG
WALDKIRCH
GERMANY
SICK.COM

SICK AT A GLANCE

SICK is a leading global technology company for intelligent sensors and integrated solutions in industrial automation. Our technologies set benchmarks, making your industrial processes more efficient, safer and more sustainable – both in logistics and manufacturing operations.

SICK combines sensor intelligence with industry expertise and certified consulting services. We provide the ideal foundation for scalable as well as tailor-made automation solutions and create added value along the entire value chain. Our close partnerships with our customers are more than just a promise: Together, we optimize productivity, improve quality, protect health and safety, and help build a sustainable future. All with empathy and trust.

Since 1946, we have been developing innovative technologies with passion and a pioneering spirit. With a global network in around 40 countries, SICK has a global presence and is always close by. The company's headquarters are located in Waldkirch near Freiburg, Germany. Our customers benefit from our understanding of both local and global requirements, which enables us to deliver tailor-made solutions

SICK
Sensor Intelligence