SICK.COM

DATA SHEET

WTB16P-6H161120A00

W16
Photoelectric sensors

SICK Sensor Intelligence

Illustration may differ

PHOTOELECTRIC SENSORS

WTB16P-6H161120A00

ORDERING INFORMATION

Type	part no.
WTB16P-6H161120A00	1222716

Further device versions and accessories at www.sick.com/W16

DETAILED TECHNICAL DATA

FEATURES

Functional principle	Photoelectric proximity sensor
Functional principle detail	Background suppression
Sensing range	
Sensing range min.	10 mm
Sensing range max.	1,000 mm
Adjustable switching threshold for background suppression	100 mm ... 1,000 mm
Reference object	Object with 90% remission factor (complies with standard white according to DIN 5033)
Minimum distance between set sensing range and background (black 6% / white 90%)	25 mm, at a distance of 400 mm
Recommended sensing range for the best performance	100 mm ... 400 mm
Emitted beam	
Light source	PinPoint LED
Type of light	Visible red light
Shape of light spot	Point-shaped
Light spot size (distance)	Ø 6 mm (500 mm)
Maximum dispersion of the emitted beam around the standardized transmission axis (squint angle)	< +/- 1.0° (at T_U = +23 °C)
Key LED figures	
Normative reference	EN 62471:2008-09 | IEC 62471:2006, modified
LED risk group marking	Free group
Wave length	635 nm
Average service life	100,000 h at T_a = +25 °C
Adjustment	
Teach-Turn adjustment	BluePilot For setting the sensing range
IO-Link	For configuring the sensor parameters and Smart Task functions
Display	
LED blue	BluePilot: sensing range indicator
LED green	Operating indicator Static on: power on Flashing: IO-Link mode

LED yellow	Status of received light beam Static on: object present Static off: object not present

SAFETY-RELATED PARAMETERS

$MTTF_D$	626 years
DC_{avg}	0%
T_M (mission time)	20 years

COMMUNICATION INTERFACE

IO-Link	✓, IO-Link V1.1
Data transmission rate	COM2 (38,4 kBaud)
Cycle time	2.3 ms
Process data length	16 Bit
Process data structure	Bit 0 = switching signal Q_{L1} Bit 1 = switching signal Q_{L2} Bit 2 ... 15 = empty
VendorID	26
DeviceID HEX	0x80015C
DeviceID DEC	8388956
Compatible master port type	A
SIO mode support	Yes

ELECTRONICS

Supply voltage U_B	10 V DC ... 30 V DC [1]
Ripple	≤ 5 V_{pp}
Usage category	DC-12 (According to EN 60947-5-2) DC-13 (According to EN 60947-5-2)
Current consumption	≤ 30 mA, without load. At U_B = 24 V
Protection class	III
Digital output	
Number	2 (Complementary)
Type	Push-pull: PNP/NPN
Switching mode	Light/dark switching
Signal voltage PNP HIGH/LOW	Approx. U_B-2.5 V / 0 V
Signal voltage NPN HIGH/LOW	Approx. U_B / < 2.5 V
Output current $I_{max.}$	≤ 100 mA
Circuit protection outputs	Reverse polarity protected Overcurrent and short-circuit protected
Response time	≤ 500 µs [2]
Repeatability (response time)	150 µs
Switching frequency	1,000 Hz [3]
Pin/Wire assignment	
Function of pin 4/black (BK)	Digital output, light switching, object present → output Q_{L1} HIGH; IO-Link communication C [4]
Function of pin 4/black (BK) – detail	The pin 4 function of the sensor can be configured Additional possible settings via IO-Link
Function of pin 2/white (WH)	Digital output, dark switching, object present → output $\bar{Q}_{L1}$ LOW [4]
Function of pin 2/white (WH) – detail	The pin 2 function of the sensor can be configured Additional possible settings via IO-Link

[1] Limit values.

[2] Signal transit time with resistive load in switching mode.

[3] With light/dark ratio 1:1.

[4] This switching output must not be connected to another output.

MECHANICS

Housing	Rectangular
Dimensions (W x H x D)	20 mm x 55.7 mm x 42 mm
Connection	Cable, 4-wire, 5 m
Connection detail	
Deep-freeze property	Do not bend below 0 °C
Conductor size	0.14 mm²
Cable diameter	Ø 4.8 mm
Length of cable (L)	5 m
Bending radius	For flexible use > 12 x cable diameter
Bending cycles	1,000,000
Material	
Housing	Plastic, VISTAL®
Front screen	Plastic, PMMA
Cable	Plastic, PVC
Weight	Approx. 100 g
Maximum tightening torque of the fixing screws	1.3 Nm

AMBIENT DATA

Enclosure rating	IP66 (EN 60529) IP67 (EN 60529) IP69 (EN 60529) [1]
Ambient operating temperature	–40 °C ... +60 °C
Ambient temperature, storage	–40 °C ... +75 °C
Shock resistance	50 g, 11 ms (25 positive and 25 negative shocks per axis, for X, Y, Z axes, 150 shocks in total (EN60068-2-27)) 50 g, 6 ms (5,000 positive and 5,000 negative shocks per axis, for X, Y, Z axes, 30,000 shocks in total (EN60068-2-27))
Vibration resistance	10 Hz ... 2,000 Hz (Amplitude 0.5 mm / 10 g, 20 sweeps per axis, for X, Y, Z axes, 1 octave/min, (EN60068-2-6))
Air humidity	35 % ... 95 %, relative humidity (no condensation)
Electromagnetic compatibility (EMC)	EN 60947-5-2
Resistance to cleaning agent	ECOLAB
UL File No.	NRKH.E181493 & NRKH7.E181493

[1] Replaces IP69K with ISO 20653: 2013-03.

SMART TASK

Smart Task name	Base logics
Logic function	Direct AND OR Window Hysteresis
Timer function	Deactivated Switch-on delay Off delay ON and OFF delay Impulse (one shot)
Inverter	Yes
Switching frequency	SIO Logic: 800 Hz [1] IOL: 650 Hz [2]
Response time	SIO Logic: 600 µs [1] IOL: 750 µs [2]

[1] Use of Smart Task functions without IO-Link communication (SIO mode).

[2] Use of Smart Task functions with IO-Link communication function.

Repeatability	SIO Logic: 300 µs [1] IOL: 400 µs [2]
Switching signal	
Switching signal Q_{L1}	Switching output
Switching signal $\bar{Q}_{L1}$	Switching output

[1] Use of Smart Task functions without IO-Link communication (SIO mode).

[2] Use of Smart Task functions with IO-Link communication function.

DIAGNOSIS

Device status	Yes
Quality of teach	Yes

CERTIFICATES

EU declaration of conformity	✓
UK declaration of conformity	✓
ACMA declaration of conformity	✓
Moroccan declaration of conformity	✓
China RoHS	✓
China Compulsory Product Certification (CCC) exempt	✓
ECOLAB certificate	✓
cULus certificate	✓
IO-Link certificate	✓
Photobiological safety (DIN EN 62471) certificate	✓
Information according to Art. 3 of Data Act (Regulation EU 2023/2854)	✓

DIMENSIONAL DRAWING, SENSOR

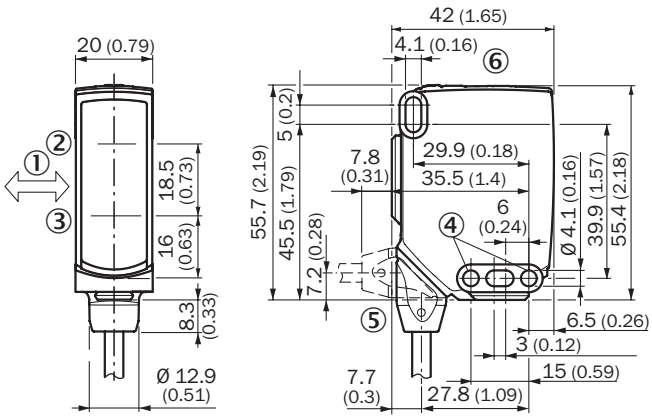

Dimensions in mm (inch)
① Standard direction of the material being detected
② Center of optical axis, sender
③ Center of optical axis, receiver
④ Mounting hole, Ø 4.1 mm
⑤ Connection
⑥ display and adjustment elements

DISPLAY AND ADJUSTMENT ELEMENTS

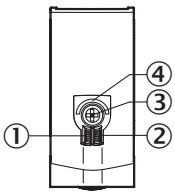

① LED indicator green
② LED indicator yellow
③ Teach-Turn adjustment
④ LED blue

CONNECTION TYPE CABLE, 4-WIRE

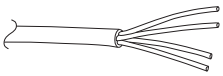

CONNECTION DIAGRAM CD-389

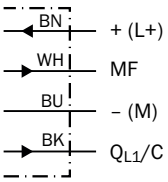

TRUTH TABLE PUSH-PULL: PNP/NPN – DARK SWITCHING $\overline{Q}$

	Dark switching $\overline{Q}$ (normally closed (upper switch), normally open (lower switch))	
	Object not present ➜ Output HIGH	Object present ➜ Output LOW
Light receive	✗	✓
Light receive indicator	✗	●
Load resistance to L+	✗	⚠
Load resistance to M	⚠	✗
	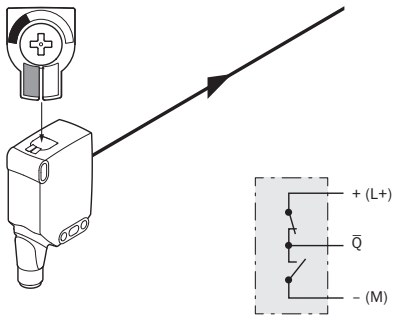	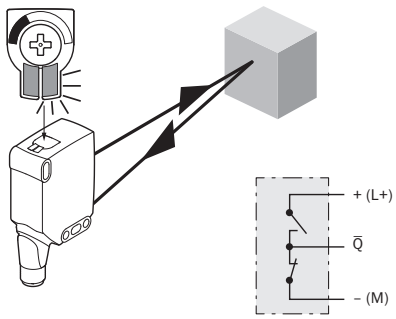

TRUTH TABLE PUSH-PULL: PNP/NPN - LIGHT SWITCHING Q

	Light switching Q (normally open (upper switch), normally closed (lower switch))	
	Object not present ➜ Output LOW	Object present ➜ Output HIGH
Light receive	✗	✓
Light receive indicator	✗	●
Load resistance to L+	⚠	✗
Load resistance to M	✗	⚠
	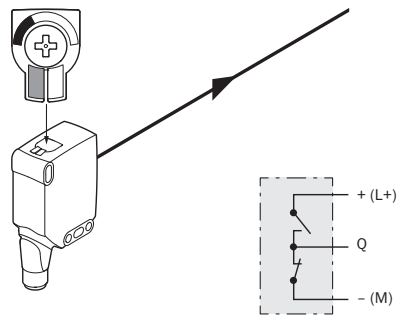	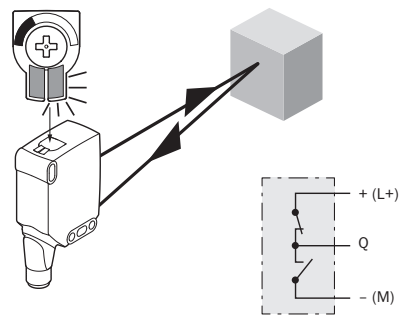

CHARACTERISTIC CURVE

Minimum distance in mm (y) between the set sensing range and white background (90 % remission)

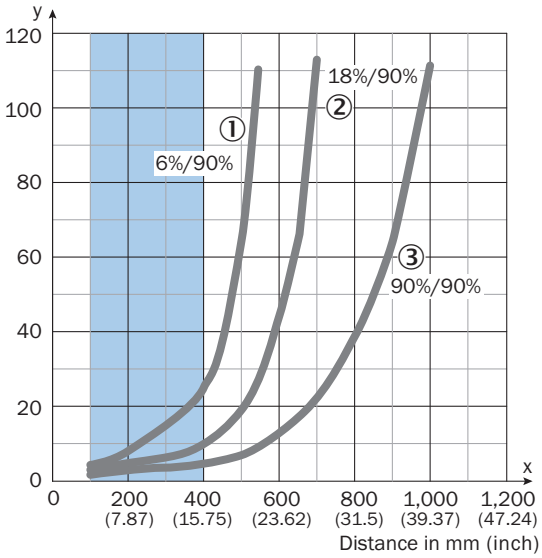

Recommended sensing range for the best performance

① Black object, 6% remission factor
② Gray object, 18% remission factor
③ White object, 90% remission factor

Example:
Safe suppression of the background

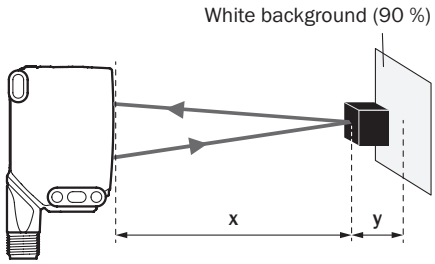

Black object (6 % remission)
Set sensing range x = 400 mm
Needed minimum distance to white background y = 25 mm

LIGHT SPOT SIZE WTB16P-XXXXX1XX, WTB16P-XXXXXAXX

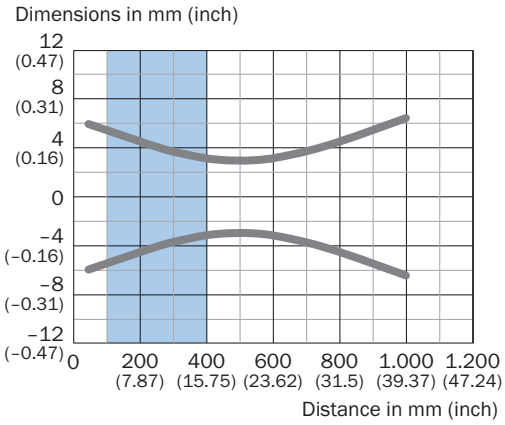

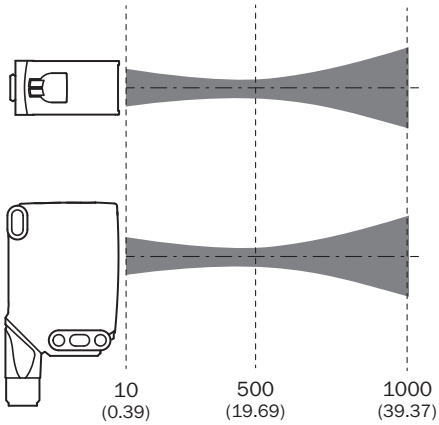

Recommended sensing range for the best performance

SENSING RANGE DIAGRAM

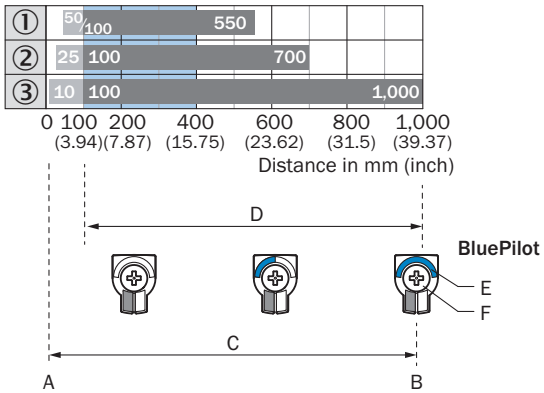

Recommended sensing range for the best performance

1	Black object, 6% remission factor
2	Gray object, 18% remission factor
3	White object, 90% remission factor
A	Sensing range min. in mm
B	Sensing range max. in mm
C	Field of view
D	Adjustable switching threshold for background suppression
E	Sensing range indicator
F	Teach-Turn adjustment

Further information as well as suitable accessories, example applications and downloads such as CAD dimensional models, operating instructions and software can be found at www.sick.com/1222716

SICK AG
WALDKIRCH
GERMANY
SICK.COM

SICK AT A GLANCE

SICK is a leading global technology company for intelligent sensors and integrated solutions in industrial automation. Our technologies set benchmarks, making your industrial processes more efficient, safer and more sustainable – both in logistics and manufacturing operations.

SICK combines sensor intelligence with industry expertise and certified consulting services. We provide the ideal foundation for scalable as well as tailor-made automation solutions and create added value along the entire value chain. Our close partnerships with our customers are more than just a promise: Together, we optimize productivity, improve quality, protect health and safety, and help build a sustainable future. All with empathy and trust.

Since 1946, we have been developing innovative technologies with passion and a pioneering spirit. With a global network in around 40 countries, SICK has a global presence and is always close by. The company's headquarters are located in Waldkirch near Freiburg, Germany. Our customers benefit from our understanding of both local and global requirements, which enables us to deliver tailor-made solutions

SICK
Sensor Intelligence