SICK.COM

DATA SHEET

WLL80P-22T6Y1DZA71Z1Z1

WLL80
Fiber-optic sensors

SICK Sensor Intelligence

Illustration may differ

FIBER-OPTIC SENSORS

WLL80P-22T6Y1DZA71Z1Z1

ORDERING INFORMATION

Type	part no.
WLL80P-22T6Y1DZA71Z1Z1	6076723

Further device versions and accessories at www.sick.com/WLL80

DETAILED TECHNICAL DATA

FEATURES

Device type	Fiber-optic amplifier
Device type detail	Stand-alone
Functional principle detail	Depending on the optical fiber cable used
Sensing range max.	Depending on the optical fiber cable used
Emitted beam	
Light source	LED
Type of light	Visible red light
Key LED figures	
Normative reference	EN 62471:2008-09 | IEC 62471:2006, modified
LED risk group marking	Free group
Wave length	660 nm
Average service life	100,000 h at T_a = +25 °C
Adjustment	
IO-Link	For configuring the sensor parameters and Smart Task functions
Wire/pin	For deactivating the sender and executing the test logic/for setting the sensing range/for resetting the counter
Display + operating buttons	For configuring the sensor parameters
Display	
LED green	Operating indicator Static on: power on Flashing: IO-Link mode
LED yellow 1	Status of received light beam Static on: object present Static off: object not present Flashing: Executing teach-in/teach-in error
LED yellow 2	Status of received light beam Static on: object present Static off: object not present Flashing: Executing teach-in/teach-in error
Display	Display of sensor functions Menu languages. German, English, Chinese, Korean, Japanese
Items supplied	BEF-WLL180 mounting bracket

SAFETY-RELATED PARAMETERS

$MTTF_D$	324.1 years
DC_{avg}	0%
T_M (mission time)	20 years

COMMUNICATION INTERFACE

IO-Link	✓, IO-Link V1.1
Data transmission rate	COM3 (230.4 kbit/s)
Cycle time	0.5 ms
Process data length	32 Bit
Process data structure	Bit 0 = switching signal Q_{L1}
	Bit 1 = switching signal Q_{L2}
	Bit 2 = detection signal Qint.1
	Bit 3 = detection signal Qint.2
	Bit 16 ... 31 = Current receiver level (live)
Compatible master port type	A
SIO mode support	Yes

ELECTRONICS

Supply voltage U_B	12 V DC ... 30 V DC [1] [2]
Ripple	± 10 % [3]
Current consumption	≤ 50 mA [4]

[1] Limit values.

[2] IO-Link mode: 18 VDC ... 30 VDC.

[3] May not fall below or exceed U_v tolerances.

[4] Without load.

[5] Selectable via menu.

[6] With light/dark ratio 1:1.

Protection class	III
Digital output	
Number	2 (individually adjustable)
Type	Push-pull: PNP/NPN [5] PNP NPN: open collector
Switching mode	Light/dark switching
Signal voltage PNP HIGH/LOW	Approx. U_B-2.5 V / 0 V
Signal voltage NPN HIGH/LOW	Approx. U_B / < 2.5 V
Output current $I_{max.}$	≤ 100 mA
Circuit protection outputs	Reverse polarity protected Overcurrent protected Short-circuit protected
Response time	≤ 16 µs ≤ 70 µs ≤ 250 µs ≤ 500 µs ≤ 1,000 µs ≤ 2,000 µs ≤ 8,000 µs
Switching frequency	31.2 kHz [6] 7.1 kHz 2 kHz 1 kHz 500 Hz 250 Hz 62.5 Hz
Time functions	Switch-on delay Off delay ON and OFF delay Impulse (one shot) Switch-on delay and pulse Deactivated
Delay time	Adjustment via operating buttons / via IO-Link, 0 ms ... 30,000 ms
Pin/Wire assignment	
Function of pin 4/black (BK)	Digital output, object present → Output Q_{L1} HIGH IO-Link communication C
Function of pin 4/black (BK) – detail	The pin 4 function of the sensor can be configured Additional possible settings via IO-Link
Function of pin 2/white (WH)	Digital output, object present → Output Q_{L2} HIGH
Function of pin 2/white (WH) – detail	The pin 2 function of the sensor can be configured Additional possible settings via IO-Link

[1] Limit values.

[2] IO-Link mode: 18 VDC ... 30 VDC.

[3] May not fall below or exceed U_V tolerances.

[4] Without load.

[5] Selectable via menu.

[6] With light/dark ratio 1:1.

MECHANICS

Housing	Rectangular
Dimensions (W x H x D)	10.5 mm x 33.2 mm x 79.9 mm
Connection	Male connector M8, 4-pin
Material	
Housing	Plastic, PC
Protection hood	Plastic, PC
Operating buttons	Plastic, Rubber
Male connector	Metal, nickel-plated brass

Weight	Approx. 24 g

AMBIENT DATA

Enclosure rating	IP54 (EN 60529)
Ambient operating temperature	–25 °C ... +55 °C
Ambient temperature, storage	–40 °C ... +70 °C
Typ. Ambient light immunity	Artificial light: ≤ 16,000 lx Sunlight: ≤ 67,000 lx
Shock resistance	50 g, 11 ms (3 positive and 3 negative shocks along X, Y, Z axes, 18 total shocks (EN60068-2-27))
Vibration resistance	10 Hz ... 55 Hz (Amplitude 1 mm, 3 x 30 min (EN60068-2-6))
Air humidity	35 % ... 85 %, relative humidity (no condensation)
Electromagnetic compatibility (EMC)	EN 60947-5-2

SMART TASK

Smart Task name	Counter + debouncing
Logic function	Direct WINDOW Hysteresis
Timer function	Deactivated Switch-on delay Off delay ON and OFF delay Impulse (one shot) Switch-on delay and pulse
Inverter	Yes
Switching signal	
Switching signal Q_{L1}	Switching output
Switching signal Q_{L2}	Switching output

DIAGNOSIS

Quality of run	Yes

CERTIFICATES

EU declaration of conformity	✓
UK declaration of conformity	✓
ACMA declaration of conformity	✓
Moroccan declaration of conformity	✓
China RoHS	✓
China Compulsory Product Certification (CCC) exempt	✓
cULus certificate	✓
IO-Link certificate	✓
Photobiological safety (DIN EN 62471) certificate	✓
Information according to Art. 3 of Data Act (Regulation EU 2023/2854)	✓

DISPLAY AND ADJUSTMENT ELEMENTS

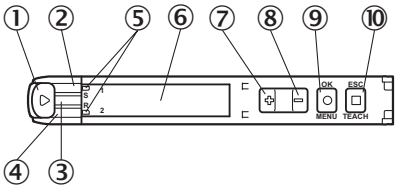

① Fiber optic interlock
② LED yellow 1
③ LED green
④ LED yellow 2
⑤ Indicator for correctly inserted fibers
⑥ Display
⑦ (+) button
⑧ (-) pushbutton
⑨ Menu/OK pushbutton
⑩ Teach-in/escape pushbutton

CONNECTION TYPE MALE CONNECTOR M8, 4-PIN

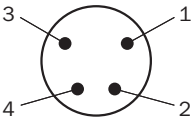

CONNECTION DIAGRAM CD-527

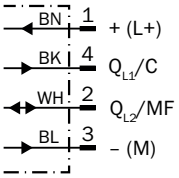

DIMENSIONAL DRAWING

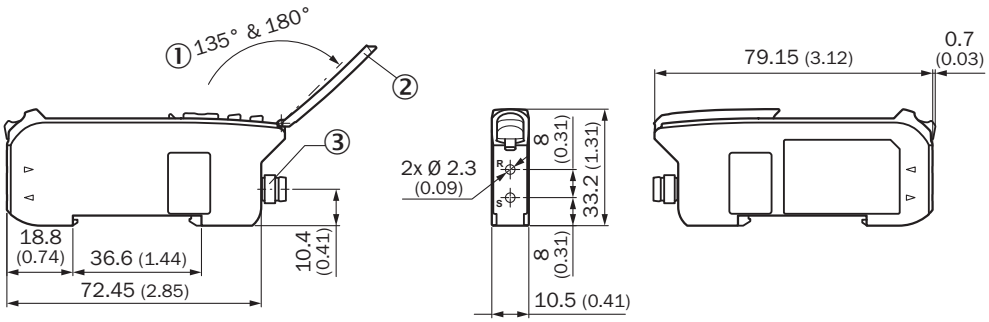

Dimensions in mm (inch)
① aperture angle
② Hinged cover for the pushbuttons
③ Connection

Further information as well as suitable accessories, example applications and downloads such as CAD dimensional models, operating instructions and software can be found at www.sick.com/6076723

SICK AG
WALDKIRCH
GERMANY
SICK.COM

SICK AT A GLANCE

SICK is a leading global technology company for intelligent sensors and integrated solutions in industrial automation. Our technologies set benchmarks, making your industrial processes more efficient, safer and more sustainable – both in logistics and manufacturing operations.

SICK combines sensor intelligence with industry expertise and certified consulting services. We provide the ideal foundation for scalable as well as tailor-made automation solutions and create added value along the entire value chain. Our close partnerships with our customers are more than just a promise: Together, we optimize productivity, improve quality, protect health and safety, and help build a sustainable future. All with empathy and trust.

Since 1946, we have been developing innovative technologies with passion and a pioneering spirit. With a global network in around 40 countries, SICK has a global presence and is always close by. The company's headquarters are located in Waldkirch near Freiburg, Germany. Our customers benefit from our understanding of both local and global requirements, which enables us to deliver tailor-made solutions

SICK
Sensor Intelligence