SICK.COM

DATA SHEET

IQR40-20BPPKC0K

IMR
Inductive proximity sensors

SICK Sensor Intelligence

INDUCTIVE PROXIMITY SENSORS

IQR40-20BPPKC0K

ORDERING INFORMATION

Type	part no.
IQR40-20BPPKC0K	6069283

Further device versions and accessories at www.sick.com/IMR

DETAILED TECHNICAL DATA

FEATURES

Housing	Rectangular
Housing	Short-body
Dimensions (W x H x D)	40 mm x 40 mm x 65 mm
Sensing range S_n	20 mm
Safe sensing range S_a	16.2 mm
Installation type	Flush
Switching frequency	250 Hz
Connection type	Male connector M12, 4-pin
Switching output	PNP
Switching output detail	PNP
Output function	Complementary
Electrical wiring	DC 4-wire
Enclosure rating	IP68
Special features	Reduction factor 1, Magnetic-field-resistant
Special applications	Welding range, Difficult application conditions
Items supplied	Clamp-lock mounting system (1x)

MECHANICS/ELECTRONICS

Supply voltage	10 V DC ... 30 V DC
Ripple	≤ 10 %

[1] At I_a max.

[2] Supply voltage U_B and constant ambient temperature Ta.

[3] Of Sr.

[4] –25 °C ... +70 °C.

[5] Reference voltage: 50 V DC.

Voltage drop	≤ 1.8 V [1]
Hysteresis	3 % ... 15 %
Reproducibility	≤ 2 % [2] [3]
Temperature drift (of S_r)	≤ ± 10 % ≤ ± 15 % [4]
Continuous current I_a	≤ 200 mA
No load current	≤ 15 mA
Off-state current	≤ 0.1 mA
Short-circuit protection	✓
Magnetic field strength	≤ 100 mT
Shock and vibration resistance	30 g, 11 ms / 10 ... 55 Hz, 1 mm
Ambient operating temperature	–30 °C ... +85 °C
Housing material	Plastic, PBT
Sensing face material	Plastic, PBT
Protection class	II [5]
UL File No.	E191603

[1] At I_a max.

[2] Supply voltage U_B and constant ambient temperature Ta.

[3] Of Sr.

[4] –25 °C ... +70 °C.

[5] Reference voltage: 50 V DC.

SAFETY-RELATED PARAMETERS

$MTTF_D$	139 years
DC_{avg}	0%
T_M (mission time)	20 years

REDUCTION FACTORS

Note	The values are reference values which may vary
Reduction factor	Reduction factor 1
Stainless steel (V2A, 304)	1
Aluminum (Al)	1
Copper (Cu)	1
Brass (Br)	1

INSTALLATION NOTE

Remark	Associated graphic see "Installation"
A	20 mm
B	40 mm
C	40 mm
D	90 mm
E	0 mm
F	180 mm

CERTIFICATES

EU declaration of conformity	✓

China RoHS	✓
China Compulsory Product Certification (CCC) exempt	✓
cULus certificate	✓

INSTALLATION NOTE

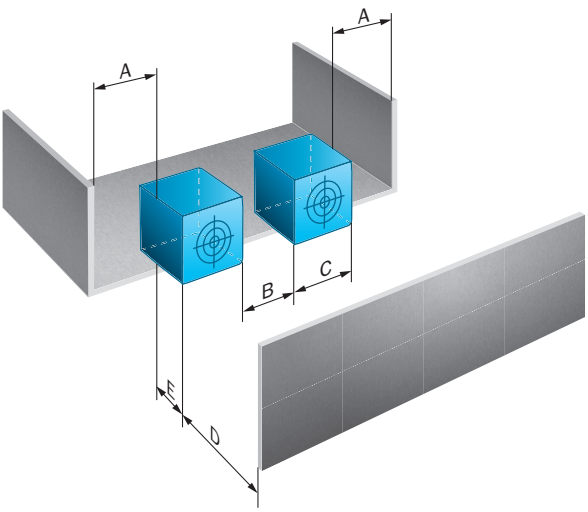

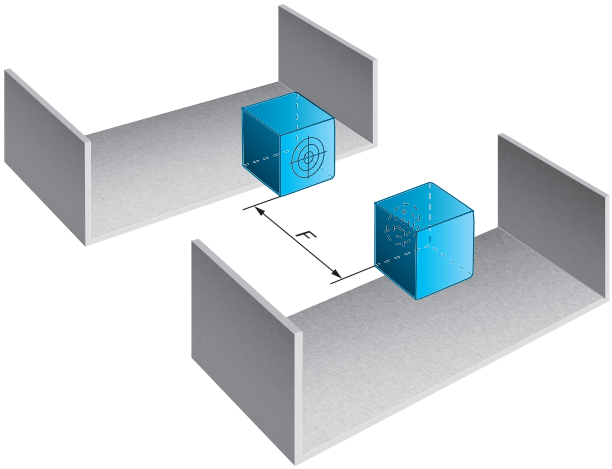

CONNECTION DIAGRAM CD-009

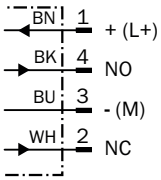

RESPONSE DIAGRAM

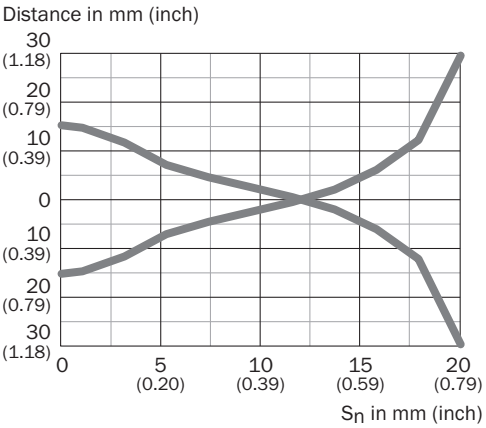

DIMENSIONAL DRAWING

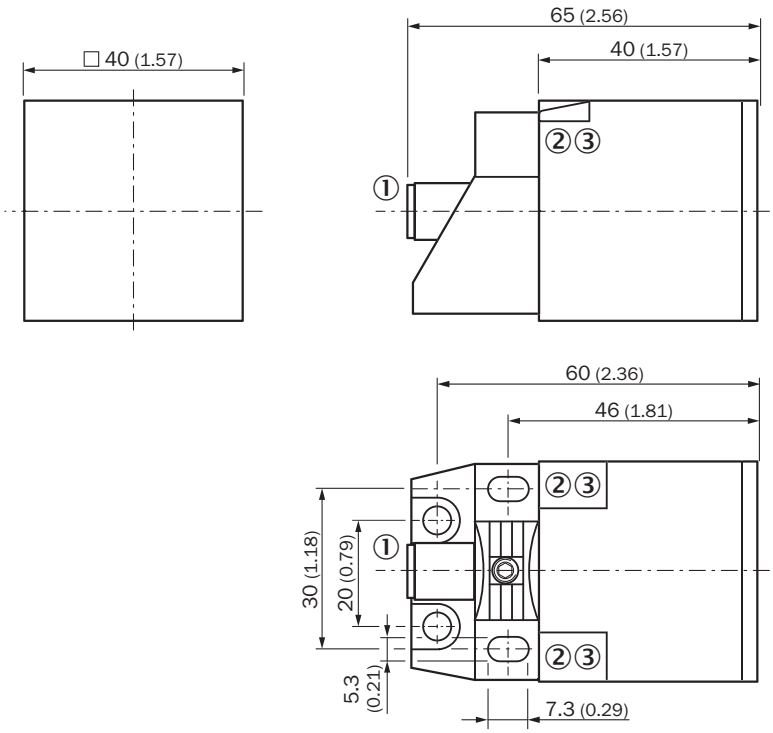

Dimensions in mm (inch)
① M12 x 1
② LED output state, yellow
③ operational status LED, green

Further information as well as suitable accessories, example applications and downloads such as CAD dimensional models, operating instructions and software can be found at www.sick.com/6069283

SICK AG
WALDKIRCH
GERMANY
SICK.COM

SICK AT A GLANCE

SICK is a leading global technology company for intelligent sensors and integrated solutions in industrial automation. Our technologies set benchmarks, making your industrial processes more efficient, safer and more sustainable – both in logistics and manufacturing operations.

SICK combines sensor intelligence with industry expertise and certified consulting services. We provide the ideal foundation for scalable as well as tailor-made automation solutions and create added value along the entire value chain. Our close partnerships with our customers are more than just a promise: Together, we optimize productivity, improve quality, protect health and safety, and help build a sustainable future. All with empathy and trust.

Since 1946, we have been developing innovative technologies with passion and a pioneering spirit. With a global network in around 40 countries, SICK has a global presence and is always close by. The company's headquarters are located in Waldkirch near Freiburg, Germany. Our customers benefit from our understanding of both local and global requirements, which enables us to deliver tailor-made solutions

SICK
Sensor Intelligence