SICK.COM

DATA SHEET

YM12U13-2550K4051A

Field-wireable connectors
Connectors and cables

SICK Sensor Intelligence

CONNECTORS AND CABLES

YM12U13-2550K4051A

ORDERING INFORMATION

Type	part no.
YM12U13-2550K4051A	2109290

Further device versions and accessories at www.sick.com/Field-wireable_connectors

DETAILED TECHNICAL DATA

TECHNICAL SPECIFICATIONS

Connection type head A	Male connector, M12, 3-pin, straight, A-coded
Connection type	IDC quick connection
Locking plug connector	Screw connection
Connector material	TPU
Connector color	Black
Locking nut material	Zinc die-cast, nickel-plated
Seal material	PUR
Tightening torque	0.6 Nm
Width across flats	13
Permitted cable diameter	4 mm ... 5.1 mm
Permitted cross-section	0.25 mm² ... 0.5 mm²
Reference voltage	32 V AC 32 V DC
Rated impulse voltage	0.8 kV
Current loading	4 A
Signal type	Sensor/actuator cable
Application	Zones with oils and lubricants
Enclosure rating	IP67
Operating temperature Head	–25 °C ... +85 °C
Contamination rating	3
Insulation resistance	100 MΩ
Overvoltage category	III
Specific insulation resistance	30 mΩ

CERTIFICATES

EU declaration of conformity	✓
UK declaration of conformity	✓
China RoHS	✓
China Compulsory Product Certification (CCC) exempt	✓

DIMENSIONAL DRAWING

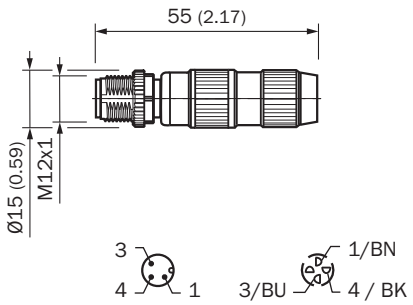

Dimensions in mm (inch)

INSTALLATION DRAWING

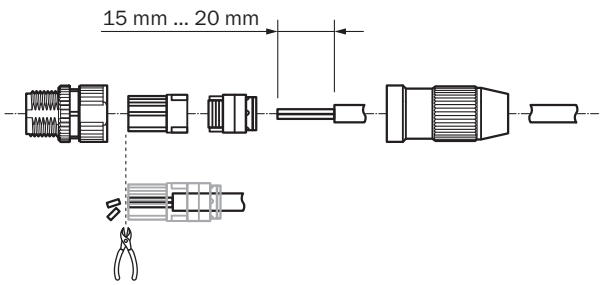

Further information as well as suitable accessories, example applications and downloads such as CAD dimensional models, operating instructions and software can be found at www.sick.com/2109290

SICK AG
WALDKIRCH
GERMANY
SICK.COM

SICK AT A GLANCE

SICK is a leading global technology company for intelligent sensors and integrated solutions in industrial automation. Our technologies set benchmarks, making your industrial processes more efficient, safer and more sustainable – both in logistics and manufacturing operations.

SICK combines sensor intelligence with industry expertise and certified consulting services. We provide the ideal foundation for scalable as well as tailor-made automation solutions and create added value along the entire value chain. Our close partnerships with our customers are more than just a promise: Together, we optimize productivity, improve quality, protect health and safety, and help build a sustainable future. All with empathy and trust.

Since 1946, we have been developing innovative technologies with passion and a pioneering spirit. With a global network in around 40 countries, SICK has a global presence and is always close by. The company's headquarters are located in Waldkirch near Freiburg, Germany. Our customers benefit from our understanding of both local and global requirements, which enables us to deliver tailor-made solutions

SICK
Sensor Intelligence