SICK.COM

DATA SHEET

WL8-P2131

W8
Photoelectric sensors

SICK Sensor Intelligence

Illustration may differ

PHOTOELECTRIC SENSORS

WL8-P2131

ORDERING INFORMATION

Type	part no.
WL8-P2131	6033180

Further device versions and accessories at www.sick.com/W8

DETAILED TECHNICAL DATA

FEATURES

Functional principle	Photoelectric retro-reflective sensor
Functional principle detail	Without reflector minimum distance (autocollimation/coaxial optics)
Dimensions (W x H x D)	11 mm x 31 mm x 20 mm
Housing design (light emission)	Rectangular
Sensing range max.	0 m ... 4 m [1]
Sensing range	0 m ... 3 m [1]
Type of light	Visible red light
Light source	LED [2]
Light spot size (distance)	Ø 30 mm (1 m)
Wave length	650 nm
Adjustment	Potentiometer, 270°
Special applications	Detection of objects moving at high speeds

[1] Reflector PL80A.

[2] Average service life: 100,000 h at T_U = +25 °C.

MECHANICS/ELECTRONICS

Supply voltage U_B	10 V DC ... 30 V DC [1]
Ripple	± 10 % [2]
Current consumption	30 mA [3]
Switching output	PNP
Switching mode	Light/dark switching
Switching mode selector	Selectable via light/dark rotary switch
Signal voltage PNP HIGH/LOW	Approx. V_S – 1.8 V / 0 V
Output current $I_{max.}$	≤ 100 mA
Response time	≤ 0.25 ms [4]
Switching frequency	2,000 Hz [5]
Connection type	Connector M8, 3-pin
Circuit protection	A [6] B [7] D [8]
Weight	10 g
Housing material	Plastic, ABS
Optics material	Plastic, PMMA
Enclosure rating	IP67
Items supplied	Stainless steel mounting bracket (1.4301/304) BEF-W100-A, Reflector P250
Ambient operating temperature	–25 °C ... +55 °C
Ambient temperature, storage	–40 °C ... +70 °C

[1] Limit values when operated in short-circuit protected network: max. 8 A.

[2] May not fall below or exceed U_V tolerances.

[3] Without load.

[4] Signal transit time with resistive load.

[5] With light/dark ratio 1:1.

[6] A = V_S connections reverse-polarity protected.

[7] B = inputs and output reverse-polarity protected.

[8] D = outputs overcurrent and short-circuit protected.

SAFETY-RELATED PARAMETERS

$MTTF_D$	1,018.3 years
DC_{avg}	0 %

CERTIFICATES

EU declaration of conformity	✓
UK declaration of conformity	✓
ACMA declaration of conformity	✓
Moroccan declaration of conformity	✓
China RoHS	✓
China Compulsory Product Certification (CCC) exempt	✓
Photobiological safety (DIN EN 62471) certificate	✓

ADJUSTMENTS WL8

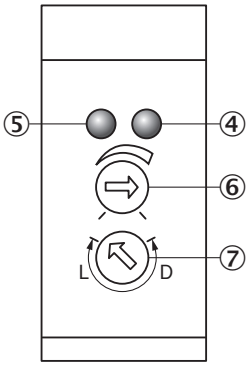

④ Orange LED indicator : switching output active
⑤ LED indicator green: stability indicator
⑥ sensitivity control
⑦ Light/ dark rotary switch: L = light switching, D = dark switching

CONNECTION TYPE

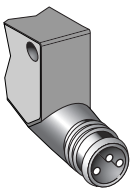

CONNECTION DIAGRAM CD-045

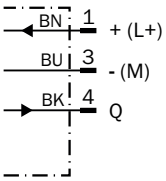

CHARACTERISTIC CURVE WL8

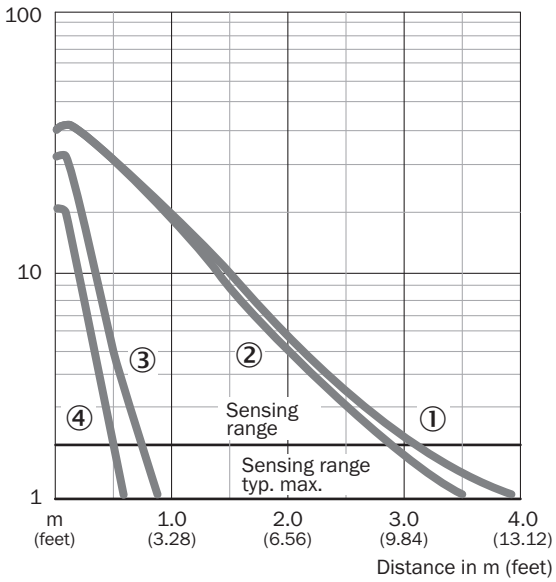

① Reflector PL80A
② Reflector P250
③ P45
④ Reflective tape Diamond Grade

SENSING RANGE DIAGRAM WL8

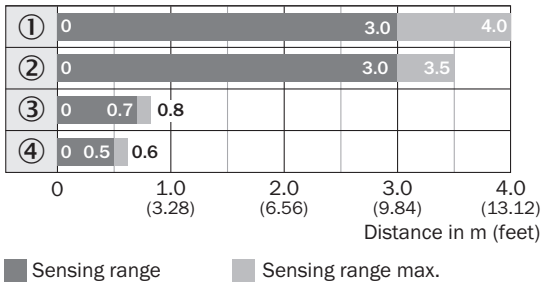

① Reflector PL80A
② Reflector P250
③ P45
④ Reflective tape Diamond Grade

DIMENSIONAL DRAWING WL8

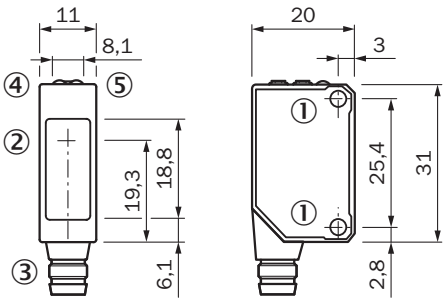

Dimensions in mm (inch)
① Threaded mounting hole M3, max. tightening torque: 0.6 Nm
② Center of optical axis
③ Connection
④ Orange LED indicator : switching output active
⑤ LED indicator green: stability indicator

Further information as well as suitable accessories, example applications and downloads such as CAD dimensional models, operating instructions and software can be found at www.sick.com/6033180

SICK AG
WALDKIRCH
GERMANY
SICK.COM

SICK AT A GLANCE

SICK is a leading global technology company for intelligent sensors and integrated solutions in industrial automation. Our technologies set benchmarks, making your industrial processes more efficient, safer and more sustainable – both in logistics and manufacturing operations.

SICK combines sensor intelligence with industry expertise and certified consulting services. We provide the ideal foundation for scalable as well as tailor-made automation solutions and create added value along the entire value chain. Our close partnerships with our customers are more than just a promise: Together, we optimize productivity, improve quality, protect health and safety, and help build a sustainable future. All with empathy and trust.

Since 1946, we have been developing innovative technologies with passion and a pioneering spirit. With a global network in around 40 countries, SICK has a global presence and is always close by. The company's headquarters are located in Waldkirch near Freiburg, Germany. Our customers benefit from our understanding of both local and global requirements, which enables us to deliver tailor-made solutions

SICK
Sensor Intelligence