SICK.COM



DATA SHEET

DFS20A-A2BAC008192

DFS2x
Incremental encoders

SICK Sensor Intelligence



Illustration may differ

INCREMENTAL ENCODERS

DFS20A-A2BAC008192

ORDERING INFORMATION

Type	part no.
DFS20A-A2BAC008192	1084017

Further device versions and accessories at www.sick.com/DFS2x

DETAILED TECHNICAL DATA

SAFETY-RELATED PARAMETERS

$MTTF_D$ (mean time to dangerous failure)	330 years (EN ISO 13849-1) [1]

[1] This product is a standard product and does not constitute a safety component as defined in the Machinery Directive. Calculation based on nominal load of components, average ambient temperature 40°C, frequency of use 8760 h/a. All electronic failures are considered hazardous. For more information, see document no. 8015532.

PERFORMANCE

Pulses per revolution	8,192
Measuring step	± 90°, electric/pulses per revolution
Measuring step deviation	± 0.008° pulses 100 ... 10,000
Error limits	± 0.03°

INTERFACES

Communication interface	Incremental
Communication Interface detail	HTL / Push-Pull
Number of signal channels	6-channel
Initialization time	40 ms [1]
Output frequency	820 kHz
Load current	30 mA
Power consumption	0.7 W (without load)

[1] Valid positional data can be read once this time has elapsed.

ELECTRONICS

Connection type	Male connector, M12, 8-pin, radial [1]
Supply voltage	8 ... 30 V
Reference signal, number	1
Reference signal, position	180°, electrical, logically gated with BN2
Code sequence	Counterclockwise
Reverse polarity protection	✓
Short-circuit protection of the outputs	✓ [2]

[1] The Zero-Set function is not available with 6-pin MS connector or M12 connector options.

[2] Short-circuit opposite to another channel or GND permissable for maximum 30 s.

MECHANICS

Mechanical design	Solid shaft, Square flange
Shaft diameter	3/8″ With flat
Shaft length	16 mm
Weight	+ 0.4 kg [1]
Shaft material	Stainless steel 1,4305
Flange material	Aluminum
Housing material	Aluminum
Start up torque	0.5 Ncm (+20 °C)
Operating torque	0.3 Ncm (+20 °C)
Permissible shaft loading	80 N (radial) 40 N (axial)
Operating speed	≤ 9,000 min^{-1}
Moment of inertia of the rotor	15 gcm^2
Bearing lifetime	3.6 x 10^9 revolutions
Angular acceleration	≤ 500,000 rad/s^2

[1] Based on encoder with MS male connector.

AMBIENT DATA

EMC	According to EN 61000-6-2 and EN 61000-6-3
Enclosure rating	IP65, shaft side (IEC 60529) IP67, housing side (IEC 60529)
Permissible relative humidity	90 % (Condensation not permitted)
Operating temperature range	–30 °C ... +85 °C
Storage temperature range	–40 °C ... +100 °C, without package
Resistance to shocks	100 g, 11 ms (EN 60068-2-27)
Resistance to vibration	30 g, 10 Hz ... 2,000 Hz (EN 60068-2-6)

CERTIFICATES

EU declaration of conformity	✓
UK declaration of conformity	✓
ACMA declaration of conformity	✓
China RoHS	✓
Information according to Art. 3 of Data Act (Regulation EU 2023/2854)	✓

DIMENSIONAL DRAWING DFS20 SQUARE FLANGE MOUNT, RADIAL CONNECTOR OUTLET M12 AND MS, CABLE OUTLET

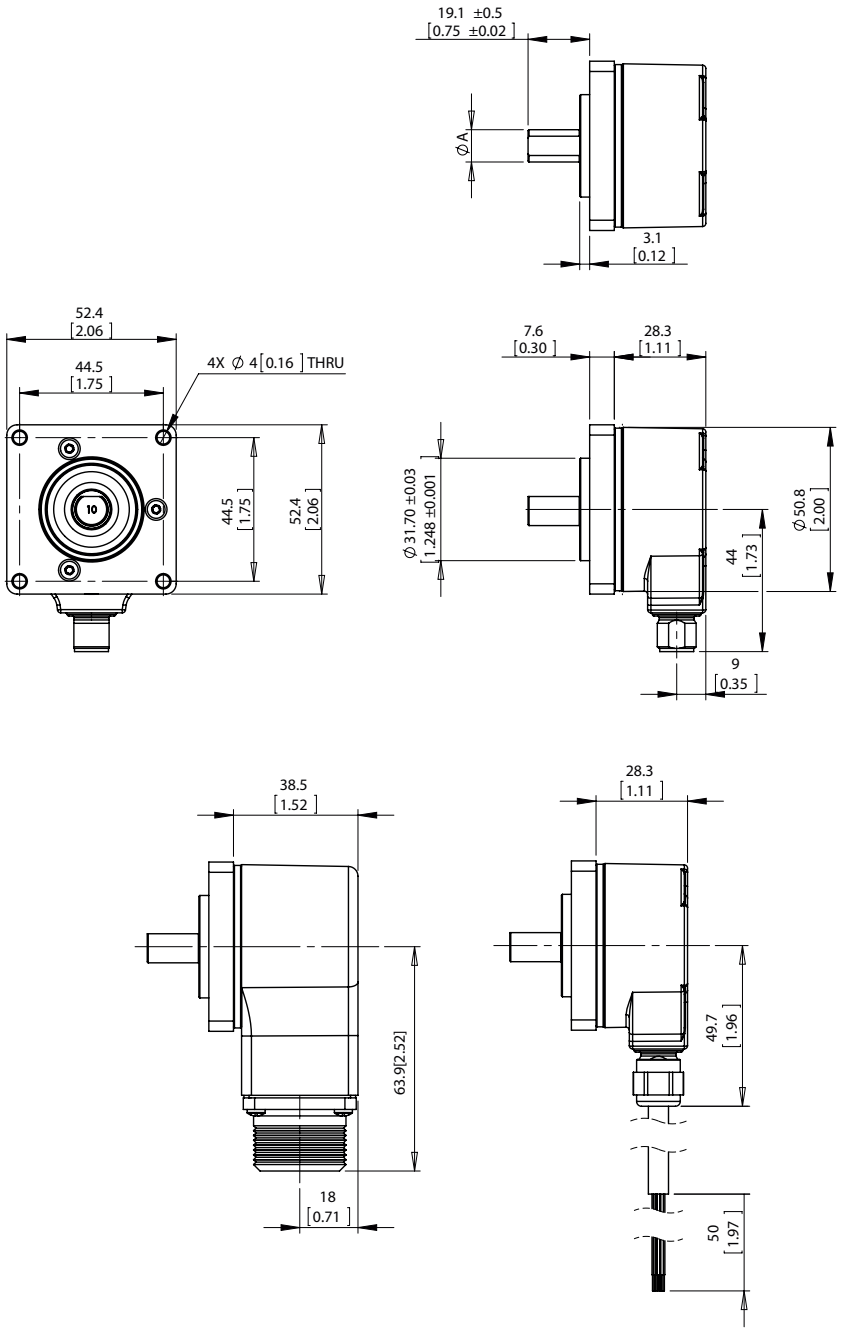

Dimensions in mm (inch)

Type	Shaft diameterA
DFS2x-x1xxxxxxxx	1/4″
DFS2x-x2xxxxxxxxDFS2x-xCxxxxxxxx	3/8″
DFS2x-xFxxxxxxxx	1/2″
DFS2x-x3xxxxxxxx	6 mm
DFS2x-x4xxxxxxxx	10 mm

ANSCHLUSSBELEGUNG VIEW OF M12 MALE DEVICE CONNECTOR ON ENCODER

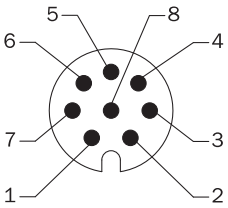

M12, 8-pin	MS, 10-pin	MS, 7-pin	MS, 6-pin	Cable, 9-wire	Signal	Description
1	H	-	-	Brown	¯A	Signal wire
2	A	A	E	White	A	Signal wire
3	I	-	-	Black	¯B	Signal wire
4	B	B	D	Pink	B	Signal wire
5	J	-	-	Yellow	¯Z	Signal wire
6	C	C	C	Purple	Z	Signal wire
7	F	F	A	Blue	GND	GND
8	D	D	B	Red	Us	Supply voltage
-	E	E	-	Orange	0-SET	Input signal
-	G	G	F	-	Housing	Electrically connected to the housing potential
-	-	-	-	Blank	Drain wire	Bare wire parallel to the braided screen
-	-	-	-	Shielding	Shielding	Shielding connected to housing on encoder side

DIAGRAMS SIGNAL OUTPUTS WITH COUNTER CLOCK-WISE COUNTING DIRECTION OPTION SELECTED (B LEADS A FOR CLOCK-WISE ROTATION). COMPLEMENT SIGNALS AN, BN AND ZN ARE NOT SHOWN.

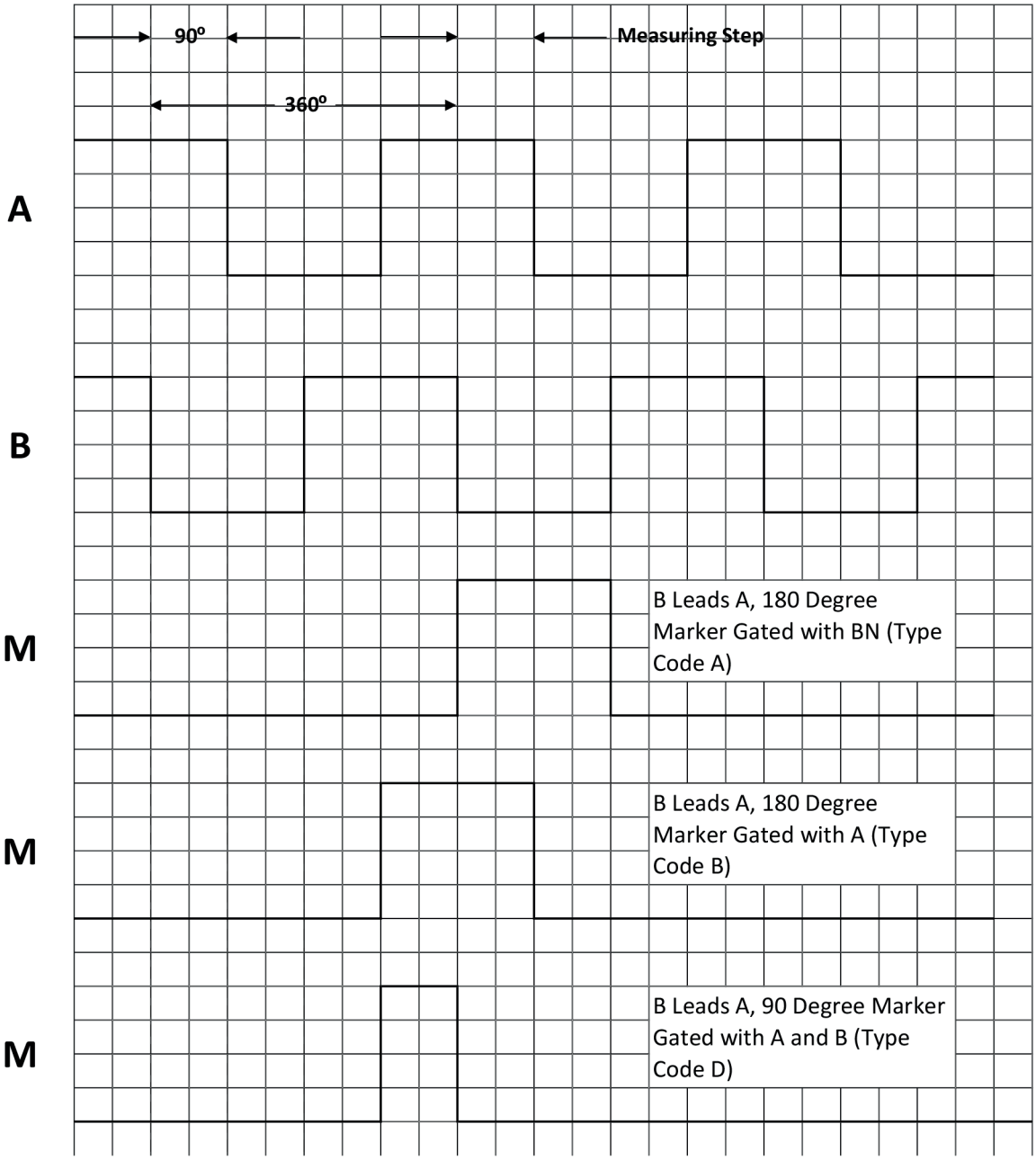

Cw with view on the encoder shaft in direction "A", compare dimensional drawing.

DIAGRAMS SIGNAL OUTPUTS WITH CLOCK-WISE COUNTING DIRECTION OPTION SELECTED (A LEADS B FOR CLOCK-WISE ROTATION). COMPLEMENT SIGNALS AN, BN AND ZN ARE NOT SHOWN.

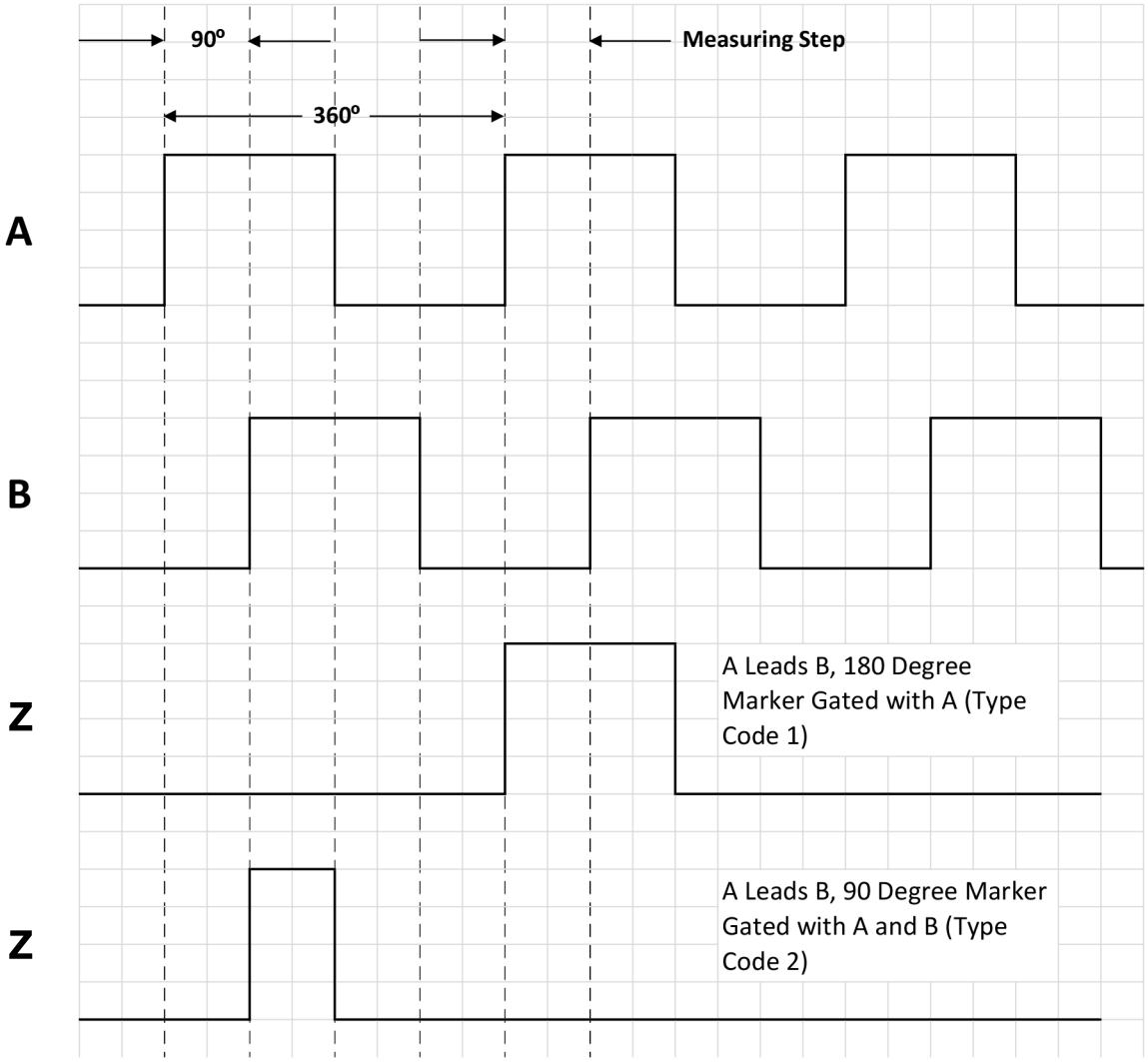

Cw with view on the encoder shaft in direction "A", compare dimensional drawing.

MAXIMUM REVOLUTION RANGE

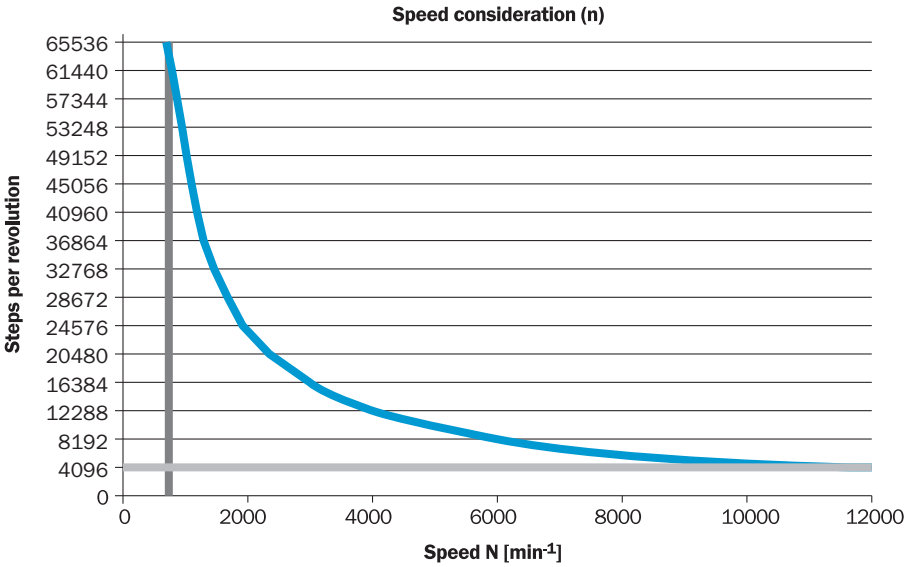

Further information as well as suitable accessories, example applications and downloads such as CAD dimensional models, operating instructions and software can be found at www.sick.com/1084017

SICK AG
WALDKIRCH
GERMANY
SICK.COM

SICK AT A GLANCE

SICK is a leading global technology company for intelligent sensors and integrated solutions in industrial automation. Our technologies set benchmarks, making your industrial processes more efficient, safer and more sustainable – both in logistics and manufacturing operations.

SICK combines sensor intelligence with industry expertise and certified consulting services. We provide the ideal foundation for scalable as well as tailor-made automation solutions and create added value along the entire value chain. Our close partnerships with our customers are more than just a promise: Together, we optimize productivity, improve quality, protect health and safety, and help build a sustainable future. All with empathy and trust.

Since 1946, we have been developing innovative technologies with passion and a pioneering spirit. With a global network in around 40 countries, SICK has a global presence and is always close by. The company's headquarters are located in Waldkirch near Freiburg, Germany. Our customers benefit from our understanding of both local and global requirements, which enables us to deliver tailor-made solutions

SICK

Sensor Intelligence