Data sheet

WTB4S-3P2234VS10

W4

PHOTOELECTRIC SENSORS

SICK
Sensor Intelligence.

Illustration may differ

Ordering information

Type	part no.
WTB4S-3P2234VS10	1058488

Other models and accessories → www.sick.com/W4

Detailed technical data

Features

Functional principle	Photoelectric proximity sensor
Functional principle detail	Background suppression
Sensing range max.	4 mm ... 120 mm [1]
Sensing range	10 mm ... 120 mm [1]
Emitted beam	
Light source	PinPoint LED [2]
Type of light	Visible red light
Light spot size (distance)	Ø 2.5 mm (50 mm)
Key LED figures	
Wave length	650 nm
Adjustment	Cable, Single teach-in button
Special features	Teach-in button lockable
Special applications	Hygienic and washdown zones
Housing design	Washdown

[1] Object with 90% remission (based on standard white, DIN 5033).
[2] Average service life: 100,000 h at T_U = +25 °C.

Electronics

Supply voltage U_B	10 V DC ... 30 V DC [1]
Ripple	< 5 V_{pp} [2]
Current consumption	30 mA [3]
Protection class	III
Digital output	
Type	PNP
Switching mode	Light switching
Output current $I_{max.}$	≤ 100 mA
Response time	< 0.5 ms [4]
Switching frequency	1,000 Hz [5]
Circuit protection	A [6] B [7] C [8]

[1] Limit values, reverse-polarity protected, operation in short-circuit protected network: max. 8 A.
[2] May not fall below or exceed U_V tolerances.
[3] Without load.
[4] Signal transit time with resistive load.
[5] With light/dark ratio 1:1.
[6] A = V_S connections reverse-polarity protected.
[7] B = inputs and output reverse-polarity protected.
[8] C = interference suppression.

Mechanics

Housing	Rectangular
Design detail	Slim
Dimensions (W x H x D)	15.25 mm x 44.9 mm x 22.2 mm
Connection	Male connector M8, 4-pin [1]
Material	
Housing	Metal, Stainless steel V4A (1.4404, 316L)
Front screen	Plastic, PMMA
Weight	40 g

[1] Max. tightening torque: 0.6 Nm.

Ambient data

Enclosure rating	IP66 IP67 IP68 IP69K [1]
Ambient operating temperature	–30 °C ... +70 °C [2] –30 °C ... +60 °C
Ambient temperature, storage	–30 °C ... +75 °C
UL File No.	NRKH.E181493 & NRKH7.E181493

[1] Only in case of correctly mounted IP69K connecting cable.
[2] At UV ≤ 24 V and IA < 30 mA.

Certificates

EU declaration of conformity	✓
UK declaration of conformity	✓
ACMA declaration of conformity	✓
Moroccan declaration of conformity	✓
China RoHS	✓
ECOLAB certificate	✓
Photobiological safety (DIN EN 62471) certificate	✓

Classifications

ECLASS 5.0	27270904
ECLASS 5.1.4	27270904
ECLASS 6.0	27270904
ECLASS 6.2	27270904
ECLASS 7.0	27270904
ECLASS 8.0	27270904
ECLASS 8.1	27270904
ECLASS 9.0	27270904
ECLASS 10.0	27270904
ECLASS 11.0	27270904
ECLASS 12.0	27270903
ETIM 5.0	EC002719
ETIM 6.0	EC002719
ETIM 7.0	EC002719
ETIM 8.0	EC002719
UNSPSC 16.0901	39121528

Connection diagram Cd-092

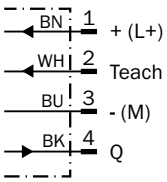

Characteristic curve WTB4S-3, 120 mm

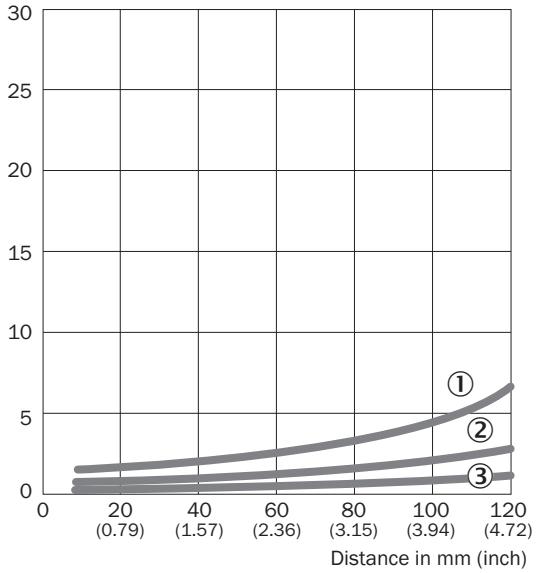

① Sensing range on black, 6% remission factor
② Sensing range on gray, 18% remission factor
③ Sensing range on white, 90% remission factor

Sensing range diagram WTB4S-3, 120 mm

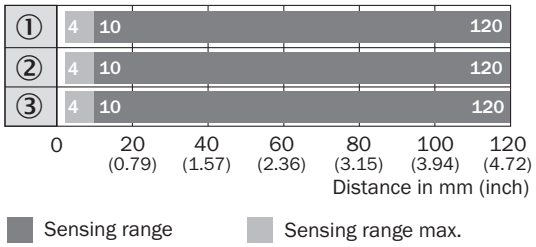

① Sensing range on black, 6% remission factor
② Sensing range on gray, 18% remission factor
③ Sensing range on white, 90% remission factor

Dimensional drawing WTB4S-3V, WTF4S-3V, Single teach-in button

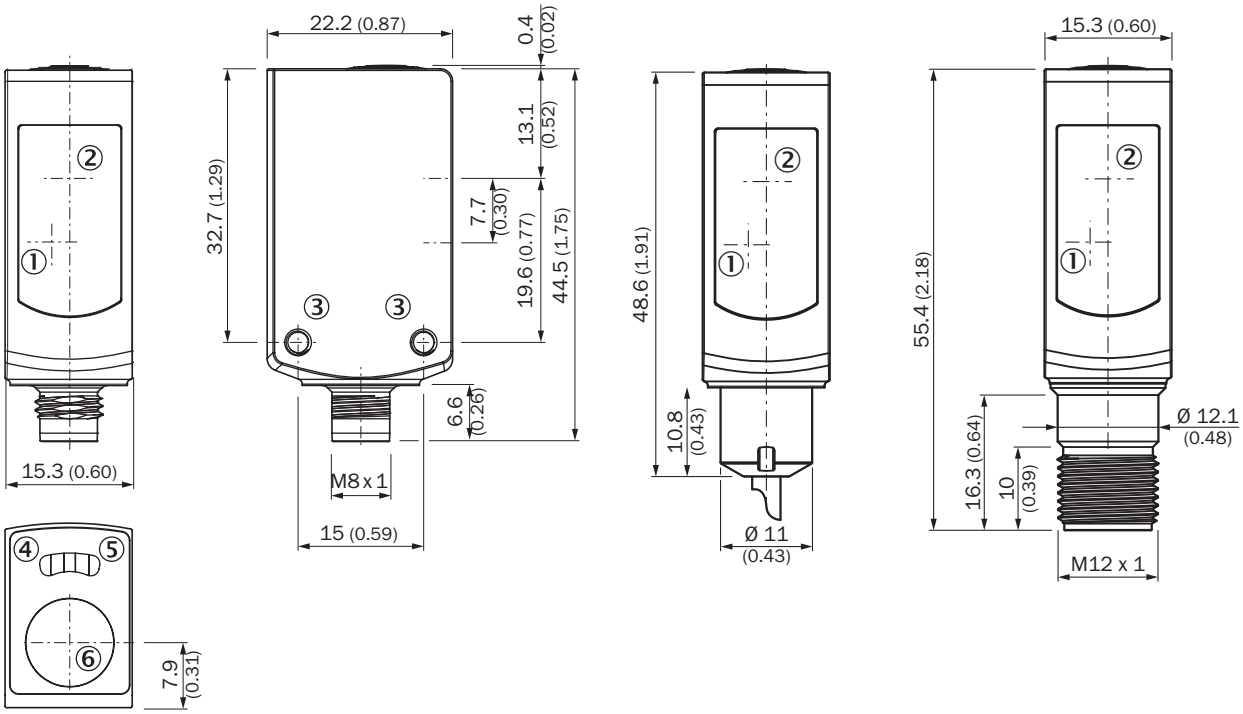

Dimensions in mm (inch)
① Center of optical axis, receiver
② Center of optical axis, sender
③ Threaded mounting hole M3
④ LED indicator yellow: Status of received light beam
⑤ LED indicator green: Supply voltage active
⑥ Teach-in button

Recommended accessories

Other models and accessories ➜ www.sick.com/W4

	Brief description	Type	part no.
Mounting systems			
	• **Description:** Mounting bracket for floor mounting • **Material:** Stainless steel • **Details:** Stainless steel 1.4571 • **Items supplied:** Mounting hardware included • **Suitable for:** W4S, W4F, W4S	BEF-W4-B	2051630
	• **Description:** Plate N02N for universal clamp bracket • **Material:** Stainless steel, stainless steel • **Details:** Stainless steel 1.4571 (sheet), Stainless steel 1.4408 (clamp) • **Items supplied:** Universal clamp (5322627), mounting hardware • **Usable for:** W4S-3 Glass, W10, W4SLG-3, W4S-3 Inox, W4S-3 Inox Glass, W9, W11-2, W12-3, W12-2 Laser, W12G, W12 Teflon, W16, W250, W250-2, PowerProx, W11G-2, TranspaTect, WTT12, UC12, P250, G6 Inox, W4S, W4SL-3V, W4SLG-3V, W4SL-3H	BEF-KHS-N02N	2051618
connectors and cables			
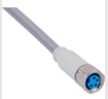	• **Connection type head A:** Female connector, M8, 4-pin, straight • **Connection type head B:** Flying leads • **Signal type:** Sensor/actuator cable • **Cable:** 5 m, 4-wire, PVC • **Description:** Sensor/actuator cable, unshielded • **Connection systems:** Flying leads • **Note:** This product is generally resistant to chemical cleaning agents (see ECOLAB). Please do not use cleaning agents of any other Kind., Not resistant against lactic acid & hydrogen peroxide (H2O2) • **Application:** Uncontaminated zones, Hygienic and washdown zones, Zones with chemicals	DOL-0804-G05MNI	6059194
	• **Connection type head A:** Female connector, M8, 4-pin, straight • **Connection type head B:** Flying leads • **Signal type:** Sensor/actuator cable • **Cable:** 5 m, 4-wire, PP • **Description:** Sensor/actuator cable, unshielded • **Connection systems:** Flying leads • **Note:** This product is generally resistant to chemical cleaning agents (see ECOLAB) and other chemical compounds such as H2O2 and CH2O2. Before permanent installation is carried out, the material's resistance to the cleaning agent being used must be checked., Resistant against lactic acid & hydrogen peroxide (H2O2) • **Application:** Hygienic and washdown zones, Drag chain operation, Robot, cold bending resistant, seawater resistant	DOL-0804-G05MRN	6058511

SICK AT A GLANCE

SICK is one of the leading manufacturers of intelligent sensors and sensor solutions for industrial applications. A unique range of products and services creates the perfect basis for controlling processes securely and efficiently, protecting individuals from accidents and preventing damage to the environment.

We have extensive experience in a wide range of industries and understand their processes and requirements. With intelligent sensors, we can deliver exactly what our customers need. In application centers in Europe, Asia and North America, system solutions are tested and optimized in accordance with customer specifications. All this makes us a reliable supplier and development partner.

Comprehensive services complete our offering: SICK LifeTime Services provide support throughout the machine life cycle and ensure safety and productivity.

For us, that is "Sensor Intelligence."

WORLDWIDE PRESENCE:

Contacts and other locations –www.sick.com

SICK
Sensor Intelligence.