SICK.COM

DATA SHEET

# CQF16-06EPSEW1

CQF
Capacitive proximity sensors

SICK Sensor Intelligence

Illustration may differ

## CAPACITIVE PROXIMITY SENSORS

# CQF16-06EPSEW1

### ORDERING INFORMATION

| Type | part no. |
|---|---|
| CQF16-06EPSEW1 | 6068622 |

Further device versions and accessories at www.sick.com/CQF

## DETAILED TECHNICAL DATA

### FEATURES

| | |
|---|---|
| Housing | Rectangular |
| Dimensions (W x H x D) | 16 mm x 34 mm x 8 mm |
| Sensing range $S_n$ | 0.5 mm ... 6 mm |
| Installation type | Flush<br>Non-flush |
| Switching frequency | 10 Hz |
| Connection type | Cable, 4-wire, 2 m [1] |
| Switching output | PNP |
| Switching output detail | PNP |
| Output function | NO |
| Electrical wiring | DC 4-wire |
| Adjustment<br>Wire/pin | <br>Teach-in (full or empty) |
| Enclosure rating | IP67, IP68, IP69K |
| Special features | Detection of water-based liquids with conductivity up to 50 mS/cm; container diameter: min. 8 mm; container thickness: 0.5 mm ... 6 mm (plastic), 0.5 mm ... 4 mm (glass) |
| Items supplied | Mounting bracket (1x) |

[1] Do not bend below 0 °C.

### MECHANICS/ELECTRONICS

| | |
|---|---|
| Supply voltage | 10 V ... 30 V |
| Ripple | ≤ 10 % |
| Voltage drop | ≤ 1.5 V DC [1] |
| Current consumption | 13 mA [2] |

[1] At $I_a$ max.

[2] Without load.

| | |
|---|---|
| Time delay before availability | ≤ 300 ms |
| Temperature drift (of $S_r$) | ± 20 % |
| EMC | EN 60947-5-2 |
| Continuous current $I_a$ | ≤ 100 mA |
| Cable material | PVC |
| Conductor size | 0.14 mm² |
| Short-circuit protection | ✓ |
| Power-up pulse protection | ✓ |
| Shock and vibration resistance | 30 g, 11 ms / 6 pos., 6 neg. per axis, 10 ... 150 Hz, 1.0 mm / 15 g |
| Ambient operating temperature | –25 °C ... +80 °C |
| Ambient temperature, storage | –40 °C ... +85 °C |
| Housing material | Plastic, PBT |
| Tightening torque, max. | 0.2 Nm |
| Protection class | III |
| UL File No. | NRKH.E191603 |

[1] At $I_a$ max.

[2] Without load.

## SAFETY-RELATED PARAMETERS

| | |
|---|---|
| $MTTF_D$ | 1,972 years |
| $DC_{avg}$ | 0 % |
| $T_M$ (mission time) | 20 years |

## INSTALLATION NOTE

| | |
|---|---|
| Remark | Associated graphic see "Installation" |
| A | ≥ 10 mm (at factory setting) |
| B | 16 mm |
| F | ≥ 25 mm (at factory setting) |

## CERTIFICATES

| | |
|---|---|
| EU declaration of conformity | ✓ |
| UK declaration of conformity | ✓ |
| Moroccan declaration of conformity | ✓ |
| China RoHS | ✓ |
| China Compulsory Product Certification (CCC) exempt | ✓ |
| cULus certificate | ✓ |

**INSTALLATION NOTE**

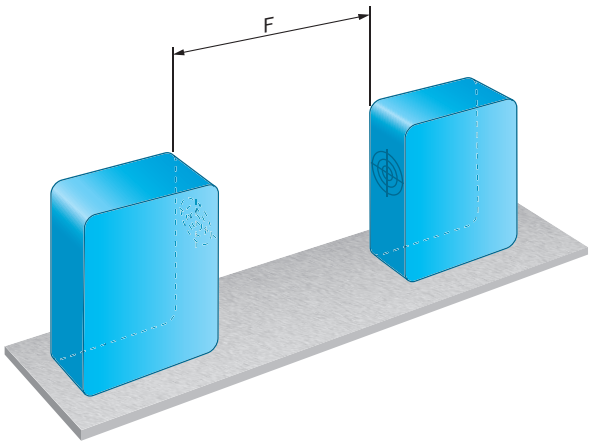


**INSTALLATION NOTE**

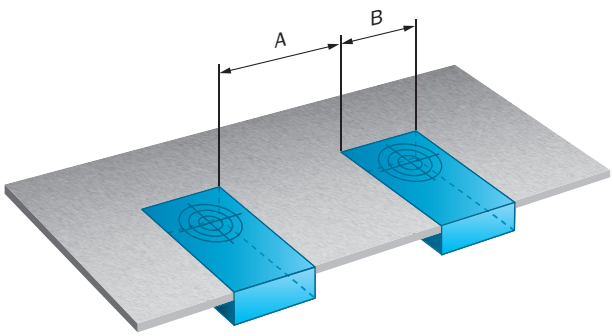


**CONNECTION DIAGRAM CD-023**

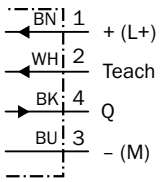

**DIMENSIONAL DRAWING SENSOR WITH BRACKET (INCLUDED IN THE SCOPE OF DELIVERY)**

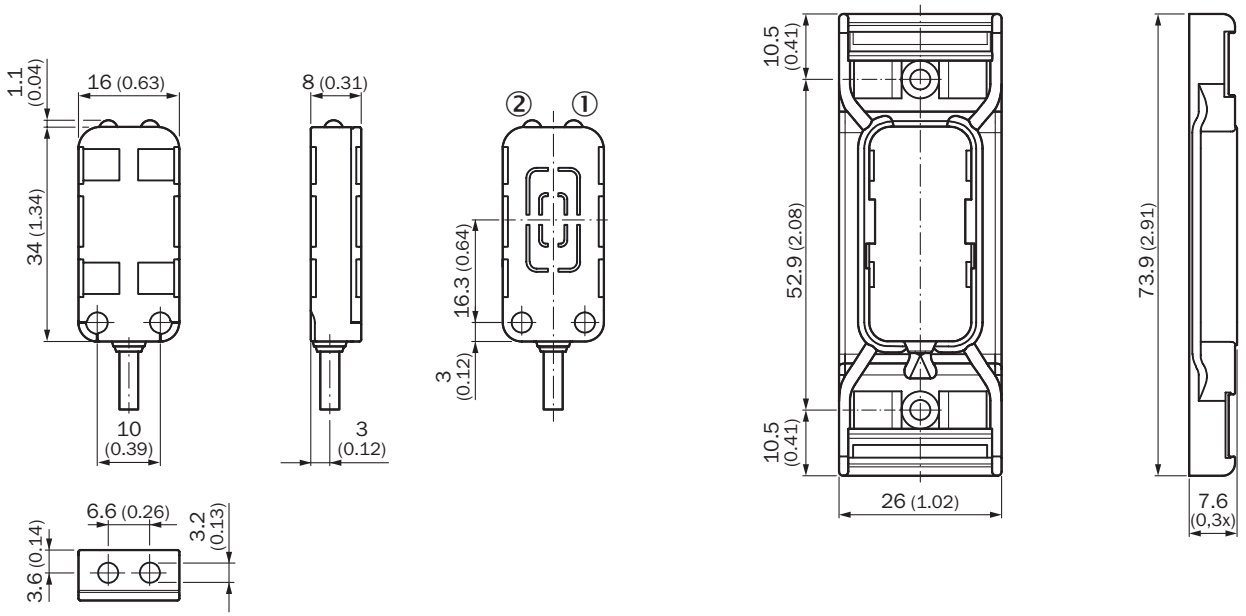


Dimensions in mm (inch)
① Yellow LED indicator: Switching output
② LED indicator green: Supply voltage active

Further information as well as suitable accessories, example applications and downloads such as CAD dimensional models, operating instructions and software can be found at www.sick.com/6068622

SICK AG
WALDKIRCH
GERMANY
SICK.COM

# SICK AT A GLANCE

SICK is a leading global technology company for intelligent sensors and integrated solutions in industrial automation. Our technologies set benchmarks, making your industrial processes more efficient, safer and more sustainable – both in logistics and manufacturing operations.

SICK combines sensor intelligence with industry expertise and certified consulting services. We provide the ideal foundation for scalable as well as tailor-made automation solutions and create added value along the entire value chain. Our close partnerships with our customers are more than just a promise: Together, we optimize productivity, improve quality, protect health and safety, and help build a sustainable future. All with empathy and trust.

Since 1946, we have been developing innovative technologies with passion and a pioneering spirit. With a global network in around 40 countries, SICK has a global presence and is always close by. The company's headquarters are located in Waldkirch near Freiburg, Germany. Our customers benefit from our understanding of both local and global requirements, which enables us to deliver tailor-made solutions

SICK
Sensor Intelligence