SICK.COM

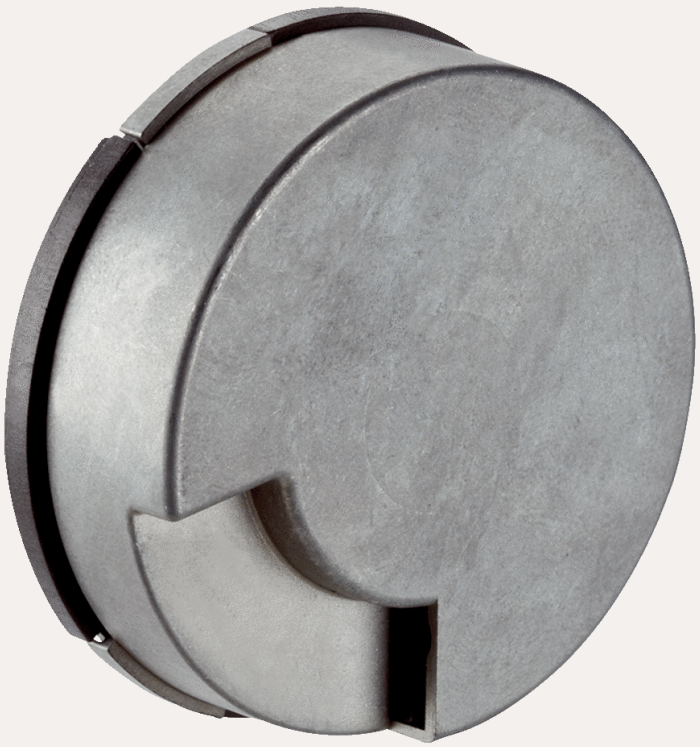

DATA SHEET

SEK52-HFA0-K02

SEK/SEL52
Motor feedback systems

SICK Sensor Intelligence



Illustration may differ

MOTOR FEEDBACK SYSTEMS

SEK52-HFA0-K02

ORDERING INFORMATION

Type	part no.
SEK52-HFA0-K02	1037368

Further device versions and accessories at www.sick.com/SEK_SEL52

DETAILED TECHNICAL DATA

PERFORMANCE

Sine/cosine periods per revolution	16
Number of the absolute ascertainable revolutions	1
Maximum number of steps per revolution	512 via RS485
Total number of steps	512
Measuring step	20 Winkelsekunden For interpolation of the sine/cosine signals with, e. g., 12 bits
Integral non-linearity	± 288 Winkelsekunden, Error limits for evaluating sine/cosine period, typical values at nominal position ± 0.1 mm und +20 °C
Differential non-linearity	± 72 Winkelsekunden, Non-linearity within a sine/cosine period, typical values at nominal position ± 0.1 mm und +20 °C
Operating speed	≤ 6,000 min^{-1}, up to which the absolute position can be reliably produced
Available memory area	1,792 Byte

INTERFACES

Type of code for the absolute value	Binary
Code sequence	Increasing, when turning the shaft For clockwise rotation, looking in direction “A” (see dimensional drawing), For clockwise shaft rotation, looking in direction “A” (see dimensional drawing)
Communication interface	HIPERFACE®

ELECTRICAL DATA

Connection type	Male connector, 8-pin, axial
Supply voltage	7 V DC ... 12 V DC
Recommended supply voltage	8 V DC
Power consumption	< 50 mA [1]

[1] Without load.

MECHANICAL DATA

Shaft version	Tapered shaft
Shaft diameter	12.7 mm
Dimensions	See dimensional drawing
Weight	≤ 0.07 kg
Moment of inertia of the rotor	7 gcm²
Operating speed	12,000 min⁻¹, 12,000 U/min
Angular acceleration	≤ 500,000 rad/s²
Permissible radial shaft movement	± 0.15 mm
Permissible axial shaft movement	± 0.5 mm
Permissible movement of the drive element, static	± 0.5 mm
Permissible movement of the drive element, dynamic	± 0.1 mm

AMBIENT DATA

Operating temperature range	–40 °C ... +115 °C
Storage temperature range	–50 °C ... +125 °C, without package
Relative humidity/condensation	90 %, Condensation not permitted
Resistance to shocks	100 g, 10 ms, 10 ms (according to EN 60068-2-27)
Frequency range of resistance to vibrations	50 g, 10 Hz ... 2,000 Hz (EN 60068-2-6)
EMC	According to EN 61000-6-2 and EN 61000-6-3 [1]
Enclosure rating	IP20, built-on version, with mating connector inserted and closed cover (IEC 60529)

[1] The EMC according to the standards quoted is achieved when the motor feedback system is mounted in an electrically conductive housing, which is connected to the central earthing point of the motor controller via a cable screen and with the cover (order number 2048234) in use. If other screening concepts are used, users must perform their own tests.

DIMENSIONAL DRAWING GENERAL TOLERANCES ACCORDING TO DIN ISO 2768-MK

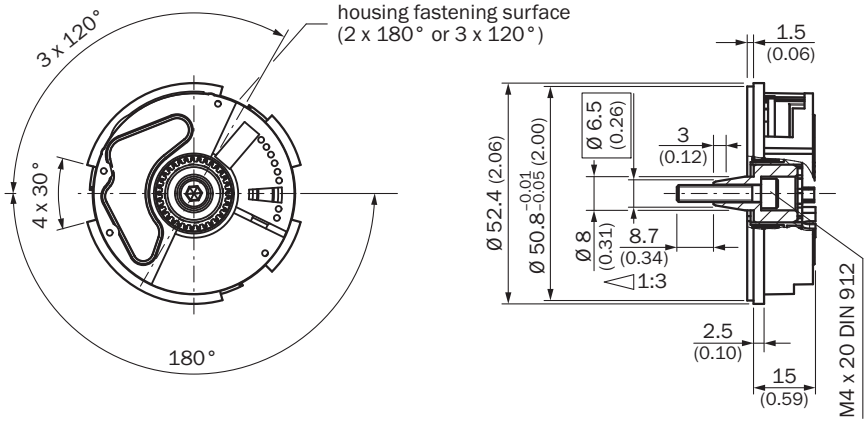

Dimensions in mm (inch)
tapered shaft

ATTACHMENT SPECIFICATIONS GENERAL TOLERANCES ACCORDING TO DIN ISO 2768-MK

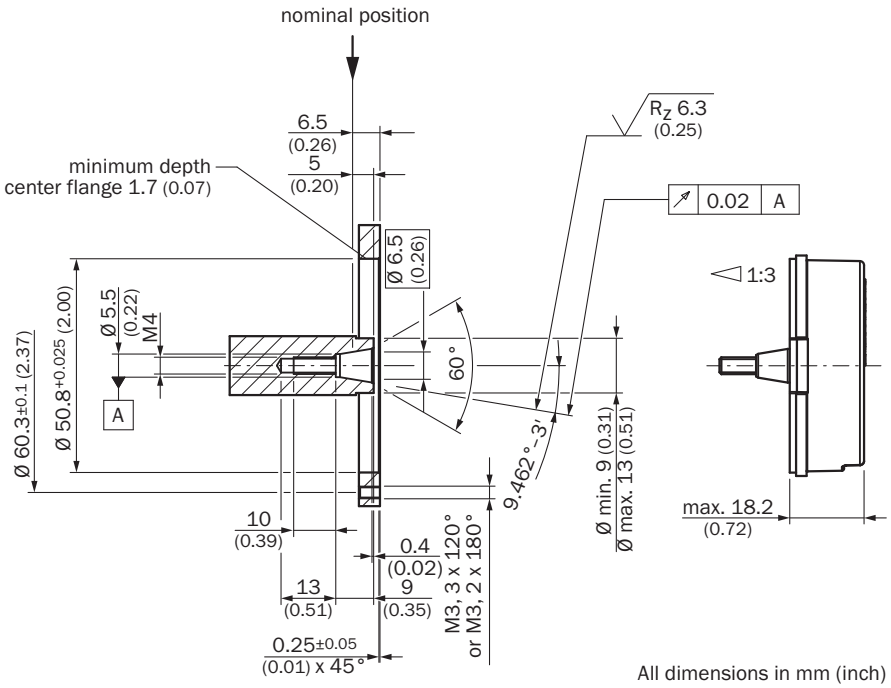

tapered shaft

PIN ASSIGNMENT VIEW OF THE PLUG-IN FACE

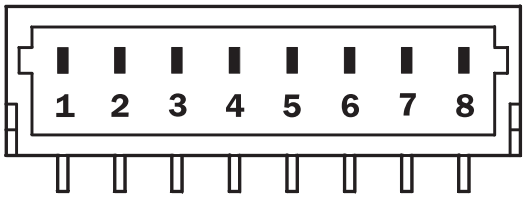

PIN	Signal	Wire colors (cable connection)	Explanation
1	U_s	Red	Supply voltage
2	+ SIN	White	Process data channel
3	REFSIN	Brown	Process data channel
4	+ COS	Pink	Process data channel
5	REFCOS	Black	Process data channel
6	GND	Blue	Ground connection
7	Data +	Gray or yellow	Parameter channel RS 485
8	Data -	Green or purple	Parameter channel RS 485
The GND connection (0 V) of the supply voltage is not connected to the housing			

DIAGRAMS SIGNAL DIAGRAM FOR CLOCKWISE SHAFT ROTATION, LOOKING IN DIRECTION “A” (SEE DIMENSIONAL DRAWING)
1 PERIOD = 360° : 16

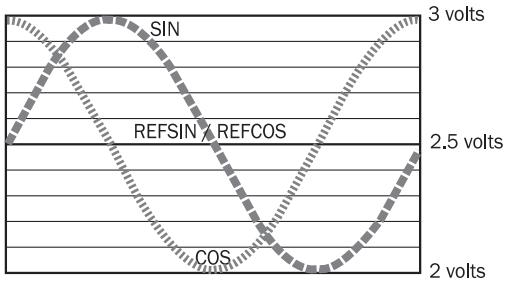

DIAGRAMS

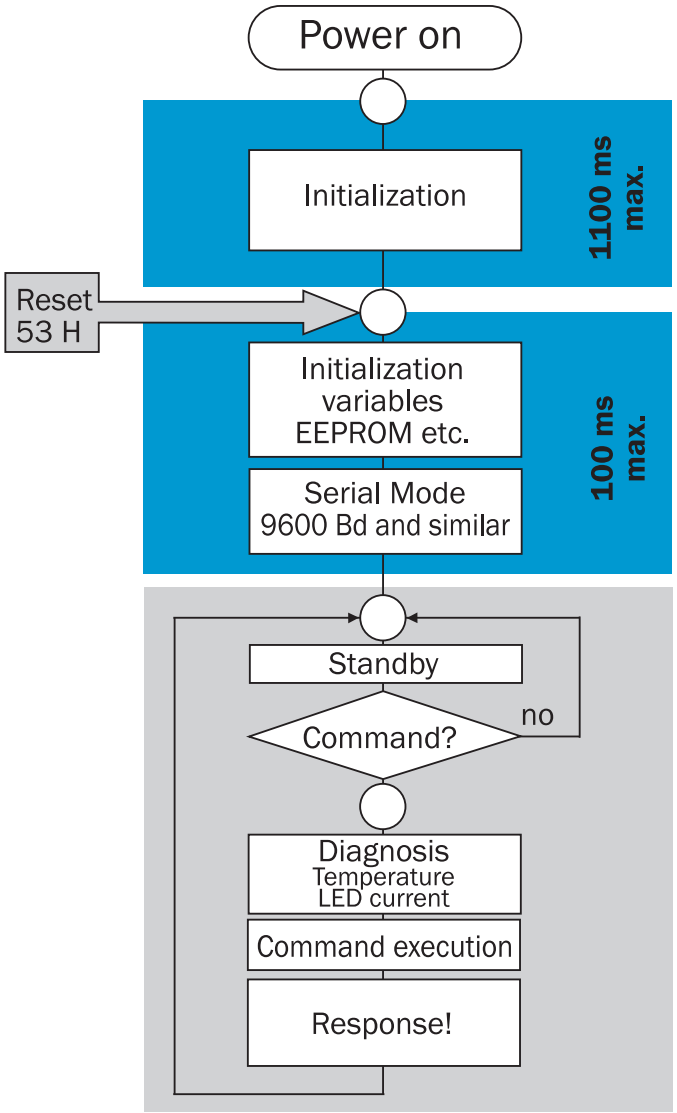

CAUTION:
No **RS485 communication** is possible during the phases highlighted in blue

Further information as well as suitable accessories, example applications and downloads such as CAD dimensional models, operating instructions and software can be found at www.sick.com/1037368

SICK AG
WALDKIRCH
GERMANY
SICK.COM

SICK AT A GLANCE

SICK is a leading global technology company for intelligent sensors and integrated solutions in industrial automation. Our technologies set benchmarks, making your industrial processes more efficient, safer and more sustainable – both in logistics and manufacturing operations.

SICK combines sensor intelligence with industry expertise and certified consulting services. We provide the ideal foundation for scalable as well as tailor-made automation solutions and create added value along the entire value chain. Our close partnerships with our customers are more than just a promise: Together, we optimize productivity, improve quality, protect health and safety, and help build a sustainable future. All with empathy and trust.

Since 1946, we have been developing innovative technologies with passion and a pioneering spirit. With a global network in around 40 countries, SICK has a global presence and is always close by. The company's headquarters are located in Waldkirch near Freiburg, Germany. Our customers benefit from our understanding of both local and global requirements, which enables us to deliver tailor-made solutions

SICK

Sensor Intelligence