SICK.COM

DATA SHEET

VL180-2P32431

V180
Photoelectric sensors

SICK Sensor Intelligence

Illustration may differ

PHOTOELECTRIC SENSORS

VL180-2P32431

ORDERING INFORMATION

Type	part no.
VL180-2P32431	6044030

Further device versions and accessories at www.sick.com/V180

DETAILED TECHNICAL DATA

FEATURES

Functional principle	Photoelectric retro-reflective sensor
Functional principle detail	With minimum distance to reflector (dual lens system)
Dimensions (W x H x D)	18 mm x 18 mm x 70.2 mm
Housing design (light emission)	Cylindrical
Housing length	70.2 mm
Thread diameter (housing)	M18 x 1
Optical axis	Axial
Sensing range max.	0.05 m ... 7 m [1]
Sensing range	0.05 m ... 6 m [1]
Focus	Approx. 4.5°
Type of light	Visible red light
Light source	LED [2]
Light spot size (distance)	Ø 400 mm (6 m)
Angle of dispersion	Approx. 4.5°
Wave length	645 nm
Adjustment	Potentiometer, 270° (Sensitivity)

[1] Reflector PL80A.

[2] Average service life: 100,000 h at T_u = +25 °C.

MECHANICS/ELECTRONICS

Supply voltage U_B	10 V DC ... 30 V DC [1]
Ripple	± 10 % [2]
Current consumption	30 mA [3]
Switching output	PNP
Switching mode	Dark switching
Signal voltage PNP HIGH/LOW	Approx. V_S – 1.8 V / 0 V
Output current $I_{max.}$	≤ 100 mA
Response time	≤ 0.5 ms [4]
Switching frequency	1,000 Hz [5]
Connection type	Male connector M12, 4-pin
Circuit protection	A [6] B [7] D [8]
Protection class	III
Weight	47 g
Polarizing filter	✓
Housing material	Metal, Nickel-plated brass and PC
Optics material	Plastic, PMMA
Enclosure rating	IP67
Items supplied	Reflector P250, fastening nuts (2 x)
Ambient operating temperature	–25 °C ... +55 °C
Ambient temperature, storage	–40 °C ... +70 °C
UL File No.	NRKH2.E300503 & NRKH8.E300503

[1] Limit values when operated in short-circuit protected network: max. 8 A.

[2] May not fall below or exceed U_v tolerances.

[3] Without load.

[4] Signal transit time with resistive load.

[5] With light/dark ratio 1:1.

[6] A = V_s connections reverse-polarity protected.

[7] B = inputs and output reverse-polarity protected.

[8] D = outputs overcurrent and short-circuit protected.

SAFETY-RELATED PARAMETERS

$MTTF_D$	2,006 years
DC_{avg}	0 %

CERTIFICATES

EU declaration of conformity	✓
UK declaration of conformity	✓
ACMA declaration of conformity	✓
Moroccan declaration of conformity	✓
China RoHS	✓
China Compulsory Product Certification (CCC) exempt	✓

cULus certificate	✓
Photobiological safety (DIN EN 62471) certificate	✓

ADJUSTMENTS

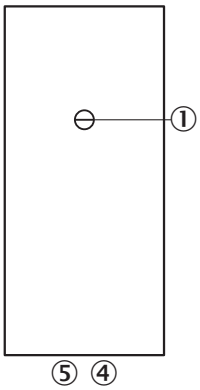

③ sensitivity control 270°
④ LED indicator orange: switching output active
⑤ LED indicator green

CONNECTION TYPE

CONNECTION DIAGRAM CD-066

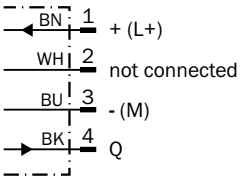

CHARACTERISTIC CURVE VL180-2, 7 M, AXIAL

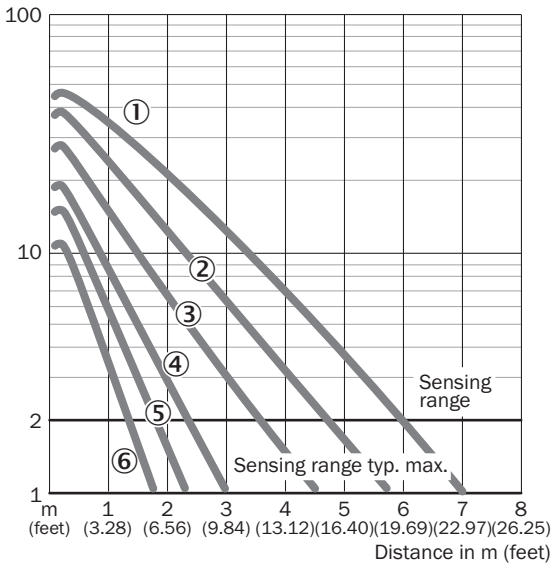

① Reflector PL80A
② Reflector P250, PL40A, PL50A, C110A
③ Reflector PL30A, PL31A
④ Reflector PL20A
⑤ P45
⑥ Reflective tape Diamond Grade

LIGHT SPOT SIZE VL180-2

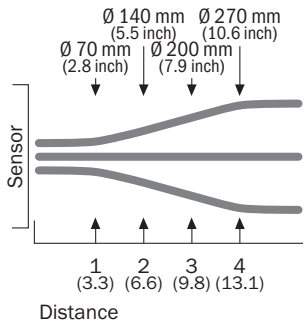

SENSING RANGE DIAGRAM VL180-2, 7 M, AXIAL

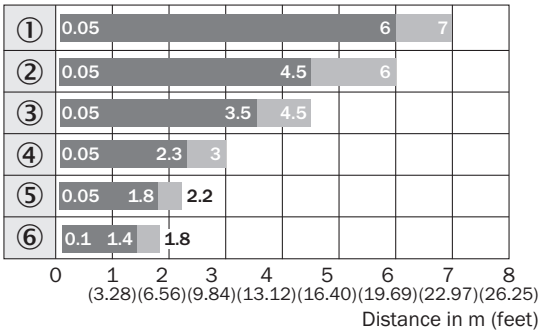

Sensing range Sensing range max.

① Reflector PL80A
② Reflector P250, PL40A, PL50A, C110A
③ Reflector PL30A, PL31A
④ Reflector PL20A
⑤ P45
⑥ Reflective tape Diamond Grade

DIMENSIONAL DRAWING VL180-2, METAL, AXIAL

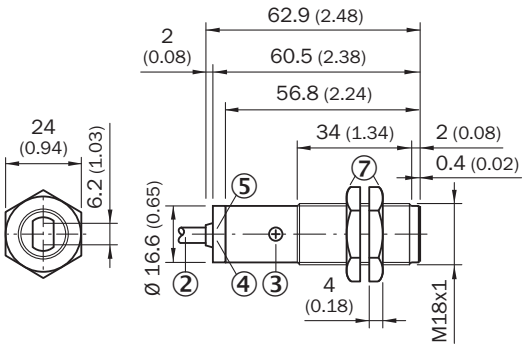

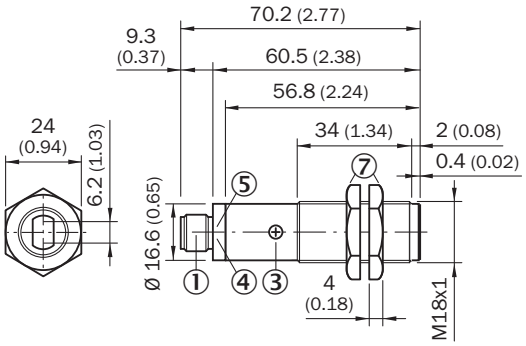

Dimensions in mm (inch)
① M12 male device connector, 4-pin
② Connection cable 2 m
③ sensitivity control 270°
④ LED indicator orange: switching output active
⑤ LED indicator green: strength indicator
⑦ Fastening nuts (2x); width across 24, metal

Further information as well as suitable accessories, example applications and downloads such as CAD dimensional models, operating instructions and software can be found at www.sick.com/6044030

SICK AG
WALDKIRCH
GERMANY
SICK.COM

SICK AT A GLANCE

SICK is a leading global technology company for intelligent sensors and integrated solutions in industrial automation. Our technologies set benchmarks, making your industrial processes more efficient, safer and more sustainable – both in logistics and manufacturing operations.

SICK combines sensor intelligence with industry expertise and certified consulting services. We provide the ideal foundation for scalable as well as tailor-made automation solutions and create added value along the entire value chain. Our close partnerships with our customers are more than just a promise: Together, we optimize productivity, improve quality, protect health and safety, and help build a sustainable future. All with empathy and trust.

Since 1946, we have been developing innovative technologies with passion and a pioneering spirit. With a global network in around 40 countries, SICK has a global presence and is always close by. The company's headquarters are located in Waldkirch near Freiburg, Germany. Our customers benefit from our understanding of both local and global requirements, which enables us to deliver tailor-made solutions

SICK
Sensor Intelligence