SICK.COM

DATA SHEET

WLL170T-P330

Photoelectric sensors

SICK Sensor Intelligence

Illustration may differ

PHOTOELECTRIC SENSORS

WLL170T-P330

ORDERING INFORMATION

Type	part no.
WLL170T-P330	6021963

Further device versions and accessories at www.sick.com/

DETAILED TECHNICAL DATA

FEATURES

Dimensions (W x H x D)	9 mm x 38.5 m x 60 mm
Housing design (light emission)	Rectangular
Sensing range max.	0 mm ... 580 mm [1]
Sensing range	0 mm ... 100 mm [1]
Type of light	Visible red light
Light source	LED

[1] Object with 90% remission (based on standard white, DIN 5033).

MECHANICS/ELECTRONICS

Supply voltage	10 V DC ... 30 V DC
Current consumption	50 mA [1]
Switching output	PNP
Switching mode	Light/dark switching
Response time	≤ 0.5 ms [2]
Connection type	Connector M8, 3-pin
Housing material	Plastic, ABS
Optics material	Plastic, PMMA
Enclosure rating	IP50
Ambient operating temperature	–25 °C ... +55 °C
Ambient temperature, storage	–40 °C ... +70 °C
UL File No.	NRNT2.E128350 & NRNT8.E128350

[1] Without load.

[2] Signal transit time with resistive load.

CONNECTION TYPE

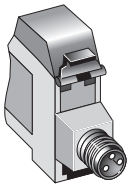

CONNECTION DIAGRAM

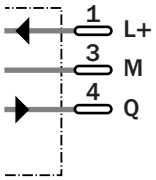

ADJUSTMENTS

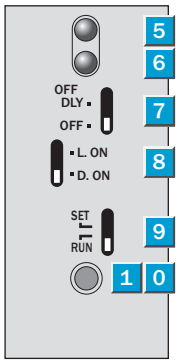

⑤ LED indicator orange, lights up when switching output is active
⑥ LED signal strength indicator green, lights up, when light received< 0.9 or >1.1 (switching threshold = 1)
⑦ OFF delay selector switch: “OFF DLY” (on)/“OFF” (off), 40 ms fixed
⑧ Selector switch: "L.ON" (light switching) /"D.ON" (dark switching)
⑨ Operating mode selector switch:"SET" (Teach-in mode) /"RUN" (sensor mode)
⑩ Teach-in button

DIMENSIONAL DRAWING

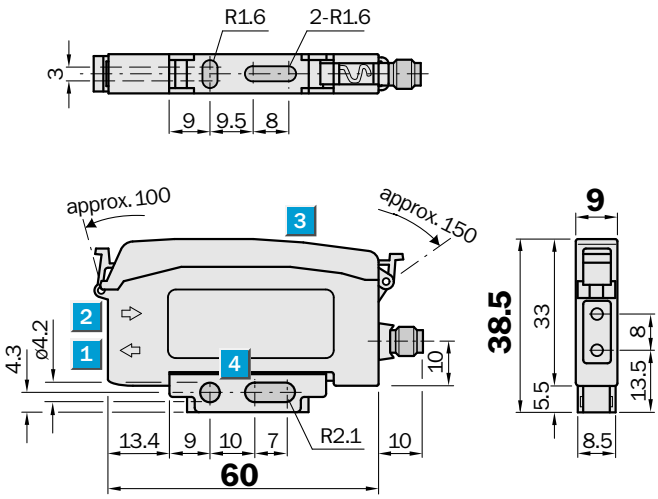

Dimensions in mm (inch)
① Sender LED, installation of LL3 fibre-optic cable (sender fibre)
② Receiver, installation of LL3 fibre optic cable (receiver fibre)
③ Protective hood: can be raised at both ends, removable
④ Mounting bracket, included with delivery

Further information as well as suitable accessories, example applications and downloads such as CAD dimensional models, operating instructions and software can be found at www.sick.com/6021963

SICK AG
WALDKIRCH
GERMANY
SICK.COM

SICK AT A GLANCE

SICK is a leading global technology company for intelligent sensors and integrated solutions in industrial automation. Our technologies set benchmarks, making your industrial processes more efficient, safer and more sustainable – both in logistics and manufacturing operations.

SICK combines sensor intelligence with industry expertise and certified consulting services. We provide the ideal foundation for scalable as well as tailor-made automation solutions and create added value along the entire value chain. Our close partnerships with our customers are more than just a promise: Together, we optimize productivity, improve quality, protect health and safety, and help build a sustainable future. All with empathy and trust.

Since 1946, we have been developing innovative technologies with passion and a pioneering spirit. With a global network in around 40 countries, SICK has a global presence and is always close by. The company's headquarters are located in Waldkirch near Freiburg, Germany. Our customers benefit from our understanding of both local and global requirements, which enables us to deliver tailor-made solutions

SICK
Sensor Intelligence