SICK.COM

DATA SHEET

FFUS10-1G1IO

FFU
Flow sensors

SICK Sensor Intelligence

Illustration may differ

FLOW SENSORS

FFUS10-1G1IO

ORDERING INFORMATION

Type	part no.
FFUS10-1G1IO	6041737

Further device versions and accessories at www.sick.com/FFU

DETAILED TECHNICAL DATA

FEATURES

Measurement principle	Ultrasonic sensor
Medium	Fluids
Nominal width measuring tube	DN 10
Process temperature	0 °C ... +80 °C
Process pressure	≤ 16 bar
Communication interface	-

PERFORMANCE

Minimum flow	≥ 0.3 l/min [1]
Maximum flow	≤ 21 l/min
Inlet zone	10 cm
Output zone	0 cm
Conductivity	No limitation
Measurement accuracy	± 2 % of measured value + 0.15% of measuring range limit value [2]
Repeatability	≤ 0.5 %
Resolution	0.003 l/min
Response time	100 ms [3] 300 ms [3] 1 s [3] 4.2 s [3]

[1] At constant flow rate.

[2] Reference condition: Water, zero gas, measuring tube completely full, no cavitation, temperature of medium 20 °C, ambient temperature 20 °C ... 25 °C, compliance with inlet and outlet zones, warm-up time for electronics: 30 min.

[3] Analog output and display.

ELECTRONICS

Supply voltage	18 V DC ... 30 V DC [1]
Residual ripple	≤ 5 V_{pp} [2]
Power consumption	≤ 180 mA [3]
Switch-on time	≤ 5 s
Protection class	✓
Connection type	Round connector M12 x 1, 5-pin
Output signal	Analog output 4 mA ... 20 mA, 0 mA ... 20 mA current flow and temperature [1] 1 pulse/status output PNP/NPN-transistor output for flow rate meter, empty pipe detection, flow monitoring, dosing output, flow direction (dependent on type)
Output current	< 100 mA [4]
Output load	< 500 Ohm
Lower signal level	3.8 mA ... 4 mA
Upper signal level	20 mA ... 20.5 mA
Impuls/frequency output	0 kHz ... 10 kHz
Puls width	≤ 1 s
Inductive load	1 H
Capacitive load	100 nF
Enclosure rating	IP67

[1] All connections are polarity protected. All outputs are overload and short-circuit protected.

[2] May not fall below or exceed U_v tolerances.

[3] Without load.

[4] There are 100 mA for each output PNP and NPN available.

MECHANICS

Process connection	G ½
Wetted parts	PPSU EPDM
Housing material	PPSU
Weight	340 g

AMBIENT DATA

Ambient operating temperature	0 °C ... +60 °C
Ambient temperature, storage	–20 °C ... +70 °C

CERTIFICATES

EU declaration of conformity	✓
UK declaration of conformity	✓
ACMA declaration of conformity	✓
China RoHS	✓
China Compulsory Product Certification (CCC) exempt	✓

DIMENSIONAL DRAWING DN 10, G <B>½</B>

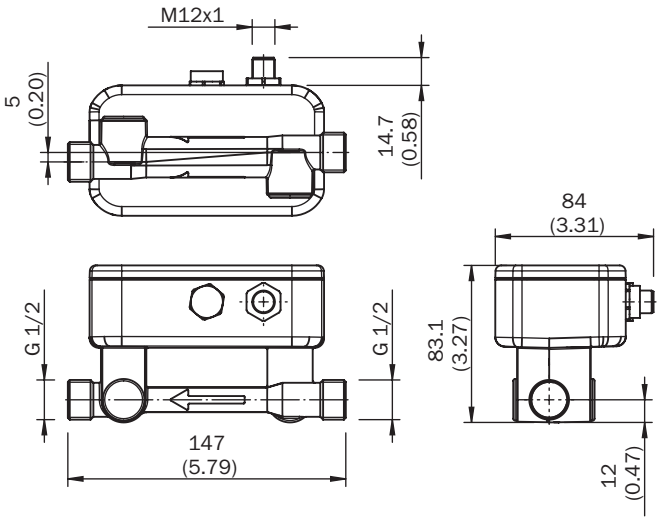

Dimensions in mm (inch)

CONNECTION TYPE

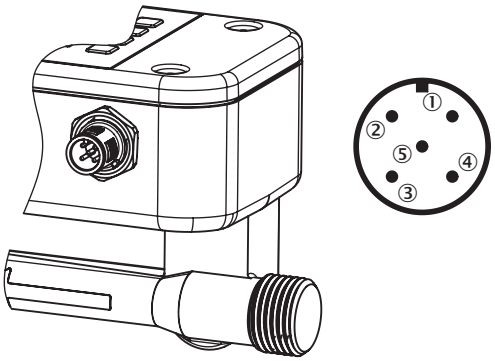

① L^+: Supply voltage
② Q_1: Digital output PNP/NPN
③ M: Ground
④ C: Communication
⑤ Q_A: Analog current output

Further information as well as suitable accessories, example applications and downloads such as CAD dimensional models, operating instructions and software can be found at www.sick.com/6041737

SICK AG
WALDKIRCH
GERMANY
SICK.COM

SICK AT A GLANCE

SICK is a leading global technology company for intelligent sensors and integrated solutions in industrial automation. Our technologies set benchmarks, making your industrial processes more efficient, safer and more sustainable – both in logistics and manufacturing operations.

SICK combines sensor intelligence with industry expertise and certified consulting services. We provide the ideal foundation for scalable as well as tailor-made automation solutions and create added value along the entire value chain. Our close partnerships with our customers are more than just a promise: Together, we optimize productivity, improve quality, protect health and safety, and help build a sustainable future. All with empathy and trust.

Since 1946, we have been developing innovative technologies with passion and a pioneering spirit. With a global network in around 40 countries, SICK has a global presence and is always close by. The company's headquarters are located in Waldkirch near Freiburg, Germany. Our customers benefit from our understanding of both local and global requirements, which enables us to deliver tailor-made solutions

SICK
Sensor Intelligence