SICK.COM

DATA SHEET

PBS2-RB400SG1SSDNMA0Z

PBS plus
Pressure sensors

SICK Sensor Intelligence

Illustration may differ

PRESSURE SENSORS

PBS2-RB400SG1SSDNMA0Z

ORDERING INFORMATION

Type	part no.
PBS2-RB400SG1SSDNMA0Z	6073959

Further device versions and accessories at www.sick.com/PBS_plus

DETAILED TECHNICAL DATA

FEATURES

Medium	Liquid, gaseous
Pressure type	Gauge pressure
Pressure unit	bar psi
Measuring range	0 bar ... 400 bar 0 psi ... 5,802 psi
Process temperature	–20 °C ... +85 °C
Maximum ohmic load R_A	4 mA ... 20 mA (R_A ≤ 0.5 kOhm), 0 V ... 10 V, 3-wire (R_A > 10 kOhm)
Zero point adjustment	Max. + 3 % of span
Output signal	IO-Link/PNP/NPN + 4 mA ... 20 mA / 0 V ... 10 V
Rotatable housing	Display against housing with electrical connection: 330 ° Housing against process connection: 320 °
Display	14-Segment LED, red, 4-digit, character height 9 mm, can be rotated electronically by 180° Update: 1,000, 500, 200, 100 ms (adjustable)

MECHANICS/ELECTRONICS

Communication interface	IO-Link
Communication Interface detail	IO-Link V1.1
Process connection	G ¼ A (ISO 1179-2)
Wetted parts	Process connection: 316L stainless steel Measuring chamber: stainless steel 316L
Internal transmission fluid	Silicone oil (only with pressure ranges < 0 bar ... 10 bar and ≤ 0 bar abs ... 25 bar abs)
Pressure port	Standard
Housing material	Lower body: stainless steel 304, Plastic head: PC + ABS, Buttons: TPE-E, Display window: PC

[1] NBR seal installed, FPM/FKM seal included.

[2] Enclosure rating IP per IEC 60529. The enclosure rating classes specified only apply when connected with female connectors that provide the corresponding enclosure rating.

[3] Available on request for process connections G ¼ A according to DIN 3852-E, ¼" NPT.

Connection type	M12 round connector x 1, 4-pin
Supply voltage	15 V DC ... 35 V DC
Power consumption	45 mA (for configurations without analog output signal) 70 mA (for configurations with analog output signal)
Total current consumption	Max. 600 mA (including switching current)
Electrical safety	Protection class: III Overvoltage protection: 40 V DC Short-circuit protection: Q_A, Q_1, Q_2 towards M Reverse polarity protection: L^+ to M
Isolation voltage	500 V DC
CE-conformity	EMC Directive: 2014/30 / EU (EN 61326-1:2013; EN 61326-2-3:2013)
Ex-approvals	Pressure equipment directive: 2014/68 / EU, Hazardous materials (RoHS): 2011/65 / EU (EN 50581:2012)
Weight sensor	Approx. 220 g
Seal	NBR [1]
Enclosure rating	IP67 [2]
Protection class III	✓
MTTF	104 years
Pressure peak dampening	Through integrated pressure port 0.6 mm or 0.3 mm for process connection G ¼ according to DIN 3852-E (0.3 mm at and above 10 bar) [3]

[1] NBR seal installed, FPM/FKM seal included.

[2] Enclosure rating IP per IEC 60529. The enclosure rating classes specified only apply when connected with female connectors that provide the corresponding enclosure rating.

[3] Available on request for process connections G ¼ A according to DIN 3852-E, ¼" NPT.

PERFORMANCE

Non-linearity	≤ ± 0.25 %, of span (Best Fit Straight Line, BFSL) according to IEC 61298-2
Accuracy	≤ ± 0.5 %, of the span (including non-linearity, hysteresis, zero point and full scale error (corresponds to error of measurement as per IEC 61298-2))
Setting accuracy of switching outputs	≤ ± 0.5 % of span
Response time	≤ 5 ms
Long-term drift/one-year stability	≤ ± 0.1 % of span to IEC 61298-2 ≤ 0.2 % of the span according to IEC 61298-2 for measuring range ≤ 0.6 bar or flush-mounted membrane (0 psi ... 10 psi)
Temperature coefficient in rated temperature range	Average TC of the zero point: ≤± 0.16% of the span / 10 K Average TC of the span ≤± 0.16% of the span / 10 K
Rated temperature range	0 °C ... +80 °C
Service life	Minimum 100 Mio. load cycles
Temperature error	≤ ± 1.0% of the range, typ., ≤ ± 2.5% of the range max.

AMBIENT DATA

Ambient temperature, operation	–20 °C ... +80 °C
Storage temperature	–20 °C ... +70 °C
Relative humidity	≤ 75 %
Shock load	50 g, 6 ms according to IEC 60068-2-27 (mechanical shock)
Vibration load	20 g, 10 Hz ... 2,000 Hz (IEC 60068-2-6, at resonance)

CERTIFICATES

EU declaration of conformity	✓
UK declaration of conformity	✓
China RoHS	✓

China Compulsory Product Certification (CCC) exempt	✓
cULus certificate	✓
IO-Link certificate	✓
Information according to Art. 3 of Data Act (Regulation EU 2023/2854)	✓

DIMENSIONAL DRAWING G ¼ A DIN 3852-E

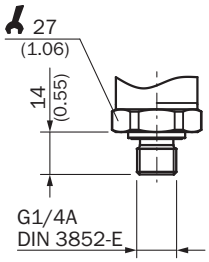

Dimensions in mm (inch)

DIMENSIONAL DRAWING

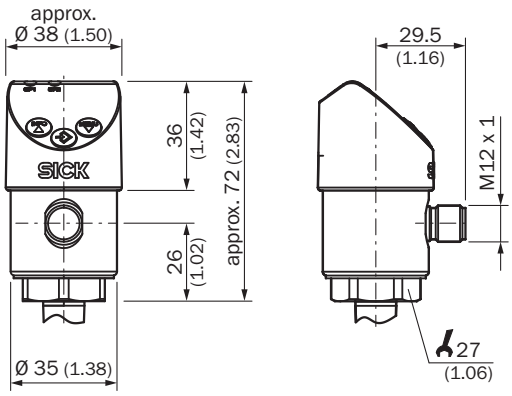

Dimensions in mm (inch)

CONNECTION TYPE

M12 x 1, 4-pin — 2 switching outputs/ 1 switching output + 1 analog output

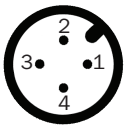

$L^+ = 1$, $M = 3$, $Q_1 = 4$, $Q_2 = 2$
$C/Q_1 = 4$, $Q_A = 2$

M12 x 1, 5-pin — 2 switching outputs + 1 analog output

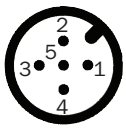

$L^+ = 1$, $M = 3$, $Q_1 = 4$, $Q_2 = 2$, $Q_A = 5$
$C/Q_1 = 4$

Further information as well as suitable accessories, example applications and downloads such as CAD dimensional models, operating instructions and software can be found at www.sick.com/6073959

SICK AG
WALDKIRCH
GERMANY
SICK.COM

SICK AT A GLANCE

SICK is a leading global technology company for intelligent sensors and integrated solutions in industrial automation. Our technologies set benchmarks, making your industrial processes more efficient, safer and more sustainable – both in logistics and manufacturing operations.

SICK combines sensor intelligence with industry expertise and certified consulting services. We provide the ideal foundation for scalable as well as tailor-made automation solutions and create added value along the entire value chain. Our close partnerships with our customers are more than just a promise: Together, we optimize productivity, improve quality, protect health and safety, and help build a sustainable future. All with empathy and trust.

Since 1946, we have been developing innovative technologies with passion and a pioneering spirit. With a global network in around 40 countries, SICK has a global presence and is always close by. The company's headquarters are located in Waldkirch near Freiburg, Germany. Our customers benefit from our understanding of both local and global requirements, which enables us to deliver tailor-made solutions

SICK
Sensor Intelligence