SICK.COM

DATA SHEET

IMX30-25BNOZC0S

IMX
Inductive proximity sensors

SICK Sensor Intelligence

Illustration may differ

INDUCTIVE PROXIMITY SENSORS

IMX30-25BNOZC0S

ORDERING INFORMATION

Type	part no.
IMX30-25BNOZC0S	1134197

Further device versions and accessories at www.sick.com/IMX

DETAILED TECHNICAL DATA

FEATURES

Housing	Metric
Housing	Standard design
Thread size	M30 x 1.5
Diameter	Ø 30 mm
Sensing range S_n	25 mm
Safe sensing range S_a	20.25 mm
Installation type	Quasi-flush
Switching frequency	25 Hz
Connection type	Male connector M12, 4-pin
Switching output	NPN
Switching output detail	NPN
Output function	NC
Electrical wiring	DC 3-wire
Enclosure rating	IP68 [1]
Special features	Quadruple sensing range, Resistant against coolant lubricants, Visual adjustment indicator
Special applications	Zones with coolants and lubricants
Items supplied	Mounting nut, brass, nickel-plated (2x)

[1] According to EN 60529.

MECHANICS/ELECTRONICS

Supply voltage	10 V DC ... 30 V DC
Ripple	≤ 10 %

[1] At I_a max.

[2] Supply voltage U_B and constant ambient temperature Ta.

[3] Of Sr.

Voltage drop	≤ 2 V [1]
Time delay before availability	≤ 150 ms
Hysteresis	5 % ... 15 %
Reproducibility	≤ 7 % [2] [3]
Temperature drift (of S_r)	± 10 %
EMC	According to EN 60947-5-2
Continuous current I_a	≤ 200 mA
No load current	≤ 50 mA
Short-circuit protection	✓
Power-up pulse protection	✓
Shock and vibration resistance	30 g, 11 ms / 10 ... 55 Hz, 1 mm
Display	
LED yellow	Output state (on/off)
LED green	Stable on/off state
Ambient operating temperature	–25 °C ... +75 °C
Housing material	Nickel-plated brass
Sensing face material	Plastic, LCP
Housing length	70.2 mm
Thread length	52.2 mm
Tightening torque, max.	≤ 70 Nm
Protection class	III
UL File No.	E181493
Service interface	IO-Link as a service interface. The interface can only be used by SICK Service.

[1] At I_a max.

[2] Supply voltage U_B and constant ambient temperature Ta.

[3] Of Sr.

SAFETY-RELATED PARAMETERS

$MTTF_D$	411 years
DC_{avg}	0 %
T_M (mission time)	20 years

REDUCTION FACTORS

Note	The values are reference values which may vary
St37 steel (Fe)	1
Stainless steel (V2A, 304)	1
Aluminum (Al)	0.3
Copper (Cu)	0.2
Brass (Br)	0.4

INSTALLATION NOTE

Remark	Associated graphic see "Installation"
A	35 mm
B	30 mm
C	30 mm
D	75 mm
E	10 mm

F	75 mm

CERTIFICATES

EU declaration of conformity	✓
UK declaration of conformity	✓
ACMA declaration of conformity	✓
Moroccan declaration of conformity	✓
China RoHS	✓
China Compulsory Product Certification (CCC) exempt	✓
cULus certificate	✓
Information according to Art. 3 of Data Act (Regulation EU 2023/2854)	✓

INSTALLATION NOTE QUASI-FLUSH INSTALLATION

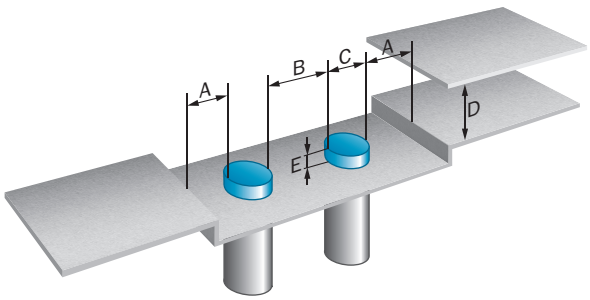

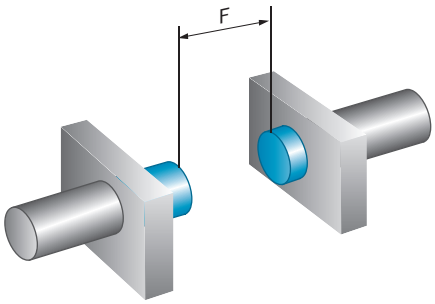

CONNECTION DIAGRAM CD-008

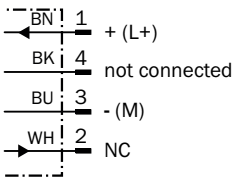

RESPONSE DIAGRAM

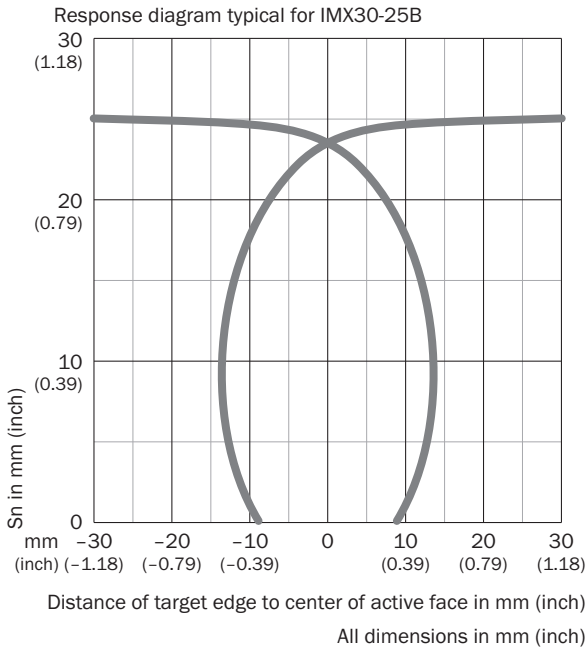

FUNCTIONAL PRINCIPLE INSTALLATION AID

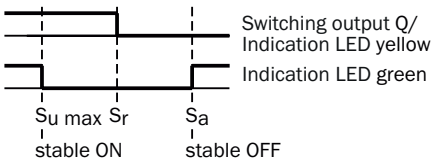

LED indicator green	LED indicator yellow	Status
ON	ON	Output is activated (ON), sensor in stable ON state
OFF	ON	Output is activated (ON), no object detected
OFF	OFF	Output is deactivated (OFF), object detected
ON	OFF	Output is deactivated (OFF), sensor in stable OFF state

DIMENSIONAL DRAWING IMX30, STANDARD VARIANT, PLUG, QUASI-FLUSH

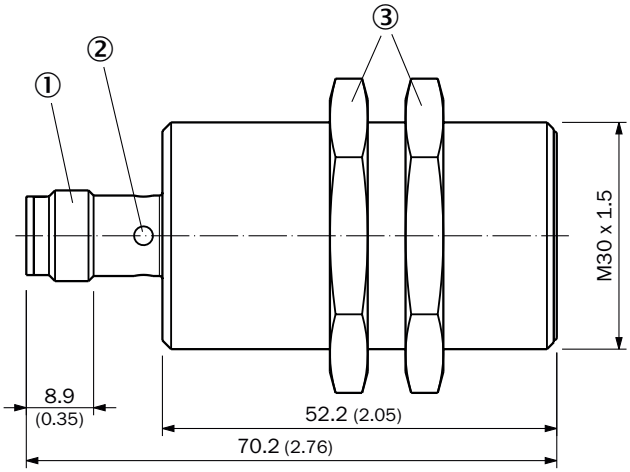

Dimensions in mm (inch)
① Connection
② Display LED
③ fastening nuts (2x); width across 36, brass nickel-plated

Further information as well as suitable accessories, example applications and downloads such as CAD dimensional models, operating instructions and software can be found at www.sick.com/1134197

SICK AG
WALDKIRCH
GERMANY
SICK.COM

SICK AT A GLANCE

SICK is a leading global technology company for intelligent sensors and integrated solutions in industrial automation. Our technologies set benchmarks, making your industrial processes more efficient, safer and more sustainable – both in logistics and manufacturing operations.

SICK combines sensor intelligence with industry expertise and certified consulting services. We provide the ideal foundation for scalable as well as tailor-made automation solutions and create added value along the entire value chain. Our close partnerships with our customers are more than just a promise: Together, we optimize productivity, improve quality, protect health and safety, and help build a sustainable future. All with empathy and trust.

Since 1946, we have been developing innovative technologies with passion and a pioneering spirit. With a global network in around 40 countries, SICK has a global presence and is always close by. The company's headquarters are located in Waldkirch near Freiburg, Germany. Our customers benefit from our understanding of both local and global requirements, which enables us to deliver tailor-made solutions

SICK
Sensor Intelligence