SICK.COM

DATA SHEET

# IMX18-30NPOZC0S

IMX
Inductive proximity sensors

SICK Sensor Intelligence

Illustration may differ

## INDUCTIVE PROXIMITY SENSORS

# IMX18-30NPOZC0S

### ORDERING INFORMATION

| Type | part no. |
|---|---|
| IMX18-30NPOZC0S | 1119663 |

Further device versions and accessories at www.sick.com/IMX

## DETAILED TECHNICAL DATA

### FEATURES

| | |
|---|---|
| Housing | Metric |
| Housing | Standard design |
| Thread size | M18 x 1 |
| Diameter | Ø 18 mm |
| Sensing range $S_n$ | 30 mm |
| Safe sensing range $S_a$ | 24.3 mm |
| Installation type | Non-flush |
| Switching frequency | 10 Hz |
| Connection type | Male connector M12, 4-pin |
| Switching output | PNP |
| Switching output detail | PNP |
| Output function | NC |
| Electrical wiring | DC 3-wire |
| Enclosure rating | IP68 [1] |
| Special features | Quadruple sensing range, Resistant against coolant lubricants, Visual adjustment indicator |
| Special applications | Zones with coolants and lubricants |
| Items supplied | Mounting nut, brass, nickel-plated (2x) |

[1] According to EN 60529.

### MECHANICS/ELECTRONICS

| | |
|---|---|
| Supply voltage | 10 V DC ... 30 V DC |
| Ripple | ≤ 10 % |

[1] At $I_a$ max.

[2] Supply voltage $U_B$ and constant ambient temperature Ta.

[3] Of Sr.

| | |
|---|---|
| Voltage drop | ≤ 2 V [1] |
| Time delay before availability | ≤ 150 ms |
| Hysteresis | 5 % ... 15 % |
| Reproducibility | ≤ 7 % [2] [3] |
| Temperature drift (of $S_r$) | ± 10 % |
| EMC | According to EN 60947-5-2 |
| Continuous current $I_a$ | ≤ 200 mA |
| No load current | ≤ 50 mA |
| Short-circuit protection | ✓ |
| Power-up pulse protection | ✓ |
| Shock and vibration resistance | 30 g, 11 ms / 10 ... 55 Hz, 1 mm |
| Display | |
| LED yellow | Output state (on/off) |
| LED green | Stable on/off state |
| Ambient operating temperature | –25 °C ... +75 °C |
| Housing material | Nickel-plated brass |
| Sensing face material | Plastic, LCP |
| Housing length | 69 mm |
| Thread length | 43 mm |
| Tightening torque, max. | ≤ 30 Nm |
| Protection class | III |
| UL File No. | E181493 |
| Service interface | IO-Link as a service interface. The interface can only be used by SICK Service. |

[1] At $I_a$ max.

[2] Supply voltage $U_B$ and constant ambient temperature Ta.

[3] Of Sr.

## SAFETY-RELATED PARAMETERS

| | |
|---|---|
| $MTTF_D$ | 411 years |
| $DC_{avg}$ | 0 % |
| $T_M$ (mission time) | 20 years |

## REDUCTION FACTORS

| | |
|---|---|
| Note | The values are reference values which may vary |
| St37 steel (Fe) | 1 |
| Stainless steel (V2A, 304) | 1 |
| Aluminum (Al) | 0.6 |
| Copper (Cu) | 0.4 |
| Brass (Br) | 0.7 |

## INSTALLATION NOTE

| | |
|---|---|
| Remark | Associated graphic see "Installation" |
| A | 56 mm |
| B | 36 mm |
| C | 18 mm |
| D | 90 mm |
| E | 35 mm |

| | |
|---|---|
| F | 90 mm |

## CERTIFICATES

| | |
|---|---|
| EU declaration of conformity | ✓ |
| UK declaration of conformity | ✓ |
| ACMA declaration of conformity | ✓ |
| Moroccan declaration of conformity | ✓ |
| China RoHS | ✓ |
| China Compulsory Product Certification (CCC) exempt | ✓ |
| cULus certificate | ✓ |
| Information according to Art. 3 of Data Act (Regulation EU 2023/2854) | ✓ |

## INSTALLATION NOTE NON-FLUSH INSTALLATION

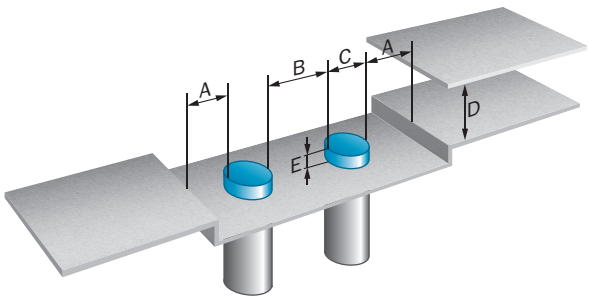


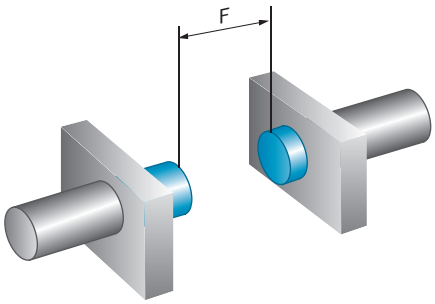


## CONNECTION DIAGRAM CD-008

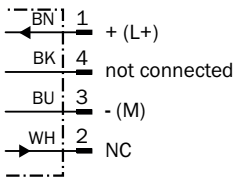

## RESPONSE DIAGRAM

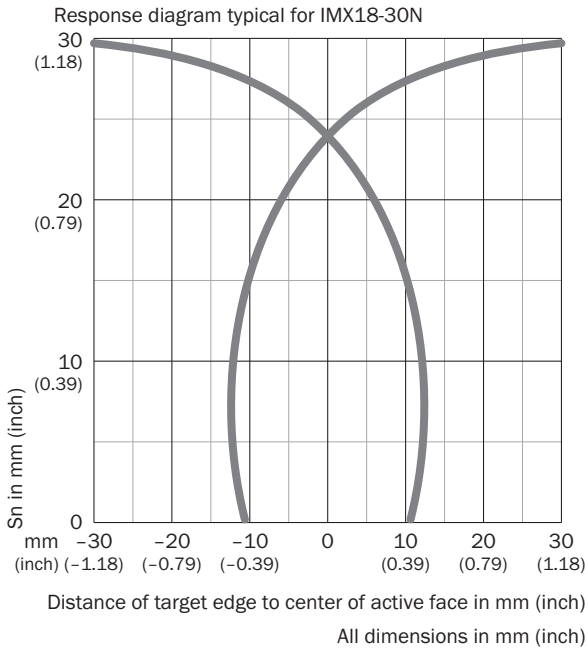


## FUNCTIONAL PRINCIPLE INSTALLATION AID

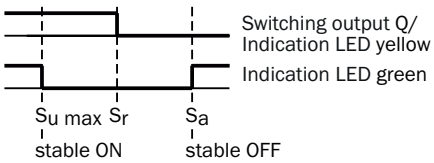


| LED indicator green | LED indicator yellow | Status |
|---|---|---|
| ON | ON | Output is activated (ON), sensor in stable ON state |
| OFF | ON | Output is activated (ON), no object detected |
| OFF | OFF | Output is deactivated (OFF), object detected |
| ON | OFF | Output is deactivated (OFF), sensor in stable OFF state |

**DIMENSIONAL DRAWING IMX18, STANDARD VARIANT, PLUG, NON-FLUSH**

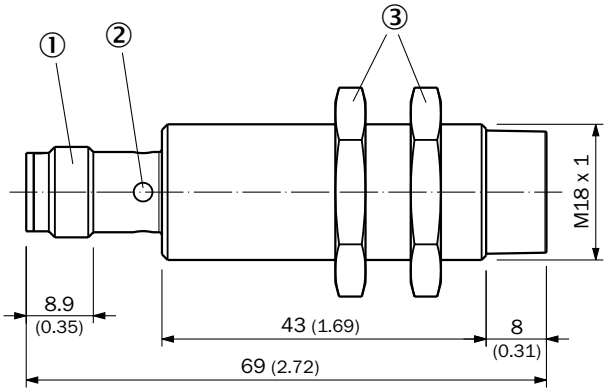


Dimensions in mm (inch)
① Connection
② Display LED
③ fastening nuts (2x); width across 24, brass nickel-plated

Further information as well as suitable accessories, example applications and downloads such as CAD dimensional models, operating instructions and software can be found at www.sick.com/1119663

SICK AG
WALDKIRCH
GERMANY
SICK.COM

# SICK AT A GLANCE

SICK is a leading global technology company for intelligent sensors and integrated solutions in industrial automation. Our technologies set benchmarks, making your industrial processes more efficient, safer and more sustainable – both in logistics and manufacturing operations.

SICK combines sensor intelligence with industry expertise and certified consulting services. We provide the ideal foundation for scalable as well as tailor-made automation solutions and create added value along the entire value chain. Our close partnerships with our customers are more than just a promise: Together, we optimize productivity, improve quality, protect health and safety, and help build a sustainable future. All with empathy and trust.

Since 1946, we have been developing innovative technologies with passion and a pioneering spirit. With a global network in around 40 countries, SICK has a global presence and is always close by. The company's headquarters are located in Waldkirch near Freiburg, Germany. Our customers benefit from our understanding of both local and global requirements, which enables us to deliver tailor-made solutions

SICK
Sensor Intelligence