OPERATING INSTRUCTIONS

MRS1000 PeopleCounter

3D LiDAR sensor

SICK
Sensor Intelligence.



Described product

MRS1000 PeopleCounter (type code: MRS1104A-xxxxxxS01)

Manufacturer

SICK AG
Erwin-Sick-Str. 1
79183 Waldkirch
Germany

Legal information

This work is protected by copyright. Any rights derived from the copyright shall be reserved for SICK AG. Reproduction of this document or parts of this document is only permissible within the limits of the legal determination of Copyright Law. Any modification, abridgment or translation of this document is prohibited without the express written permission of SICK AG.

The trademarks stated in this document are the property of their respective owner.

© SICK AG. All rights reserved.

Original document

This document is an original document of SICK AG.

Contents

1 About this document 5
1.1 Information on the operating instructions 5
1.2 Explanation of symbols 5

2 Safety information 6
2.1 Intended use 6
2.2 Improper use 6
2.3 Cybersecurity 6
2.4 Limitation of liability 7
2.5 Modifications and conversions 7
2.6 Requirements for skilled persons and operating personnel 7
2.7 Operational safety and specific hazards 8

3 Product description 9
3.1 Scope of delivery 9
3.2 Status indicators 9
3.3 Type label 9
3.4 Type code 10
3.5 Principle of operation 11
3.5.1 Measurement principle 11
3.5.2 Person counting application 11

4 Transport and storage 14
4.1 Transport 14
4.2 Unpacking 14
4.3 Transport inspection 14
4.4 Storage 14

5 Mounting 15
5.1 Mounting instructions 15
5.2 Mounting position 15
5.3 Mounting the device 17

6 Electrical installation 18
6.1 Wiring instructions 18
6.2 Prerequisites for safe operation of the device 19
6.3 Connection diagram 22
6.4 Connection options 24
6.5 Connecting the device electrically 25

7 Operation 26
7.1 Opening the web server user interface (SOPASair) 26
7.2 Overview 26
7.3 User levels 26
7.4 General settings 27

7.5 PeCo settings ... 28
7.6 Region of interest settings ... 30
7.7 Counter ... 32
7.8 Room capacity ... 33
7.9 Statistics ... 33
7.10 About ... 34
7.11 Communication via REST API ... 34
7.12 Service and diagnostics: Operation with SOPAS ET ... 36
7.12.1 Communication in SOPAS ET via SOPAS commands ... 37

8 Maintenance ... 39
8.1 Maintenance plan ... 39
8.2 Cleaning ... 39

9 Troubleshooting ... 40
9.1 General faults, warnings, and errors ... 40
9.2 Repairs ... 40
9.3 Returns ... 40
9.4 Disposal ... 41

10 Technical data ... 42
10.1 Features ... 42
10.2 Mechanics/electronics ... 42
10.3 Dimensioned drawing ... 44
10.4 Performance ... 45
10.5 Interfaces ... 45
10.6 Ambient data ... 45

11 Accessories ... 46

12 Annex ... 47
12.1 Declarations of conformity and certificates ... 47
12.2 Licenses ... 47

1 About this document

1.1 Information on the operating instructions

These operating instructions provide important information on how to use devices from SICK AG.

Prerequisites for safe work are:

- Compliance with all safety notes and handling instructions supplied.
- Compliance with local work safety regulations and general safety regulations for device applications

The operating instructions are intended to be used by qualified personnel and electrical specialists.

NOTE
Read these operating instructions carefully to familiarize yourself with the device and its functions before commencing any work.

The operating instructions are an integral part of the product. Store the instructions in the immediate vicinity of the device so they remain accessible to staff at all times. Should the device be passed on to a third party, these operating instructions should be handed over with it.

These operating instructions do not provide information on the handling and safe operation of the machine or system in which the device is integrated. Information on this can be found in the operating instructions for the machine or system.

1.2 Explanation of symbols

Warnings and important information in this document are labeled with symbols. Signal words introduce the instructions and indicate the extent of the hazard. To avoid accidents, damage, and personal injury, always comply with the instructions and act carefully.

DANGER
... indicates a situation of imminent danger, which will lead to a fatality or serious injuries if not prevented.

WARNING
... indicates a potentially dangerous situation, which may lead to a fatality or serious injuries if not prevented.

CAUTION
... indicates a potentially dangerous situation, which may lead to minor/slight injuries if not prevented.

NOTICE
... indicates a potentially harmful situation, which may lead to material damage if not prevented.

NOTE
... highlights useful tips and recommendations as well as information for efficient and trouble-free operation.

2 Safety information

2.1 Intended use

The MRS1000 PeopleCounter is a combination of a 3D LiDAR sensor (**MRS1000**) and a SensorApp (**PeopleCounter**) developed for a people counting (PeopleCounting) application.

Measurement data is generated in the form of a point cloud and people can be identified by their contours. This process runs anonymously and without recording any personal information.

Thanks to the four scan planes of the LiDAR sensor, the direction of movement of each person is clearly established. On this basis, the person entry and exit area can be determined and the maximum permissible number of people in a delineated area can be monitored.

In order to always be able to keep an eye on the current utilization of the area, the counting status is provided via the digital outputs of the device.

Thanks to the ability to combine or connect several devices in an existing network (host/guest operation), it is also possible to monitor large areas with multiple access points, such as shopping centers, airports or trade fair buildings.

SICK AG assumes no liability for losses or damage arising from the use of the product, either directly or indirectly. This applies in particular to use of the product that does not conform to its intended purpose and is not described in this documentation.

2.2 Improper use

Any use outside of the stated areas, in particular use outside of the technical specifications and the requirements for intended use, will be deemed to be incorrect use.

- The device does not constitute a safety component in accordance with the respective applicable safety standards for machines.
- The device must not be used in explosion-hazardous areas, in corrosive environments or under extreme environmental conditions.
- Any use of accessories not specifically approved by SICK AG is at your own risk.



WARNING
Danger due to improper use!

Any improper use can result in dangerous situations.

Therefore, observe the following information:

- Product should be used only in accordance with its intended use.
- All information in the documentation must be strictly observed.
- Shut down the product immediately in case of damage.

2.3 Cybersecurity

Overview

To protect against cybersecurity threats, it is necessary to continuously monitor and maintain a comprehensive cybersecurity concept. A suitable concept consists of organizational, technical, procedural, electronic, and physical levels of defense and considers suitable measures for different types of risks. The measures implemented in this product can only support protection against cybersecurity threats if the product is used as part of such a concept.

You will find further information at www.sick.com/psirt, e.g.:

- General information on cybersecurity
- Contact option for reporting vulnerabilities
- Information on known vulnerabilities (security advisories)

2.4 Limitation of liability

Relevant standards and regulations, the latest technological developments, and our many years of knowledge and experience have all been taken into account when compiling the data and information contained in these operating instructions. The manufacturer accepts no liability for damage caused by:

- Non-adherence to the product documentation (e.g., operating instructions)
- Incorrect use
- Use of untrained staff
- Unauthorized conversions or repair
- Technical modifications
- Use of unauthorized spare parts, consumables, and accessories

2.5 Modifications and conversions

NOTICE

Modifications and conversions to the device may result in unforeseeable dangers.

Interrupting or modifying the device or SICK software will invalidate any warranty claims against SICK AG. This applies in particular to opening the housing, even as part of mounting and electrical installation.

2.6 Requirements for skilled persons and operating personnel

WARNING

Risk of injury due to insufficient training.

Improper handling of the device may result in considerable personal injury and material damage.

- All work must only ever be carried out by the stipulated persons.

The following qualifications are required for various activities:

Table 1: Activities and technical requirements

Activities	Qualification
Mounting, maintenance	▪ Basic practical technical training ▪ Knowledge of the current safety regulations in the workplace
Electrical installation, device replacement	▪ Practical electrical training ▪ Knowledge of current electrical safety regulations ▪ Knowledge of the operation and control of the devices in their particular application
Commissioning, configuration	▪ Basic knowledge of the computer operating system used ▪ Basic knowledge of the design and setup of the described connections and interfaces ▪ Basic knowledge of data transmission
Operation of the device for the particular application	▪ Knowledge of the operation and control of the devices in their particular application ▪ Knowledge of the software and hardware environment for the particular application

2.7 Operational safety and specific hazards

Please observe the safety notes and the warnings listed here and in other sections of this product documentation to reduce the possibility of risks to health and avoid dangerous situations.



CAUTION
Optical radiation: Class 1 Laser Product

The accessible radiation does not pose a danger when viewed directly for up to 100 seconds. It may pose a danger to the eyes and skin in the event of incorrect use.

- Do not open the housing. Opening the housing may increase the level of risk.
- Current national regulations regarding laser protection must be observed.

Caution – Use of controls or adjustments or performance of procedures other than those specified herein may result in hazardous radiation exposure.

It is not possible to entirely rule out temporary disorienting optical effects, particularly in conditions of dim lighting. Disorienting optical effects may come in the form of dazzle, flash blindness, afterimages, photosensitive epilepsy, or impairment of color vision, for example.



WARNING
Electrical voltage!

Electrical voltage can cause severe injury or death.

- Work on electrical systems must only be performed by qualified electricians.
- The power supply must be disconnected when attaching and detaching electrical connections.
- The product must only be connected to a voltage supply as set out in the requirements in the operating instructions.
- National and regional regulations must be complied with.
- Safety requirements relating to work on electrical systems must be complied with.



WARNING
Risk of injury and damage caused by potential equalization currents!

Improper grounding can lead to dangerous equipotential bonding currents, which may in turn lead to dangerous voltages on metallic surfaces, such as the housing. Electrical voltage can cause severe injury or death.

- Work on electrical systems must only be performed by qualified electricians.
- Follow the notes in the operating instructions.
- Install the grounding for the product and the system in accordance with national and regional regulations.

3 Product description

3.1 Scope of delivery

The delivery of the device includes the following components:

Table 2: Scope of delivery

Item	Component	Comments
1	Device in the version ordered	Depending on version Without connecting cables and brackets
1	Set of protective caps for electrical connections	Attached to the connections
1	Printed safety notes, multilingual	Quick guide and general safety notes

The actual scope of delivery may differ for special designs, additional orders or due to the latest technical changes.

3.2 Status indicators

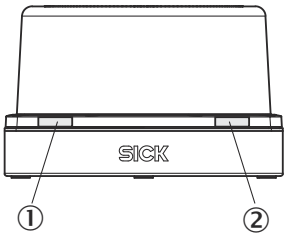

Figure 1: Status indicators

① LED1

② LED2

LED1 (color)	LED2 (color)	Description
● (Red)	● (Red)	Start up, firmware update
☀ (Red) - ☀ (Yellow) - ☀ (Green) Alternating for 20 s		Identifying the device
● (Red)	● (Red)	Contamination error with strong contamination [1]
☀ (Yellow)	☀ (Yellow)	Contamination warning [1]
☀ (Green)	☀ (Green)	No contamination [1]
Off	Off	Normal operation

● = illuminated; ☀ = flashing

1) Only when contamination indication is activated see "General settings", page 27.

3.3 Type label

The type label gives information for identification of the device.

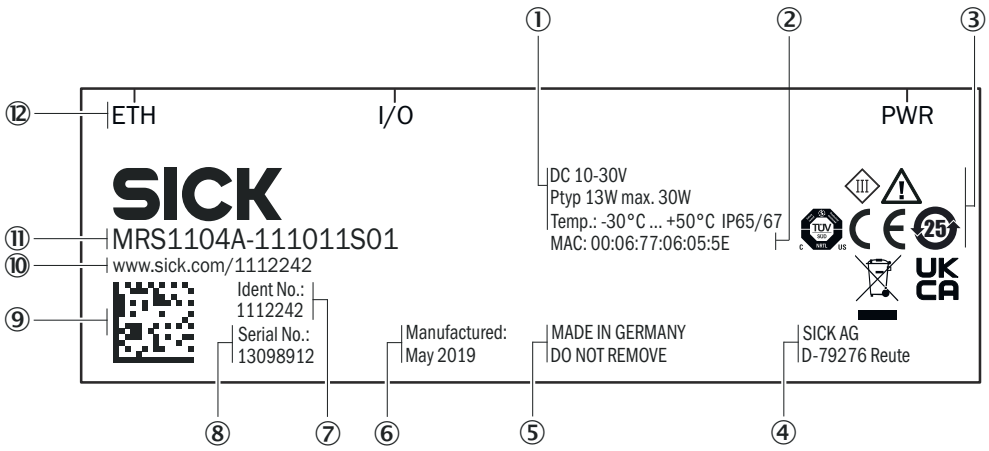

Figure 2: MRS1000 / LMS4500 PeopleCounter type label (example)

① Voltage supply, typical power, max. power, operating temperature, enclosure rating
② MAC address
③ Conformity mark/certification mark, symbol: Observe the operating instructions!
④ Manufacturer
⑤ Production location, note: Do not remove type label
⑥ Production date
⑦ Part number
⑧ Serial number
⑨ Data Matrix code with product data and link to product page
⑩ Web address of product page
⑪ Type code
⑫ Labeling of connections: Ethernet (ETH), inputs/outputs (I/O), supply voltage (PWR)

3.4 Type code

Type code structure

MRS abccd – efghijk

Position	Description	Characteristic
-	Device name type	MRS: Multilayer Range Sensor
a	Device type	1: MRS1000
b	Version (10% range & field of view (FOV))	1: 16m @10%, FOV 275°
c	Module (sender and receiver units (SRU))	04: 4 SEE (-2.5°; 0°; 2.5°; 5°)
d	Application	A: Applified
–		
e	Housing version	0: IP65 enclosure rating 1: IP67 enclosure rating 9: Special version
f	Connection	1: Rotatable connector, 3 x M12 9: Special version
g	Version	1: Standard 9: Special version
h	Laser type	0: Laser class 1, infrared
i	Motor frequency	1: 12.5 Hz

Position	Description	Characteristic
j	Color tone / label	0: blue (RAL 5012) 1: gray (RAL 7042)
k	Special variants	S01: People counting app

3.5 Principle of operation

3.5.1 Measurement principle

The device is an opto-electronic LiDAR sensor that scans the outline of its surroundings with the help of laser beams without making contact. The device measures its surroundings in two-dimensional polar coordinates, relative to its measurement origin. This is marked by a circular indentation in the center of the optics cover. If a laser beam strikes an object, the position of that object is determined in terms of distance and angle.

This is carried out in 4 spread-out scan layers (scan layers 1 to 4)

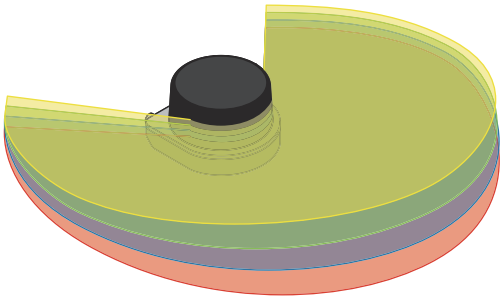

Figure 3: Scan layers

3.5.2 Person counting application

The SensorApp developed for the people counting application uses the 4 scan planes of the device to detect the direction of movement of people. One device is therefore enough to identify where people enter and exit.

The special algorithm detects the outline of people, whereby even people walking next to them are reliably identified.

The recorded data can be output via the digital outputs or the software interface.

If several access points are to be monitored, devices can be linked via the **Sensor Fusion** function or the linking of inputs and outputs.

Sensor fusion (host/guest operation)

The **Sensor Fusion** function can be used to monitor areas with several access points. To do so, the devices communicate via Ethernet connection by means of UDP (User Datagram Protocol, Port: 2115). One device assumes the role of host and collects the counting results of all linked devices (guest) in an overall result. The reactions set on the host when the warning threshold or maximum permissible number of people is reached (e.g. switching the outputs to control warning lights, digital outputs 1 to 3) are adopted by all connected guests. The digital inputs for correcting the number of people (digital inputs 6 and 7) are deactivated on the guests. A reset via digital input 8 at the host resets all devices, a reset at a guest only resets the respective device.

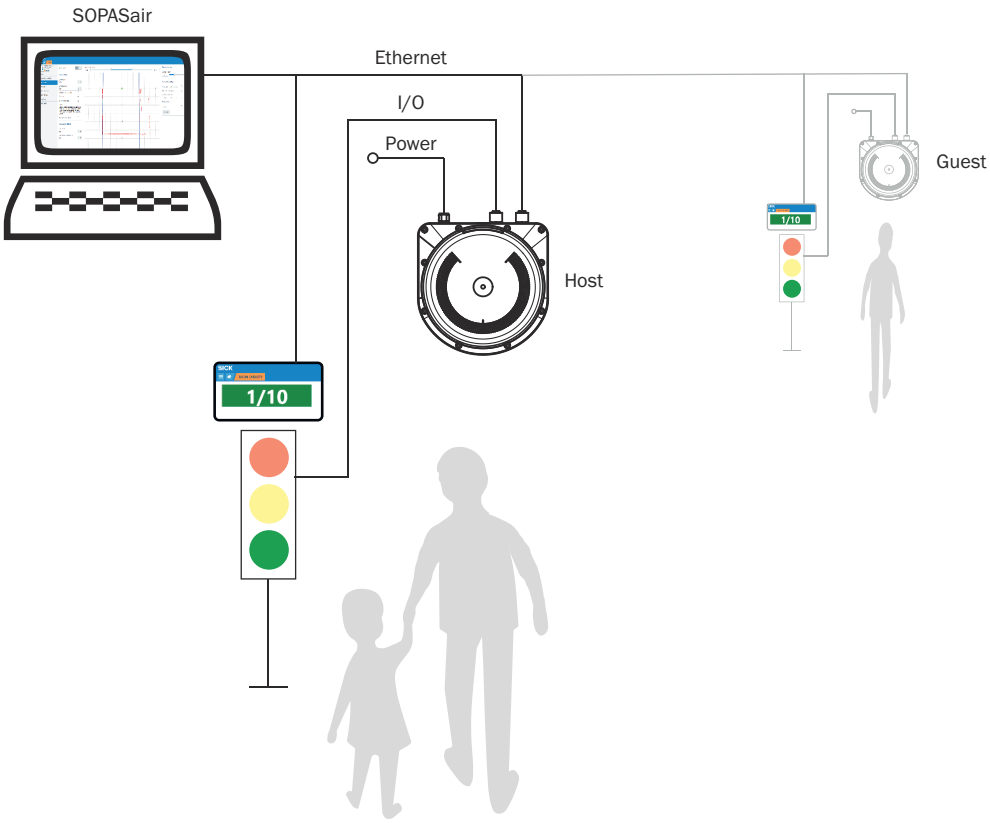

Figure 4: Host/guest operation

I/O link

Areas with multiple access points can be monitored by linking several devices via the digital inputs and outputs. For this purpose, the counting pulses of one device (host, data supplier) are forwarded via the digital output to the digital input of another device (guest, data collector). By linking the output of a host with the input of a guest, the collected results can be fed back. Transmission to a third device is also possible.

The I/O link is made as follows:

- Wiring of digital output 4 (host, data supplier) to digital input 7 (guest, data collector) and digital output 5 (guest, data supplier) to digital input 6 (guest, data collector)
- The set signal pulse length at the host (recommendation: 10 ms) must be at least twice as large as the set debounce time of the guest (recommendation: 5 ms).

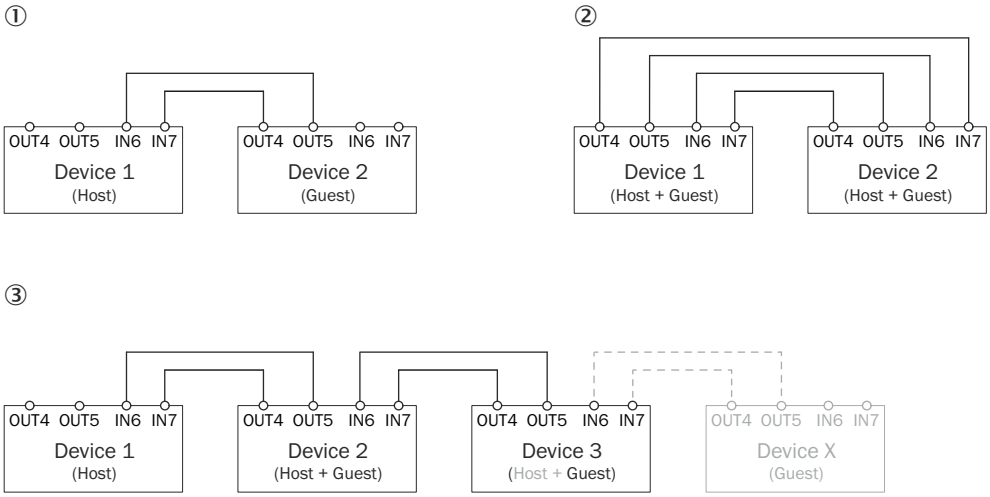

Figure 5: Variants of the IO link

① 2 devices, of which 1 device is the host, 1 device the guest. The data of both devices is available in device 1. The current occupancy can be read out via SOPASair or via the digital outputs only on device 1.

② 2 devices, both devices are host and guest. The data of both devices is available in device 1 and device 2. Please note that, with this link, the **Counting correction** function must be deactivated on both devices. The current occupancy can be read out via SOPASair or via the digital outputs on device 1 and device 2.

③ 3 or more devices, of which 1 device is the host, 1 or more devices are the host and guest, 1 device is the guest. The data of all devices is available in device 1. Please note that, with this link, the **Counting correction** function must be activated for device 2. The current occupancy can be read out via SOPASair or via the digital outputs only on device 1.

When using digital outputs 1 to 3 (e.g. switching the outputs to control warning lights), it must be noted that only those results are output which are available in the respective device. Recommendation: Use only the digital outputs of the device on which the data of all devices is available.

If the **Counting correction** function is deactivated for a host, only the counts of actually recorded people are transmitted; manual corrections of the number of people in the room made via SOPASair or the digital inputs of the data supplier are not.

4 Transport and storage

4.1 Transport

NOTICE
Damage due to improper transport!

- The product must be packaged with protection against shock and damp.
- Recommendation: Use the original packaging.
- Note the symbols on the packaging.
- Do not remove packaging until immediately before you start mounting.

4.2 Unpacking

- To protect the device against condensation, allow it to equilibrate with the ambient temperature before unpacking if necessary.
- Handle the device with care and protect it from mechanical damage.
- To avoid ingress of dust and water, only remove the protective elements, e.g. protective caps of the electrical connections just before attaching the connecting cable.

4.3 Transport inspection

Immediately upon receipt in Goods-in, check the delivery for completeness and for any damage that may have occurred in transit. In the case of transit damage that is visible externally, proceed as follows:

- Do not accept the delivery or only do so conditionally.
- Note the scope of damage on the transport documents or on the transport company's delivery note.
- File a complaint.

NOTE
Complaints regarding defects should be filed as soon as these are detected. Damage claims are only valid before the applicable complaint deadlines.

4.4 Storage

- Electrical connections are provided with a protective cap.
- Do not store outdoors.
- Store in a place protected from moisture and dust.
- Recommendation: Use the original packaging.
- To allow any residual dampness to evaporate, do not package in airtight containers.
- Do not expose to any aggressive substances.
- Protect from sunlight.
- Avoid mechanical shocks.
- Storage temperature: see "Technical data", page 42.
- Relative humidity: see "Technical data", page 42.
- For storage periods of longer than 3 months, check the general condition of all components and packaging on a regular basis.

5 Mounting

5.1 Mounting instructions

- Observe the technical data.
- Protect the sensor from direct sunlight.
- To prevent condensation, avoid exposing the device to rapid changes in temperature.
- The mounting site has to be designed for the weight of the device.
- Protect the device from moisture, contamination, and damage.
- Make sure that the status indicator is clearly visible.
- When mounting the device up high, and in particular to secure the device during mounting, a retaining cable for fastening is available as an accessory.

5.2 Mounting position

For reliable function, observe the following framework conditions when positioning the device.

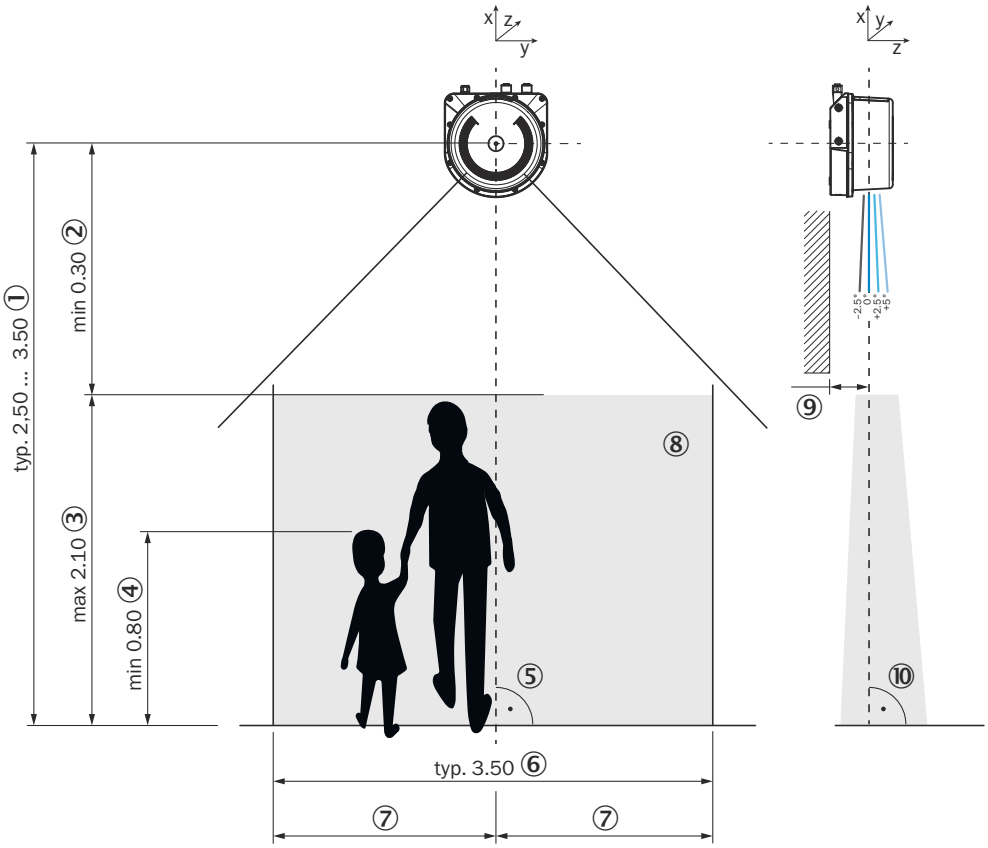

Figure 6: Mounting position

① Mounting height: Typically 2.50 to 3.50 m; minimum 2.00 m; max. 5.00 m
② Minimum distance from origin of measurement to people
③ Person size: Max. 2.10 m
④ Person size: Min. 0.80 m
⑤ Tilt of device around z-axis: Typically 0°; max. ±90°
⑥ Horizontal detection area: Typically 3.50 m; max. 10.00 m
⑦ Position of the device over the detection area: Typically central to prevent shading by people walking by
⑧ Detection area: Typically 3.50 m x 2.10 m (W x H); max. 10.00 m x 2.10 m (W x H)
⑨ Distance of the device to objects (e.g. walls): Observe scan plane angle (-2.5°/0°/+2.5°/+5°), if needed increase distance or tilt device around y-axis
⑩ Tilt of device around y-axis: Typically 0°; max. ±10°

Increase in counting accuracy

Also note the following information when selecting and setting up the detection area.

The following situations cause inaccuracies in counting and should therefore be avoided:

- People who are stay in the detection area, special groups of people
- People who walk and stand very close to and behind one another in a crowd
- People who move into the detection area from the side.
- Doors which move into the detection area when opening and closing
- Objects located in the detection area.
- Height differences of the floor in the detection area (e.g. steps)

5.3 Mounting the device

1. Mount the device in a suitably prepared bracket using the fixing holes provided (see figure 15, page 44). Mounting brackets are available as accessories, "Accessories", page 46.
2. Make the electrical connection. Attach and tighten a voltage-free cable, see "Connecting the device electrically", page 25.
3. Switch on the supply voltage.

6 Electrical installation

6.1 Wiring instructions

NOTE

Pre-assembled cables can be found on the product page.

The product page can be accessed via the **SICK Product ID**: **pid.sick.com/{P/N}/{S/N}**

{P/N} corresponds to the part number of the product, see type label.

{S/N} corresponds to the serial number of the product, see type label (if indicated).

NOTICE

Faults during operation and defects in the device or the system

Incorrect wiring may result in operational faults and defects.

- Follow the wiring notes precisely.

All electrical connections of the device are configured as M12 round connectors.

The enclosure rating stated in the technical data is achieved only with screwed plug connectors or protective caps.

All circuits connected to the device must be configured as SELV or PELV circuits. SELV = safety extra-low voltage, PELV = protective extra-low voltage.

Observe the following notes to ensure safe and trouble-free operation:

- Connect the connecting cables in a de-energized state. Do not switch on the supply voltage until installation is complete and all connecting cables have been connected to the device and control.
- Wire cross-sections in the supply cable from the customer's power system should be designed in accordance with the applicable standards. Protect the device with an external slow-blow fuse of 5 A at the beginning of the supply cable, viewed from the voltage supply.
- The specified enclosure rating of the device when mounted is reached only if suitable mating connectors or protective caps are used.
- Do not open the screwed housing of the device, since the warranty will then become void.
- Turn the rotatable electrical connections max 270° from end position to end position.
- Prior to connecting the I/O line, check the device configuration for the inputs/outputs.
- Avoid tensile loads to the connecting cables.
- Maximum cable lengths for the voltage supply depending on the power supply voltage used (conditions: cable cross-section 0.34 mm^2, 20 °C cable temperature, 10 V applied to the device, max. power consumption as per type label): 6.5 m at 12 V; 46.5 m at 24 V; 66.5 m at 30 V.
- The power supply unit must be able to bridge a power failure of 20 ms and provide safe isolation (SELV/PELV). Suitable power supply units are available as accessories from SICK.

6.2 Prerequisites for safe operation of the device



WARNING
Risk of injury and damage caused by electrical current!

As a result of equipotential bonding currents between the device and other grounded devices in the system, faulty grounding of the device can give rise to the following dangers and faults:

- Dangerous voltages are applied to the metal housings.
- Devices will behave incorrectly or be destroyed.
- Cable shielding will be damaged by overheating and cause cable fires.

Remedial measures

- Only skilled electricians should be permitted to carry out work on the electrical system.
- If the cable insulation is damaged, disconnect the voltage supply immediately and have the damage repaired.
- Ensure that the ground potential is the same at all grounding points.
- Where local conditions do not meet the requirements for a safe earthing method, take appropriate measures. For example, ensure low-impedance and current-carrying equipotential bonding.

The device is connected to the peripheral devices (any local trigger sensor(s), system controller) via shielded cables. The cable shield – for the data cable, for example – rests against the metal housing of the device.

The device can be grounded through the cable shield or through a blind tapped hole in the housing, for example.

If the peripheral devices have metal housings and the cable shields are also in contact with their housings, it is assumed that all devices involved in the installation have the **same ground potential**.

This is achieved by complying with the following conditions:

- Mounting the devices on conductive metal surfaces
- Correctly grounding the devices and metal surfaces in the system
- If necessary: low-impedance and current-carrying equipotential bonding between areas with different ground potentials

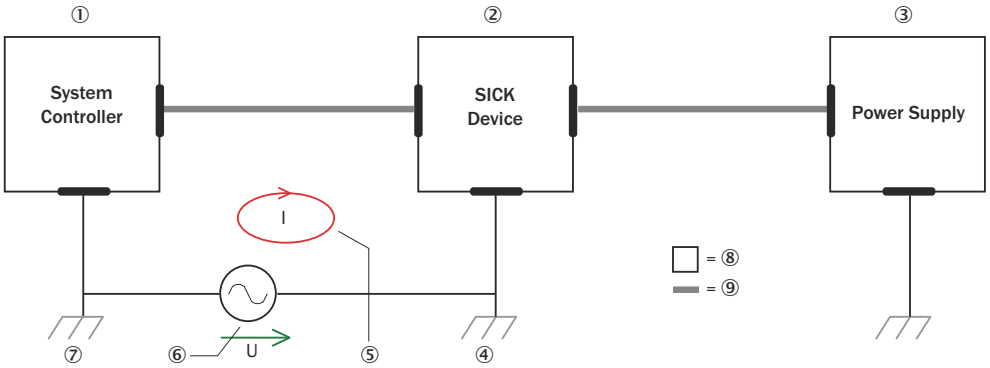

Figure 7: Example: Occurrence of equipotential bonding currents in the system configuration

① System controller
② Device
③ Voltage supply
④ Grounding point 2
⑤ Closed current loop with equalizing currents via cable shield
⑥ Ground potential difference
⑦ Grounding point 1
⑧ Metal housing
⑨ Shielded electrical cable

If these conditions are not fulfilled, equipotential bonding currents can flow along the cable shielding between the devices due to differing ground potentials and cause the hazards specified. This is, for example, possible in cases where there are devices within a widely distributed system covering several buildings.

Remedial measures

The most common solution to prevent equipotential bonding currents on cable shields is to ensure low-impedance and current-carrying equipotential bonding. If this equipotential bonding is not possible, the following solution approaches serve as a suggestion.

NOTICE

We expressly advise against opening up the cable shields. This would mean that the EMC limit values can no longer be complied with and that the safe operation of the device data interfaces can no longer be guaranteed.

Measures for widely distributed system installations

On widely distributed system installations with correspondingly large potential differences, the setting up of local islands and connecting them using commercially available **electro-optical signal isolators** is recommended. This measure achieves a high degree of resistance to electromagnetic interference.

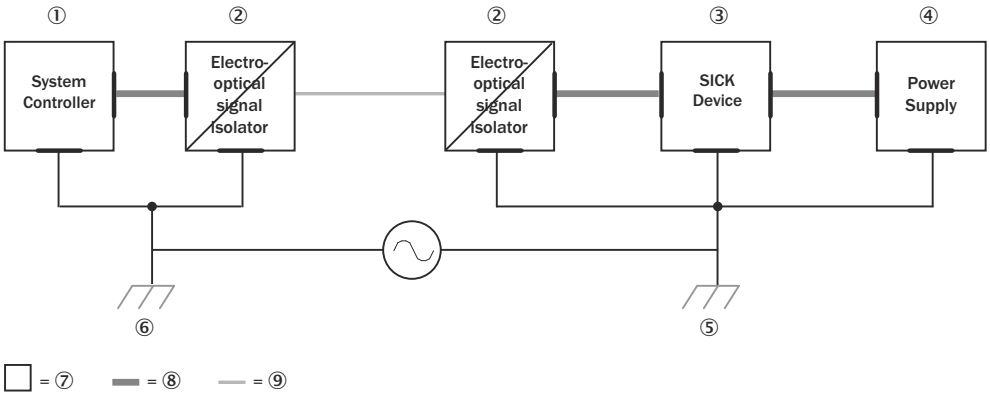

Figure 8: Example: Prevention of equipotential bonding currents in the system configuration by the use of electro-optical signal isolators

① System controller
② Electro-optical signal isolator
③ Device
④ Voltage supply
⑤ Grounding point 2
⑥ Grounding point 1
⑦ Metal housing
⑧ Shielded electrical cable
⑨ Optical fiber

The use of electro-optical signal isolators between the islands isolates the ground loop. Within the islands, a stable equipotential bonding prevents equalizing currents on the cable shields.

Measures for small system installations

For smaller installations with only slight potential differences, insulated mounting of the device and peripheral devices may be an adequate solution.

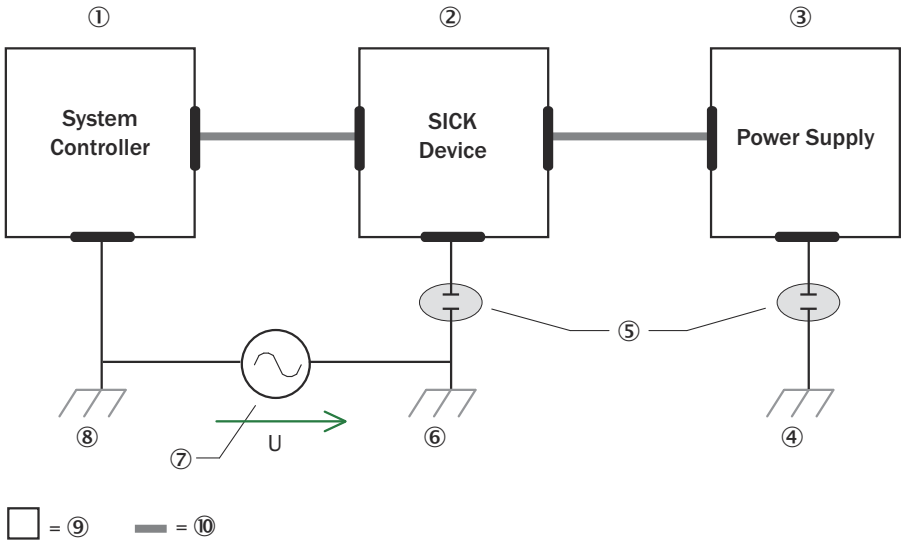

Figure 9: Example: Prevention of equipotential bonding currents in the system configuration by the insulated mounting of the device

① System controller
② Device
③ Voltage supply
④ Grounding point 3
⑤ Insulated mounting
⑥ Grounding point 2
⑦ Ground potential difference
⑧ Grounding point 1
⑨ Metal housing
⑩ Shielded electrical cable

Even in the event of large differences in the ground potential, ground loops are effectively prevented. As a result, equalizing currents can no longer flow via the cable shields and metal housing.

NOTICE

The voltage supply for the device and the connected peripheral devices must also guarantee the required level of insulation.

Under certain circumstances, a tangible potential can develop between the insulated metal housings and the local ground potential.

6.3 Connection diagram

NOTE

The recommended connecting cables and their associated technical data can be found on the online product page.

The product page can be accessed via the **SICK Product ID: pid.sick.com/{P/N}/{S/N}**

{P/N} corresponds to the part number of the product, see type label.

{S/N} corresponds to the serial number of the product, see type label (if indicated).

PWR connection

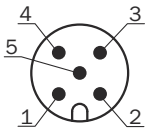

Figure 10: Male connector, M12, 5-pin, A-coded

Table 3: Pin assignment for PWR connection

Contact	Identifier	Description	Wire color, part number 2095733 [1]
1	Vs	Supply voltage: +10 ... +30 V DC	Brown
2	-	Reserved	White
3	GND	Supply voltage: 0 V	Blue
4	IN8 / OUT8	Digital input 8: Set all counters to 0 (reset)	Black
5	-	Reserved	Gray

1) Data only valid when using the specified connecting cable with flying leads, which is available as an accessory

Ethernet connection

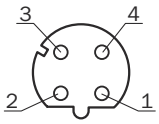

Figure 11: M12 female connector, 4-pin, D-coded

Table 4: Pin assignment for Ethernet connection

Contact	Identifier	Description
1	TX+	Sender+
2	RX+	Receiver+
3	TX-	Sender-
4	RX-	Receiver-

I/O connection

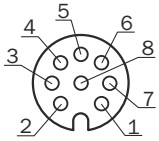

Figure 12: Female connector, M12, 8-pin, A-coded

Table 5: Pin assignment for I/O connection

Contact	Identifier	Description	Wire color part no. 2134055 [1]
1	IN1 / OUT1	Digital output 1: Room capacity reached (traffic light: red)[2]	White
2	IN2 / OUT2	Digital output 2: Room capacity warning threshold reached (traffic light: yellow)[2]	Brown

Contact	Identifier	Description	Wire color part no. 2134055 [1]
3	IN3 / OUT3	Digital output 3: Room capacity below warning threshold (traffic light: green)[2]	Green
4	IN4 / OUT4	Digital output 4: Person leaves room [2], [3]	Yellow
5	IN5 / OUT5	Digital output 5: Person enters room [2], [3]	Gray
6	IN6 / OUT6	Digital input 6: Increase the number of people in the room by 1 [4], [5]	Pink
7	GND INx/OUTx	Ground for all digital inputs / outputs	Blue
8	IN7 / OUT7	**Counting rate monitoring function deactivated:** Digital input 7: Reduce the number of people in the room by 1 [4], [6] **Counting rate monitoring function activated:** Digital output 7: **Counting rate** exceeded	Red

1) Data only valid when using the specified connecting cable with flying leads, which is available as an accessory.
2) Active high/Active low configurable
3) Pulse length and pause time between two pulses configurable
4) Debounce time configurable
5) If the **Counting correction** function is activated, the Person entry area counter reading will increase.
6) If the **Counting correction** function is activated, the Person exit area counter reading increases.

6.4 Connection options

The following figures show connection diagrams.

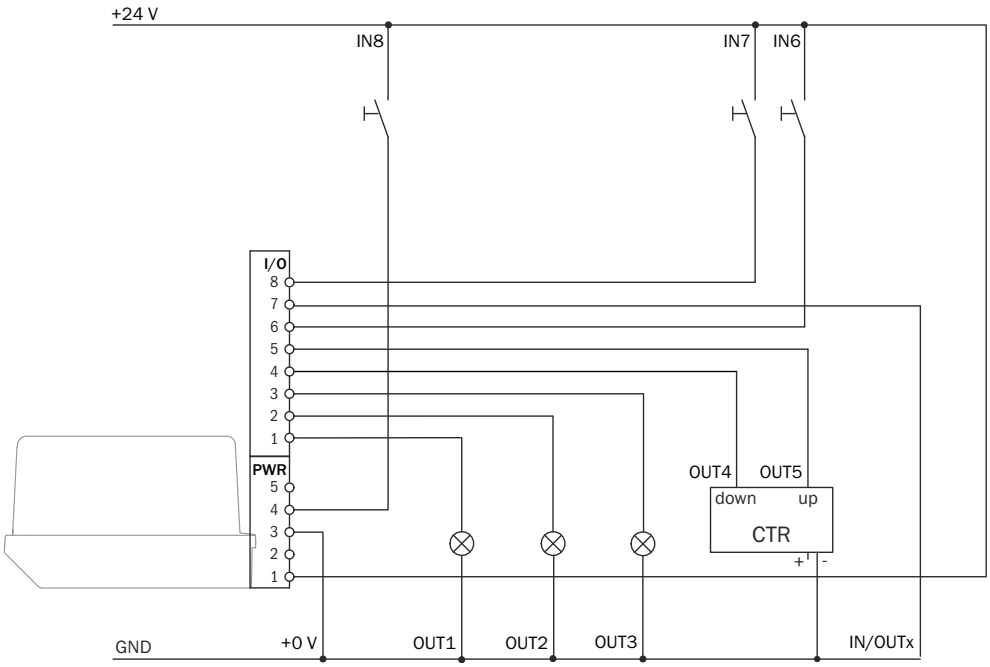

Figure 13: Connection example of stand-alone operation (single device) or host in host/guest operation, PNP outputs, active high inputs

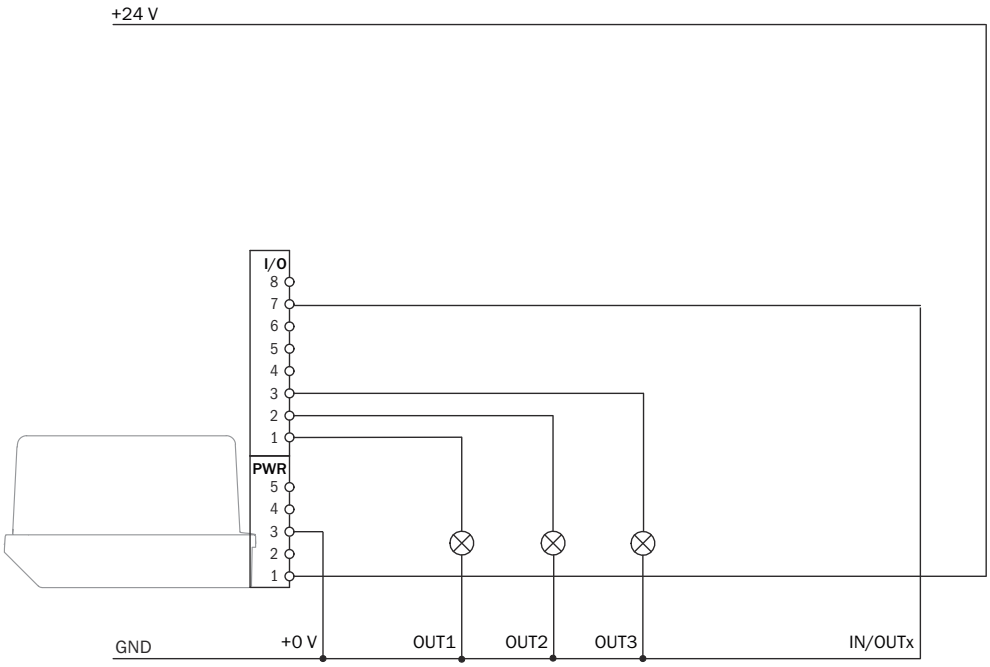

Figure 14: Connection example of guest in host/guest operation, PNP outputs

6.5 Connecting the device electrically

NOTICE

Observe the wiring instructions (see "Wiring instructions", page 18) and prerequisites for safe operation (see "Prerequisites for safe operation of the device", page 19).

1. Ensure the voltage supply is not connected.
2. Connect the device according to the connection diagram, see "Connection diagram", page 22.

7 Operation

7.1 Opening the web server user interface (SOPASair)

Before opening the user interface, perform the following work steps:

- Connect the device to the computer via Ethernet.
- Set up the voltage supply for the device.
- Ensure that the computer and device are located in the same network.
- Ensure that the computer uses a different IP address than the device, but is in the same IP address range (e.g. 192.168.0.xxx)

Opening user interface:

1. Open web browser (recommendation: Google Chrome).
2. Enter the device IP address into the address line. The standard IP address is: 192.168.0.1

✓ The SOPASair user interface is displayed.

7.2 Overview

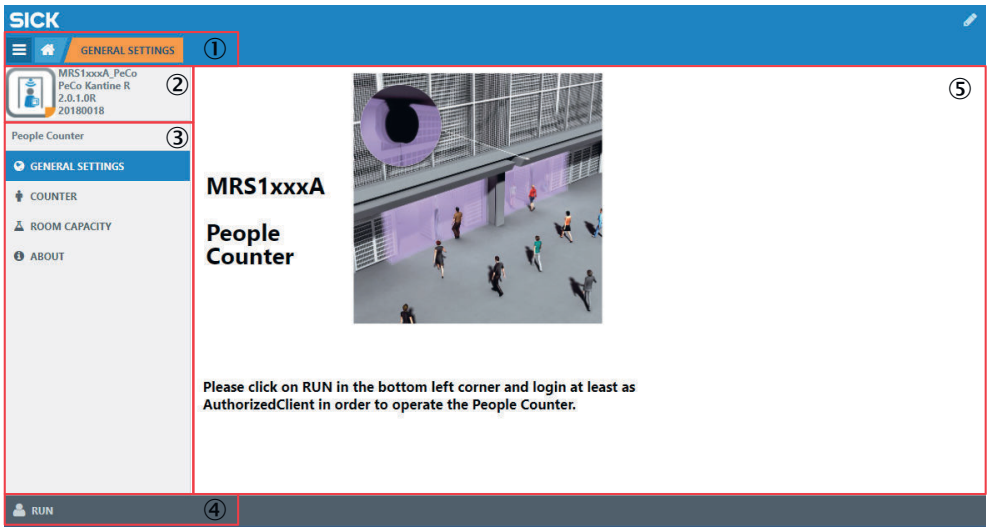

① Show/Hide menu bar buttons and open start menu; display of open menu

② Device information display

③ Menu bar, number of displayed menus depends on user level

④ User level button and display

⑤ Workspace

7.3 User levels

The device has different user levels.

The current user level is displayed in the lower area of the user interface.

1. Click on the display of the current user level.

✓ The **Login** input mask opens.

2. Select user level (**Username**), enter password (**Password**) and click on **LOGIN** .

User levels	Password	User/Authorizations
RUN	-	Customers: Display only, no configuration

User levels	Password	User/Authorizations
MAINTENANCE	`main`	Staff: Reset counter, correct counter reading, view counting statistics
AUTHORIZED CLIENT	`client`	Technical staff: Install and configure device

7.4 General settings

Basic device settings are made in this menu.

The availability of the individual function depends on the selected user level, see "User levels", page 26.

Function	Description
TCP/IP settings	Configure network address. All devices must have a different IP address for host/guest operation. Settings with static IP or DHCP mode. The device is restarted via the **Apply IP settings** button. SOPASair must then be opened with the new IP address of the device.
Digital I/O Settings	Digital outputs 1 to 3 (display of room capacity) and 4 to 5 (display of counter pulses) can be inverted. Length of the counting pulses, duration of the pause between two counting pulses and debounce time for manual counter correction and counter reset can be adjusted.
Device name	To facilitate identification, a name can be assigned for every device, e.g. “Main input”. The change is saved on the device with the **Save name permanently** button.
Reboot and device identification	The device is restarted via the **Reboot device** button. When the **Identify device** button is activated, both LEDs of the device light up for 20 s with an alternating red-yellow-green color.
Time settings	The device does not have an internal clock. The time must be set to use certain functions (e.g. Daily Reset). The **Set Time** switch is used to apply the computer time. The time zone is set via the **Time zone** drop-down menu. The time is lost when the voltage supply is interrupted/the device is restarted. An NTP server, which is used for setting the sensor time in UTC, is set up via the **Use NTP server** check box. It is still necessary to set the time zone in this mode. After activating the NTP server and setting the correct IP address and port, it takes about 5 seconds until the time is correctly set. If this is not the case, the NTP server has not been reached.

Function	Description
Contamination indication	The device has an optics cover to protect it. This optics cover can get dirty. Contamination reduces the energy emitted and received by the laser beam. As a result, scanned objects appear to have a lower remission factor than they actually have and, from a certain degree of contamination, it will no longer be possible to perform measurements. The contamination is constantly measured by a separate system during operation. A contamination warning is output first for the different degrees of contamination. If the optics cover is not cleaned and contamination increases, then a contamination error is output. The contamination indication can be activated or deactivated. If contamination indication is active, the amount of contamination required before the device triggers a warning or error message can be defined. The parameterization “Low” corresponds to the highest possible sensitivity compared to contamination on the optics cover. With this setup, the required amount of contamination for triggering an alarm or an error is less than the parameterization “Medium” or “High”. You can also set whether the contamination status should be indicated by LED. In this case, “yellow” indicates warning and “red” an error.
Parameters	The **Save parameters** button can be used to manually save parameter settings on the device. If parameters have been changed, the last saved parameter settings can be reloaded via the **Load parameters** button. This is only possible when the counter is deactivated. The parameters can be reset to factory settings via the **Restore default parameters** button. This function is only available in configuration mode. Resetting the parameters also deletes the statistics data. Using the **Download parameterization** and **Upload parameterization** button, the parameter file can be downloaded from the device or uploaded to the device. This function is useful for backups, when replacing devices or for using the same parameter settings on several devices. Uploading to the device is possible only when the counter is deactivated. In addition to these manual save options, parameter settings are automatically saved when the counter is activated and every 6 minutes when the counter is activated.

7.5 PeCo settings

The settings required for correct data capture are made in this menu.

The availability of the individual function depends on the selected user level, see "User levels", page 26.

Counter settings

In order to make changes, the device must be switched to configuration mode via the **Counter active** switch in the **Region of interest settings** menu (switch: **OFF**).

Function	Description
Current value IN	Current person entry area counter reading
Current value OUT	Current person exit area counter reading
Daily reset	If activated, the counter readings are automatically reset at 12:00 am and a daily protocol is displayed in the **Counter** menu in the **Last days** column.
Auto start after reboot	If activated, counting automatically starts after the device is restarted.
Reset counts after reboot	The counter reading is saved every 6 minutes. If activated, the counter readings are automatically reset after a restart. If deactivated, the saved values are applied after a restart.

Function	Description
Counting correction	If the function is deactivated, the **Current value IN** and **Current value OUT** values only take into account people who were actually counted by the device. The IN minus OUT difference does not necessarily correspond to the number of people in the room, e.g. if the current number of people in the room has been corrected via the software or the digital inputs. The correction only adjusts the current occupancy, not **IN** and **OUT**. If this function is activated, an adjustment of the current number of people in the monitored area will result in this value being taken into account for the **Current value IN** and **Current value OUT** values. If the value is decreased, the **Current value OUT** value is automatically increased. If the value is increased, the **Current value IN** is automatically increased. This can be adjusted via SOPASair or digital inputs 6 and 7. The corresponding number of counting pulses is also output via the digital outputs. However, the maximum number of output pulses for a single correction is limited to 10. Correct output of the output pulses is therefore only possible with a correction of max. 10 people. Larger corrections should therefore be carried out in several steps with a maximum of 10 people per step. If the **Current value IN** value is 0 and a person is detected as going out, the value for **Current value IN** is corrected upwards by 1. This compensates for deviations in the count with the aim that the IN minus OUT difference corresponds to the current number of people in the room.

Room capacity settings

Function	Description
Room capacity	Maximum number of people for the room capacity function (**Room capacity**).
Room capacity warn threshold [%]	Warning threshold for the room capacity, specified as a percentage of the maximum room capacity. If the output of a threshold value is not to be output, the value must be set to 100 %.
Initial value of persons inside	When activated, the entered value is added to the Current number of people in the room value. This function can be used to take into account people who are already in the room when the device is started. If the **Counting correction** function is activated, this value is only taken into account if the current values for IN and OUT are both 0.

Counting rate monitoring

Function	Description
Counting rate below threshold	Display of whether count rate is below limit: Green = yes, red = no.
Active monitoring	When activated, an alarm is triggered when more than the set number of people (**Maximal counts in time intervall**) are counted in a certain direction in the set time interval (**Time interval**). If the **both** direction is set, an alarm is triggered as soon as the sum of IN and OUT counts exceeds the set **Maximal counts in time intervall** value. The alarm is output on the IO7. Manual correction of the room capacity via the IO7 is not possible if count rate monitoring is active. The update takes place every second. If the set time interval is greater than 50 seconds, the info is updated every time interval [s] / 50 seconds. Once the warning has been triggered, it remains active for at least 60 seconds. The number of people counted in the set time interval can also be retrieved via a telegram (REST API), see "Communication via REST API", page 34.

Function	Description
Direction	Defines the counting direction that is taken into account in the **Active monitoring** function. 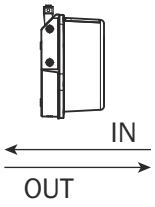
Time interval	Defines the time interval that is taken into account in the **Active monitoring** function.
Maximal counts in time interval	Defines the maximum count rate in the set interval that is to be considered permissible for the **Active monitoring** function.

Sensor fusion settings

Function	Description
Collect data of multiple devices	If activated, the counts of several devices can be detected together (host/guest operation)
This device is the host	For host/guest operation, one device must be defined as the host. The counts of all devices can be merged on this device. The IP address of the host must be entered at the guests. Note: The device defined as the host has increased processing load. In order to prevent problems with excessive calculation times, the device whose detection area is the smallest or least frequently entered should be set as the host. For host/guest operation, first configure the host, then assign the guests to the host.
This device is the host	Only available if **This device is the host** is deactivated: The device is defined as a host. Enter the IP address of the host.

7.6 Region of interest settings

In this menu, the settings are made which are necessary for adjusting the device to the application environment.

The availability of the individual function depends on the selected user level, see "User levels", page 26.

The device can be switched to configuration mode using the **Counter active** switch (switch: **OFF**). If the switch is reset to **ON**, the changes made are transmitted to the device. If the floor has not been taught in yet (**Sensor height above floor** value is 0 and no horizontal blue line is visible in the Scan View), automated teach-in of the floor in the detection area takes place at the same time. The detection area must be free of people and objects for this purpose. The taught-in floor area is displayed with 4 blue lines for testing purposes (1 line per scan plane).

Floor detection

Function	Description
Auto detect floor	When this button is pressed, automated teach-in of the floor in the detection area takes place. The detection area must be free of people and objects for this purpose. The taught-in floor area is displayed with 4 blue lines for testing purposes (1 line per scan plane). When the (**Active counter ON**) counting mode is activated and the device is started, the following situations may occur: If the stored value for **Sensor height above floor** is greater than 0, this value is used. If the stored value for **Sensor height above floor** is equal to 0, automated teach-in of the floor in the detection area takes place. The values of the automated teach-in are not recognized as valid and taken into account if a slope greater than 10 % is detected in one of the scan planes, if there is a height difference > 50 cm between two scan planes or if a scan plane does not provide any values.
Sensor height above floor [mm]	Manual input of the sensor height above the floor to define the floor (if the automated teach-in function does not provide correct results, e.g. due to a grid in the floor). A manual input overwrites previous automated teach-in of the floor.

Geometric settings

Function	Description
Orientation offset [°]	The orientation of the device is automatically identified with an inertial measuring unit (IMU). The measurement can exhibit small deviations. A possible deviation can be corrected using the slider.
Minimum height [mm] and **Maximum height [mm]**	Minimum height and maximum height of the people to be detected. Notes: • A large height range has an influence on the processing load of the device. A small minimum height combined with a large ROI and heavy traffic can lead to performance problems that affect counting accuracy. If no children need to be detected in the application, setting the minimum height to a larger value is recommended. • In a supermarket application with shopping carts, the minimum height should be set to at least 1,100 mm to avoid false detections. Even with other objects such as large suitcases, there is a risk of false detections if the minimum height is small.
3D view	If activated, the scan data is shown in 3D in the **Scan view**.
Switch direction of IN/OUT	Change IN/OUT counting direction. By default, the device is assumed to be mounted with the top of the device facing outwards. If mounting is reversed, the counting direction can be inverted by activating the check box. The setting is permanently saved on the device and remains activated after a restart.

Rectangular masking

Function	Description
Enabled	The rectangular masking can be activated or deactivated.
X1 [mm] **Y1 [mm]** **X2 [mm]** **Y2 [mm]**	You can use rectangular masking to define an area that should not be evaluated. All scan points in this area are ignored. With this setting, you can exclude objects that are permanently located in the ROI. For example, if you have mounted the device between two doors, you can blank the space between these doors.

Upper bound of region of interest

Function	Description
Upper bound of ROI above floor [mm]	By defining the upper boundary of the ROI above the ground, it is possible to filter out low ceilings or low-hanging objects. This function should be used if the device is mounted at a distance of less than 2,100 mm above the ground. Note: • If the boundary is set to a value that is lower than the size of a person, incorrect counting may result. If the boundary value is set too high, more computing power is needed.

Scan view

The detection area of the sensor is visualized in the scan view.

The view can be changed using the cursor:

- Left mouse button pressed down: Turn and tilt.
- Right mouse button pressed down: Move.

Function	Description
Region of interest	The left and right border of the horizontal detection area can be set using the slider. Note: • To keep the processing load of the device low, the ROI should be limited to the necessary size and should not include elevations larger than 10 cm.

7.7 Counter

The counter readings are displayed in this menu.

The availability of the individual function depends on the selected user level, see "User levels", page 26.

Function	Description
Reset counts today	The counter reading can be reset via the **Reset counts** button. This concerns the values for incoming people (**IN**), outgoing people (**OUT**) and number of people in the room. All counter readings are set to 0. Exceptions: If **Initial value of persons inside** is not equal to 0, the number of people in the room is set to this value, if the **Counting correction** function is activated, the value for **IN** is also set to this value In host/guest operation: **Reset Counts** for the host also resets the guests. **Reset Counts** for the guest only resets the guest itself.
Counting rate below threshold	Displayed only if **Counting rate detection** function is activated in menu **PeCo settings** . Display of whether count rate is below limit: Green = yes, red = no.
Count today	Display of the Incoming people (**IN**) and Outgoing people (**OUT**) counter reading.
Last detected persons	Continuous protocol of the last recorded counts. The last 8 counts are displayed.

Function	Description
Last days	Continuous daily protocol of the recorded counts, only available if the **Daily reset** function is activated in the **PeCo settings** menu. The last 7 days are displayed. The display of the daily protocols are deleted via the **Reset last days** button. Deletion only affects the display of the daily protocols, the saved counts on the display remain and continue to be displayed in the diagrams in the **Statistics** menu. Additional information on the connection (**Connection**) and status (**Mode**) of the connected guests is displayed on the host.

7.8 Room capacity

The utilization of the room capacity is displayed in this menu.

This menu is only available for the host in host/guest operation.

The availability of the individual function depends on the selected user level, see "User levels", page 26.

Function	Description
Counting rate below threshold	Displayed only if **Counting rate detection** function is activated in menu **PeCo settings** . Display of whether count rate is below limit: Green = yes, red = no.
Room capacity counter	Display: Number of people in room/room capacity Green background: Warning threshold not reached Yellow background: Warning threshold exceeded Red background: Capacity limit reached/exceeded
Manually correct number of persons inside	Manually correct the Number of people in the room counter reading. Adjustment of the difference up or down. If the **Counting correction** function is deactivated, this has no effect on the values for people entering (**IN**) and people exiting (**OUT**).
Reset counts today	The counter reading can be reset via the **Reset counts** button. This concerns the values for incoming people (**IN**), outgoing people (**OUT**) and number of people in the room. All counter readings are set to 0. Exceptions: If **Initial value of persons inside** is not equal to 0, the number of people in the room is set to this value, if the **Counting correction** function is activated, the value for **IN** is also set to this value In host/guest operation: **Reset Counts** for the host also resets the guests. **Reset Counts** for the guest only resets the guest itself.

7.9 Statistics

This menu displays daily diagrams of the recorded counts for the last 10 days. Data older than 10 days is deleted.

The availability of this menu depends on the selected user level, see "User levels", page 26.

Function	Description
Select counting log file	Select tag for which the data is to be displayed.

Function	Description
Download	Download statistics data. One *.csv file per day. This contains 240 values (6-minute intervals) for the day • Time stamp • Number of IN counts within 6 minutes • Number of OUT counts within 6 minutes • Maximum number of people in the room within 6 minutes. Output value is -1 if the value for **Room capacity** is set to 0 or the device is defined as the host.

Information on diagram display:

- Gray areas: Counter was not active
- **Counts IN per 6 minutes** and **Counts OUT per 6 minutes** diagram: The count of the respective sensor is shown.
- **Number of persons inside** diagram: The count for all devices is shown (for host/guest operation). The respective maximum value within a phase of 6 minutes is specified. A vertical red line shows the counter is reset. Negative values are displayed when the room capacity for this device was not monitored (maximum set room capacity is 0 or the device is a guest).

7.10 About

Function	Description
Device	Display of the device designation.
App-Version	Display of the app version.
Firmware-Version	Display of the firmware version.
Licenses	Display of the license texts.
Device status	Display of the operating state of the device. Operating states (selection): • **StartUp**: Device in start-up phase • **Counting Mode**: Device in counting mode (**Counter active ON**) • **Configuration Mode**: Device in configuration mode (**Counter active OFF**) • **Error: Sensor is in overload. Scans discarded.** and **Warning: Sensor load is too high. Some scans discarded.**: Processing load of the device is too high. Shut-down measures: Ensure that there are no interfering objects in the Region of Interest. Reduce Region of Interest.
Download system log	Download a system report. The report contains information on errors and warnings.

7.11 Communication via REST API

Communication with the device is also possible by means of POST via REST API. REST API testing software (e.g. Postman) can be used to test the function (not a web browser).

Room capacity functions

Query of whether monitoring of the room capacity is active:

```
http://<sensor ip>/api/crown/PeopleCounter/
GetRoomCapacityActive
```

The response is false if configuration mode is activated (**Counter active OFF**) or the sensor is a guest in host/guest operation.

Query of the number of people in the room:

```
http://<sensor ip>/api/crown/PeopleCounter/
GetNumberOfPersonsInside
```

Output value is -1 if the value for **Room capacity** is set to 0 or the device is defined as a host in host/guest operation.

Query of room capacity:

```
http://<sensor ip>/api/crown/PeopleCounter/GetRoomCapacity
```

Perform reset:

```
http://<sensor ip>/api/crown/PeopleCounter/Reset
```

Change room capacity to a random value:

```
http://<sensor ip>/api/crown/PeopleCounter/SetRoomCapacity with
payload  {"args": {"roomCapacity": <new capacity>}}
```

Change number of people in room to a random value:

```
http://<sensor ip>/api/crown/PeopleCounter/
SetNumberOfPersonsInside with payload {"args": {"number": <new
number>}}
```

Increase number of people in the room by 1:

```
http://<sensor ip>/api/crown/PeopleCounter/
CorrectNumberOfPersonsInsideUp
```

Decrease number of people in the room by 1:

```
http://<sensor ip>/api/crown/PeopleCounter/
CorrectNumberOfPersonsInsideDown
```

Query of the limit value [%] for the room capacity warning

```
http://<sensor ip>/api/crown/PeopleCounter/GetWarnThreshold
```

Set limit value [%] for room capacity warning

```
http://<sensor ip>/api/crown/PeopleCounter/
SetWarnThreshold
  {"args": {"thres": <value>}}
```

You have to reload the web page to see the effect in the software interface of SOPASair.

Counting rate detection functions

Query of whether the alarm is active:

```
http://<sensor ip>/api/crown/PeopleCounter/
GetCountingRateWarningActive
```

Query of the IN count rate in the last time interval:

```
http://<sensor ip>/api/crown/PeopleCounter/
GetInCountsInTimeInterval
```

Output value is -1 if **Counting rate detection** is not activated.

Query of the OUT count rate in the last time interval:

```
http://<sensor ip>/api/crown/PeopleCounter/
GetOutCountsInTimeInterval
```

Output value is -1 if **Counting rate detection** is not activated.

General setting functions

Set sensor time:

```
http://<sensor IP>/api/crown/DateTime/setDateTime with payload
    {"args": {"year": <yyyy>, "month": <m>, "day": <d>, "hour":
<h>, "minute": <m>, "second": <s>}}
```

Query whether counter is active:

```
http://<sensor IP>/api/crown/PeopleCounter/GetCounterActive
```

Counter functions

Settings can only be queried and made on the sensor level (single device, host or guest, not via host/guest combination).

Query of person entry area (IN):

```
http://<sensor ip>/api/crown/PeopleCounter/GetCountIn
```

Query of person exit area (OUT):

```
http://<sensor ip>/api/crown/PeopleCounter/GetCountOut
```

Change number of person entry area to a random value:

```
http://<sensor ip>/api/crown/PeopleCounter/SetInitIn with
payload  {"args": {"countInitIn": <new number>}}
```

You have to reload the web page to see the effect in the software interface of SOPASair.

Change number of person exit area to a random value:

```
http://<sensor ip>/api/crown/PeopleCounter/SetInitOut with
payload  {"args": {"countInitOut": <new number>}}
```

You have to reload the web page to see the effect in the software interface of SOPASair.

Query of person entry area (IN) of all devices:

```
http://<sensor ip>/api/crown/PeopleCounter/GetCountInAllSensors
```

Query at the host in host/guest operation when sensor fusion is activated. Response is -1 if the device is not a host or sensor fusion is not active.

Query of person exit area (OUT) of all devices:

```
http://<sensor ip>/api/crown/PeopleCounter/GetCountOutAllSensors
```

Query at the host in host/guest operation when sensor fusion is activated. Response is -1 if the device is not a host or sensor fusion is not active.

About functions

Query of the operating status of the device:

```
http://<sensor ip>/api/crown/PeopleCounter/
GetCurrentDeviceStatus
```

An individual visualization can be displayed via a browser using WebSockets. An example implementation can be found at: www.sick.com/people-counter

Contamination indication functions

Query of whether the contamination indication is activated:

```
http://<sensor ip>/api/crown/PeopleCounter/
isContaminationMeasurementActive
```

Query of degree of contamination:

```
http://<sensor ip>/api/crown/PeopleCounter/
getContaminationResult
```

- Result: No contamination: `CM_DATA_NONE`
- Result: Warning: `CM_DATA_WARN`
- Result: Error: `CM_DATA_ERROR`

7.12 Service and diagnostics: Operation with SOPAS ET

Version 4.1 and higher of the SOPAS Engineering Tool (SOPAS ET) software can also be used for service and diagnostic purposes.

Execute the following functions via the SOPAS ET configuration software:

- Terminal program
- Read out error message/memory
- Install firmware updates

- Export diagnostics and system status
- Changing the IP address

NOTE
The most up-to-date version of the SOPAS ET software can be downloaded from www.sick.com/SOPAS_ET. The respective system requirements for installing SOPAS ET are also specified there.

1. Connect the communication interface (Ethernet, 4-pin M12 female connector) of the device to the computer.
2. Switch on and start the computer.
3. Supply the device with voltage (5-pin M12 male connector, supply voltage 10 ... 30 V DC).

✓ After successful initialization, the two status LEDs light up green. The device is ready for use.

NOTE
To use SOPAS ET with the device, you need a device description file (SDD, SOPAS Device Description) for this device. You can install this within SOPAS ET using the device catalog. The device description file is saved on the device and can be installed there. Alternatively, installation is possible from the SICK website (Internet connection required).

Following installation of the device description file, the device can be selected from the device catalog and added to a project.

A connection to the device is established via the communication interface. The connection must be activated for data transmission (**online**).

Certain functions (e.g., Edit parameters) require you to be logged in to the device (**Device** > **Log In** menu, **User level**: Authorized customer, **Password** (factory default): `client`).

Table 6: Passwords

User levels	Password
Maintenance personnel	`main`
Authorized client	`client`
Service	`servicelevel`

NOTE
Change the passwords during initial commissioning to protect your device.

A higher user level can change the password of a lower user level.

Information about the device is displayed in the device window and the device can also be configured here (**Device**> **Open** menu).

7.12.1 Communication in SOPAS ET via SOPAS commands

Terminal program description

The terminal program is started in the main window of SOPAS ET via the **Tools** > **Terminal** menu.

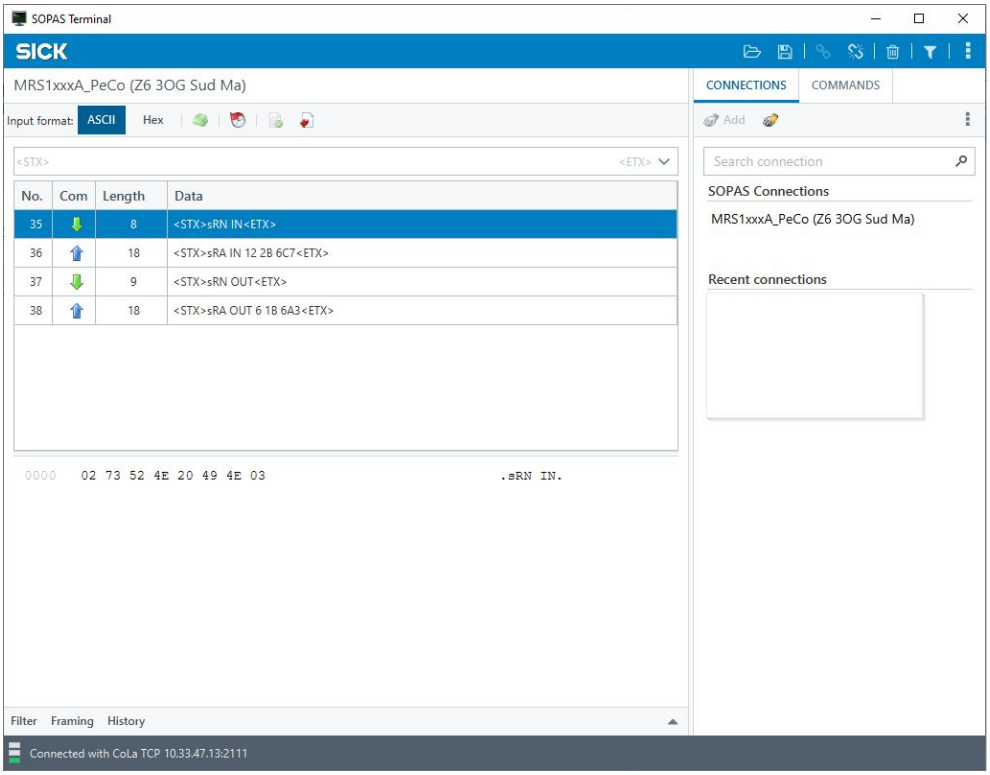

sRN IN

This parameter outputs the total value of IN counted by the device and the position and size of the last counted IN.

sRN OUT

This parameter outputs the total value of OUT counted by the device and the position and size of the last counted person OUT.

SOPAS variables

It is possible to register with the SOPAS variables as an event:

- `.sEN IN 1`
- `.sEN OUT 1`

In these cases it works like an event, i.e. every time the device registers a new person, the SOPAS variable is triggered and the IN/OUT value is updated.

8 Maintenance

8.1 Maintenance plan

During operation, the device works maintenance-free.

Depending on the assignment location, the following preventive maintenance tasks may be required for the device at regular intervals:

Table 7: Maintenance plan

Maintenance work	Interval	To be carried out by
Check device and connecting cables for damage at regular intervals.	Depends on ambient conditions and climate.	Specialist
Clean housing and optics cover.	Depends on ambient conditions and climate.	Specialist
Check the screw connections and plug connectors.	Depends on the place of use, ambient conditions or operating requirements. Recommended: At least every 6 months.	Specialist
Check that all unused connections are sealed with protective caps.	Depends on ambient conditions and climate. Recommended: At least every 6 months.	Specialist

8.2 Cleaning

NOTICE
Equipment damage due to improper cleaning.

Improper cleaning may result in equipment damage.

- Only use recommended cleaning agents and tools.
- Never use sharp objects for cleaning.

► Clean the optics cover at regular intervals and in the event of contamination with a lint-free lens cloth and plastic cleaning agent. Rinse off coarse dirt first with water. The cleaning interval essentially depends on the ambient conditions.

9 Troubleshooting

9.1 General faults, warnings, and errors

Possible faults and corrective actions are described in the table below for troubleshooting. In the case of faults that cannot be rectified using the information below, please contact SICK Service. To find your agency, see the final page of this document.

NOTE
Before calling, make a note of all type label data such as type designation, serial number, etc., to ensure faster assistance.

Table 8: Troubleshooting questions and replies

Question / status	Response / remedial actions
Measurement results are inaccurate.	Optics cover contaminated: Clean the cover. To ensure cleaning is done on time, activate contamination indication see "General settings", page 27. Detection area not correct: Check mounting position of the device and configured area in SOPASair
When calling up the sensor via a web browser, the SOPASair user interface is not loaded, the SOPASair loading screen is permanently displayed.	Try connecting again. If this does not work: Restart sensor.
Host/guest operation: A guest is not displayed in the Counter menu of the host.	IPs are not correctly configured, check inputs. Sensors are located in different sub-networks, check network settings. UDP port blocked, check network settings. Firmware versions not compatible, update all devices to latest firmware version.
The counts differ from the real values.	People are not detected correctly: Check mounting position, see "Mounting position", page 15 and check configuration, "PeCo settings", page 28 and see "Region of interest settings", page 30. Particularly in small rooms with a large number of people entering and exiting, larger absolute deviations can occur despite high percentage counting accuracy: In the event of low occupancy, perform a manual count and correction and/or use the **Daily Reset** and **Counting correction** functions, see "PeCo settings", page 28.
Other fault, warning or error arises.	Call up diagnostic information in SOPAS ET.

9.2 Repairs

Repair work on the device may only be performed by qualified and authorized personnel from SICK AG. Interruptions or modifications to the device by the customer will invalidate any warranty claims against SICK AG.

9.3 Returns

- Only send in devices after consulting with SICK Service.
- The device must be sent in the original packaging or an equivalent padded packaging.

NOTE

To enable efficient processing and allow us to determine the cause quickly, please include the following when making a return:

- Details of the contact person
- Description of the application
- Description of the fault that occurred

9.4 Disposal

If a device can no longer be used, dispose of it in an environmentally friendly manner in accordance with the applicable country-specific waste disposal regulations. Do not dispose of the product along with household waste.

NOTICE

Danger to the environment due to improper disposal of the device.

Disposing of devices improperly may cause damage to the environment.

Therefore, observe the following information:

- Always observe the national regulations on environmental protection.
- Separate the recyclable materials by type and place them in recycling containers.

10 Technical data

NOTE

The relevant online product page for your product, including technical data, dimensional drawing, and connection diagrams, can be downloaded, saved, and printed from the Internet.

The product page can be accessed via the **SICK Product ID: pid.sick.com/{P/N}/{S/N}**

{P/N} corresponds to the part number of the product, see type label.

{S/N} corresponds to the serial number of the product, see type label (if indicated).

Please note: This documentation may contain further technical data.

10.1 Features

Application	Indoor/outdoor
Light source	Infrared (wavelength 850 nm, max. output power 1.26 W, pulse duration 3.5 ns, average power 4.0 mW)
Laser class	Laser class 1 (EN 60825-1:2014+A11:2021, IEC 60825-1:2014, EN/IEC 60825-1:2007) Complies with 21 CFR 1040.10 and 1040.11 except for conformance with IEC 60825-1 Ed. 3 as described in Laser Notice No. 56, dated May 8, 2019.
Horizontal aperture angle	275°
Vertical aperture angle	7.5° (over 4 measurement levels)
Scan field flatness	Conical error: ± 0.6° Tilt: ± 0.6°
Scanning frequency	50 Hz, 4x 12.5 Hz
Angular resolution	0.25°
Heating	self-heating
Working range	0.3 m ... 10.00 m (typical)
Spot size	10.4 mrad x 8.7 mrad

10.2 Mechanics/electronics

Connection type	3 x M12-Rundsteckverbindungen mit drehbarer Steckereinheit
Supply voltage	10 V DC ... 30 V DC [1)]
Permissible residual ripple	±5%
Power consumption	P_{typ} = 13 W P_{start} = 30 W for 5 s (motor start-up) P_{max} = 37 W (with full specified current at all outputs)
Housing	ALSi12 Optics cover: PC
Housing color	Gray (RAL 7042)
Enclosure rating	IP65 (IEC 60529:1989+AMD1:1999+AMD2:2013) IP67 (IEC 60529:1989+AMD1:1999+AMD2:2013)
Protection class	III (IEC 61140:2016-11)
Electrical safety	IEC 61010-1:2010-06
Weight	1.2 kg
Dimensions (L x W x H)	151.9 mm x 150 mm x 92.5 mm

Maximum output current	max. 100 mA pro Ausgang [2]

1) Die externe Spannungsversorgung muss gemäß EN 60204 einen kurzzeitigen Netzausfall von 20 ms überbrücken. Der absolute Spannungspegel darf nicht unter die spezifizierte Mindestspannung absinken. Geeignete Netzteile sind bei SICK als Zubehör erhältlich.

2) z. B. 30 V*100 mA = 3 W

10.3 Dimensioned drawing

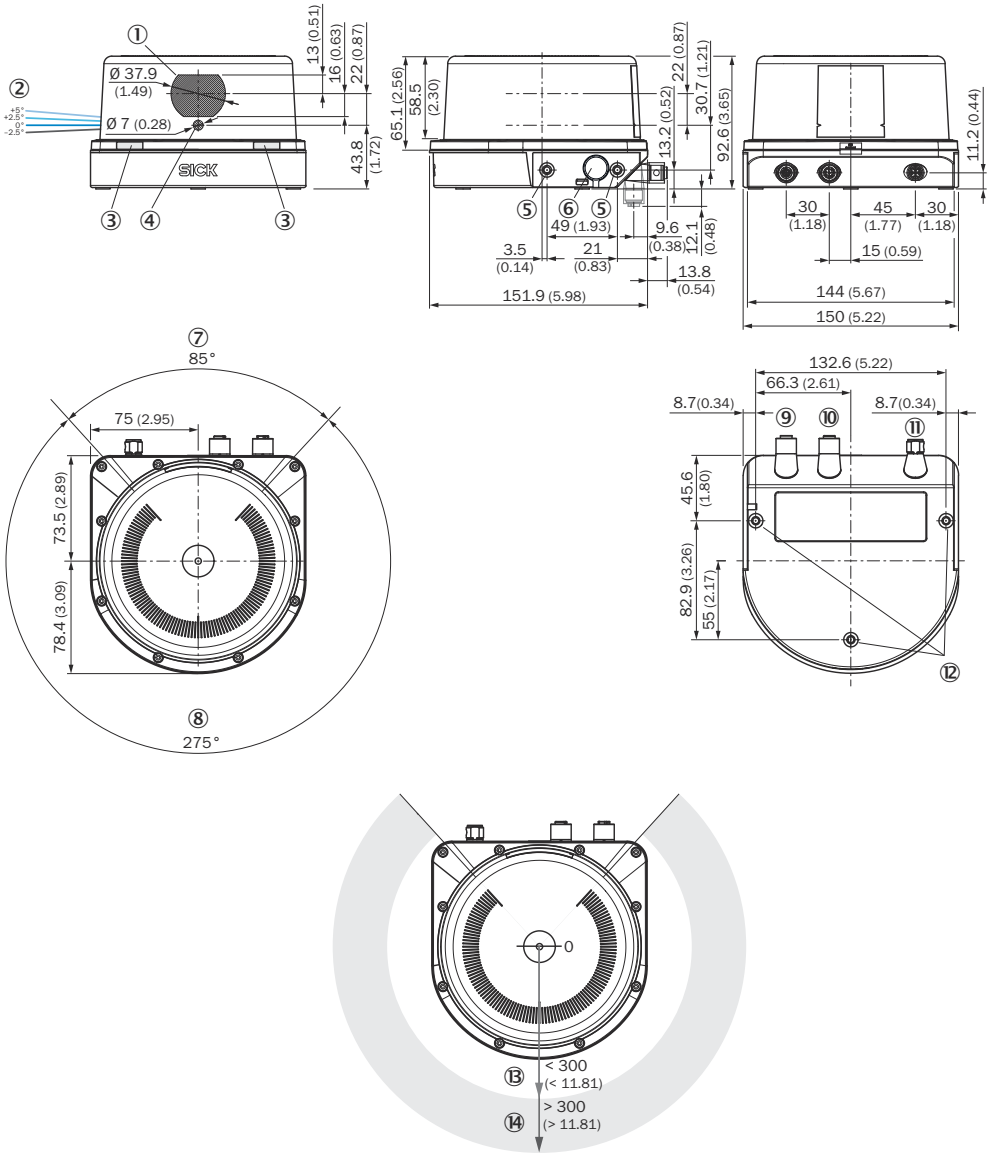

Figure 15: MRS1000 PeopleCounter device structure and dimensions, dimensions in mm (inch)

① Receiver
② Laser aperture angle scan planes 1 to 4
③ Status LEDs
④ Sender
⑤ M5x7.5 fixing holes
⑥ Pressure compensation element
⑦ Blind spot
⑧ Field of view
⑨ Ethernet connection
⑩ I/O connection
⑪ PWR connection (supply voltage)
⑫ M5x7.5 fixing holes
⑬ Close range (no detection or measurement possible)
⑭ Detection zone

10.4 Performance

Scan/frame rate	55000 ... 165000 measuring points/second
Systematic error	± 60 mm Temperature drift: typically ± 0.5 mm/K
Statistical error	≤ 30 mm
Integrated application	Person counting
Counting accuracy	Typically > 98%
$MTTF_D$	> 100 years

10.5 Interfaces

Ethernet	✓, TCP/IP, UDP/IP Function: HOST, NTP Data transmission rate: 10/100 Mbit/s
digital inputs/outputs	I/O (8 (multiport))
Configuration software	SOPASair, SOPAS ET (error analysis)

10.6 Ambient data

Remission factor	2% ... > 1,000% (reflector)
Electromagnetic compatibility (EMC)	EN 61000-6-2:2005 EN 61000-6-3:2007+A1:2011
Vibration resistance	According to IEC 60068-2-6:2007-12: 10 Hz ... 150 Hz: amplitude 0.35 mm to 5 g, 20 cycles
Shock resistance	Single shock according to IEC 60068-2-27:2008-02: 15 g, 11 ms, 6 shocks per axis Continuous shock according to IEC 60068-2-27:2008-02: 10 g, 16 ms, 1000 shocks per axis
Harmful gas resistance	Test for determining the resistance to flowing mixed gas according to DIN EN 60068–2–60:2016–06, Ke test, method 1
Chemical resistance	Salt spray test: DIN EN IEC 60068-2-52 (2018/08), test method 4
Ambient operating temperature	-30 °C ... +50 °C
Storage temperature	-40 °C ... +75 °C
Operating and storage air humidity	Max 90% air humidity (non-condensing)
Ambient light immunity	80 klx

11 Accessories

NOTE

On the product page you will find accessories and, if applicable, related installation information for your product.

The product page can be accessed via the **SICK Product ID**: **pid.sick.com/{P/N}/{S/N}**

{P/N} corresponds to the part number of the product, see type label.

{S/N} corresponds to the serial number of the product, see type label (if indicated).

Support Portal

NOTE

In the SICK Support Portal (support.sick.com) you will find, besides useful service and support information for your product, further detailed information on the available accessories and their use.

12 Annex

12.1 Declarations of conformity and certificates

You can download declarations of conformity and certificates via the product page.

The product page can be accessed via the **SICK Product ID: pid.sick.com/{P/N}/{S/N}**

{P/N} corresponds to the part number of the product, see type label.

{S/N} corresponds to the serial number of the product, see type label (if indicated).

12.2 Licenses

SICK uses open source software which is published by the rights holders under a free license. Among others, the following license types are used: GNU General Public License (GPL version 2, GPL version 3), GNU Lesser General Public License (LGPL), MIT license, zlib license and licenses derived from the BSD license.

This program is provided for general use without warranty of any kind. This warranty disclaimer also extends to the implicit assurance of marketability or suitability of the program for a particular purpose.

More details can be found in the GNU General Public License.

For license texts see www.sick.com/licensetexts.

Printed copies of the license texts are also available on request.

8025783/1PC3/2024-09-25/en

Australia
Phone +61 (3) 9457 0600
1800 33 48 02 – tollfree
E-Mail sales@sick.com.au

Austria
Phone +43 (0) 2236 62288-0
E-Mail office@sick.at

Belgium/Luxembourg
Phone +32 (0) 2 466 55 66
E-Mail info@sick.be

Brazil
Phone +55 11 3215-4900
E-Mail comercial@sick.com.br

Canada
Phone +1 905.771.1444
E-Mail cs.canada@sick.com

Czech Republic
Phone +420 234 719 500
E-Mail sick@sick.cz

Chile
Phone +56 (2) 2274 7430
E-Mail chile@sick.com

China
Phone +86 20 2882 3600
E-Mail info.china@sick.net.cn

Denmark
Phone +45 45 82 64 00
E-Mail sick@sick.dk

Finland
Phone +358-9-25 15 800
E-Mail sick@sick.fi

France
Phone +33 1 64 62 35 00
E-Mail info@sick.fr

Germany
Phone +49 (0) 2 11 53 010
E-Mail info@sick.de

Greece
Phone +30 210 6825100
E-Mail office@sick.com.gr

Hong Kong
Phone +852 2153 6300
E-Mail ghk@sick.com.hk

Hungary
Phone +36 1 371 2680
E-Mail ertekesites@sick.hu

India
Phone +91-22-6119 8900
E-Mail info@sick-india.com

Israel
Phone +972 97110 11
E-Mail info@sick-sensors.com

Italy
Phone +39 02 27 43 41
E-Mail info@sick.it

Japan
Phone +81 3 5309 2112
E-Mail support@sick.jp

Malaysia
Phone +603-8080 7425
E-Mail enquiry.my@sick.com

Mexico
Phone +52 (472) 748 9451
E-Mail mexico@sick.com

Netherlands
Phone +31 (0) 30 204 40 00
E-Mail info@sick.nl

New Zealand
Phone +64 9 415 0459
0800 222 278 – tollfree
E-Mail sales@sick.co.nz

Norway
Phone +47 67 81 50 00
E-Mail sick@sick.no

Poland
Phone +48 22 539 41 00
E-Mail info@sick.pl

Romania
Phone +40 356-17 11 20
E-Mail office@sick.ro

Singapore
Phone +65 6744 3732
E-Mail sales.gsg@sick.com

Slovakia
Phone +421 482 901 201
E-Mail mail@sick-sk.sk

Slovenia
Phone +386 591 78849
E-Mail office@sick.si

South Africa
Phone +27 10 060 0550
E-Mail info@sickautomation.co.za

South Korea
Phone +82 2 786 6321/4
E-Mail infokorea@sick.com

Spain
Phone +34 93 480 31 00
E-Mail info@sick.es

Sweden
Phone +46 10 110 10 00
E-Mail info@sick.se

Switzerland
Phone +41 41 619 29 39
E-Mail contact@sick.ch

Taiwan
Phone +886-2-2375-6288
E-Mail sales@sick.com.tw

Thailand
Phone +66 2 645 0009
E-Mail marcom.th@sick.com

Turkey
Phone +90 (216) 528 50 00
E-Mail info@sick.com.tr

United Arab Emirates
Phone +971 (0) 4 88 65 878
E-Mail contact@sick.ae

United Kingdom
Phone +44 (0)17278 31121
E-Mail info@sick.co.uk

USA
Phone +1 800.325.7425
E-Mail info@sick.com

Vietnam
Phone +65 6744 3732
E-Mail sales.gsg@sick.com

Detailed addresses and further locations at **www.sick.com**

SICK AG | Waldkirch | Germany | www.sick.com

SICK
Sensor Intelligence.