OPERATING INSTRUCTIONS

KTS Core

Contrast sensor

4-PIN EasyTeach 2P LED WHITE

SICK
Sensor Intelligence.

Described product

KTS Core EasyTeach 4-PIN LED WHITE

Manufacturer

SICK AG
Erwin-Sick-Str. 1
79183 Waldkirch
Germany

Legal information

This work is protected by copyright. Any rights derived from the copyright shall be reserved for SICK AG. Reproduction of this document or parts of this document is only permissible within the limits of the legal determination of Copyright Law. Any modification, abridgment or translation of this document is prohibited without the express written permission of SICK AG.

The trademarks stated in this document are the property of their respective owner.

© SICK AG. All rights reserved.

Original document

This document is an original document of SICK AG.

Contents

1 About this document 5
1.1 Information on the operating instructions 5
1.2 Scope 5
1.3 Explanation of symbols 5
1.4 Further information 6
1.5 Customer service 6

2 Safety information 7
2.1 Intended use 7
2.2 Improper use 7
2.3 Limitation of liability 7
2.4 Requirements for skilled persons and operating personnel 8
2.5 Hazard warnings and operational safety 8
2.6 Repair 8

3 Product description 9
3.1 Product ID 9
3.2 Product features and functions 10

4 Mounting 12
4.1 Scope of delivery 12
4.2 Mounting requirements 12
4.3 Mounting the device 12

5 Electrical installation 14
5.1 Notes on the electrical installation 14
5.2 Note on the swivel connector 15
5.3 Pin assignment of the connections 15
5.4 Connecting the supply voltage 15
5.5 Wiring the interfaces 15

6 Commissioning 18

7 Operation 20
7.1 Operating elements 20
7.2 Activating or deactivating the pushbutton lock 20
7.3 Defaults 20
7.4 Other indicators and functions 22

8 Troubleshooting 23
8.1 Possible errors during commissioning 23
8.2 Possible errors during operation 23

9 Maintenance 24
9.1 Maintenance 24

9.2 Cleaning the device 24

10 Decommissioning 26

10.1 Disassembly and disposal 26

10.2 Returning devices 26

11 Technical data 27

11.1 General data 27

11.2 Dimensional drawings 28

12 Accessories 31

13 Annex 32

13.1 EU declaration of conformity and certificates 32

13.2 Certification according to UL 60947-5-2 32

13.3 Licenses 32

1 About this document

1.1 Information on the operating instructions

These operating instructions provide important information on how to use devices from SICK AG.

Prerequisites for safe work are:

- Compliance with all safety notes and handling instructions supplied
- Compliance with local work safety regulations and general safety regulations for device applications

The operating instructions are intended to be used by qualified personnel and electrical specialists.

NOTE
Read these operating instructions carefully before starting any work on the device, in order to familiarize yourself with the device and its functions.

The instructions constitute an integral part of the product and are to be stored in the immediate vicinity of the device so they remain accessible to staff at all times. Should the device be passed on to a third party, these operating instructions should be handed over with it.

These operating instructions do not provide information on operating the machine in which the device is integrated. For information about this, refer to the operating instructions of the specific machine.

1.2 Scope

These operating instructions serve to incorporate the device into a customer system. Instructions are given by stages for all actions required.

These instructions apply to all listed device variants of the product.

Available device variants are listed on the online product page.

► www.sick.com/KTS
► www.sick.com/KTX

Commissioning is described using one particular device variant as an example.

Simplified device designation in the document

In the following, the sensor is referred to in simplified form as “KTS/KTX” or “device.”

1.3 Explanation of symbols

Warnings and important information in this document are labeled with symbols. The warnings are introduced by signal words that indicate the extent of the danger. These warnings must be observed at all times and care must be taken to avoid accidents, personal injury, and material damage.

DANGER
... indicates a situation of imminent danger, which will lead to a fatality or serious injuries if not prevented.

WARNING
... indicates a potentially dangerous situation, which may lead to a fatality or serious injuries if not prevented.

CAUTION
... indicates a potentially dangerous situation, which may lead to minor/slight injuries if not prevented.

NOTICE
... indicates a potentially harmful situation, which may lead to material damage if not prevented.

NOTE
... highlights useful tips and recommendations as well as information for efficient and trouble-free operation.

1.4 Further information

NOTE
All the documentation available for the device can be found on the online product page at:

- ► www.sick.com/KTS
- ► www.sick.com/KTX

The following information is available for download there:

- Type-specific online data sheets for device variants, containing technical data and dimensional drawings
- EU declaration of conformity for the product family
- Dimensional drawings and 3D CAD dimension models in various electronic formats
- These operating instructions, available in English and German, and in other languages if necessary
- Other publications related to the sensors described here

1.5 Customer service

If you require any technical information, our customer service department will be happy to help. To find your agency, see the final page of this document.

NOTE
Before calling, make a note of all type label data such as type code, serial number, etc., to ensure faster processing.

2 Safety information

2.1 Intended use

The KTS/KTX contrast sensor is an opto-electronic sensor for the optical, non-contact detection of contrasts.

A contrast sensor is designed for mounting and may only be operated according to its intended function. For this reason, it is not equipped with direct safety devices.

The system designer must provide measures to ensure the safety of persons and systems in accordance with the legal guidelines.

SICK AG assumes no liability for losses or damage arising from the use of the product, either directly or indirectly. This applies in particular to use of the product that does not conform to its intended purpose and is not described in this documentation.

2.2 Improper use

- The device does not constitute a safety-relevant device according to the EC Machinery Directive (2006/42/EC).
- The device must not be used in explosion-hazardous areas.
- Any other use that is not described as intended use is prohibited.
- Any use of accessories not specifically approved by SICK AG is at your own risk.

The device is not suitable for the following applications (this list is not exhaustive):

- As a safety device to protect persons, their hands, or other body parts
- Underwater
- In explosion-hazardous areas
- Outdoors, without additional protection

NOTICE

Danger due to improper use!

Any improper use can result in dangerous situations.

Therefore, observe the following information:

► The device should be used only in line with intended use specifications.
► All information in these operating instructions must be strictly complied with.

2.3 Limitation of liability

Applicable standards and regulations, the latest state of technological development, and our many years of knowledge and experience have all been taken into account when assembling the data and information contained in these operating instructions. The manufacturer accepts no liability for damage caused by:

- Failure to observe the operating instructions
- Improper use
- Use by untrained personnel
- Unauthorized conversions
- Technical modifications
- Use of unauthorized spare parts, wear and tear parts, and accessories

With special variants, where optional extras have been ordered, or owing to the latest technical changes, the actual scope of delivery may vary from the features and illustrations shown here.

2.4 Requirements for skilled persons and operating personnel

WARNING
Risk of injury due to insufficient training!

Improper handling of the device may result in considerable personal injury and material damage.

- All work must only ever be carried out by the stipulated persons.

The operating instructions state the following qualification requirements for the various areas of work:

- **Instructed personnel** have been briefed by the operating entity about the tasks assigned to them and about potential dangers arising from improper action.
- **Skilled personnel** have the specialist training, skills, and experience, as well as knowledge of the relevant regulations, to be able to perform tasks assigned to them and to detect and avoid any potential dangers independently.
- **Electricians** have the specialist training, skills, and experience, as well as knowledge of the relevant standards and provisions to be able to carry out work on electrical systems and to detect and avoid any potential dangers independently. In Germany, electricians must meet the specifications of the DGUV V3 Work Safety Regulations (e.g., Master Electrician). Other relevant regulations applicable in other countries must be observed.

The following qualifications are required for various activities:

Activities	Qualification
Mounting, maintenance	▪ Basic practical technical training ▪ Knowledge of the current safety regulations in the workplace
Electrical installation, device replacement	▪ Practical electrical training ▪ Knowledge of current electrical safety regulations ▪ Knowledge of the operation and control of the devices in their particular application
Commissioning, configuration	▪ Basic knowledge of the design and setup of the described connections and interfaces ▪ Basic knowledge of data transmission ▪ Knowledge of the operation and control of the devices in their particular application
Operation of the devices in their particular application	▪ Knowledge of the operation and control of the devices in their particular application ▪ Knowledge of the software and hardware environment in the application

2.5 Hazard warnings and operational safety

Please observe the safety notes and the warnings listed here and in other chapters of these operating instructions to reduce the possibility of risks to health and avoid dangerous situations.

2.6 Repair

The product is replaced if defective. The device is not intended to be repaired. Interference with or modifications to the device on the part of the customer will invalidate any warranty claims against SICK AG.

3 Product description

3.1 Product ID

3.1.1 Product identification via the SICK product ID

SICK product ID

The SICK product ID uniquely identifies the product. It also serves as the address of the web page with information on the product.

The SICK product ID comprises the host name pid.sick.com, the part number (P/N), and the serial number (S/N), each separated by a forward slash.

For many products, the SICK product ID is displayed as text and QR code on the type label and/or on the packaging.

Figure 1: SICK product ID

3.1.2 Type code

1	2	-	3	4	5	6	7	8	9	10	11	12	13
KT	S		M	B	4	1	1	4	1	1	4	2	Z

Position	Meaning	
1	Basic type	KT = contrast sensor
2	Form factor/housing size	S = small
3	Light sender	M = White
4	Switching output	B = push/pull N = NPN
5	Function	4 = 2-point teach-in
6	Light spot direction	1 = longitudinal
7	Sensing distance	1 = sensing distance 13 mm
8	Filtering	4 = no filter
9	Light emission	1 = long side
10	Operation	1 = long side
11	Connection type	4 = M12, male connector, 4-pin
12	Communication	0 = special 2 = no communication A = IO-Link I = analog output (current) U = analog output (voltage) 9 = analog output (voltage) and analog input (voltage) T = serial interface (TetraPak)

Position	Meaning	
13	Device type	M = sample device S = special device F = private label A = automation function B = special device with automation function C = reserved Z = standard

3.2 Product features and functions

3.2.1 Device view

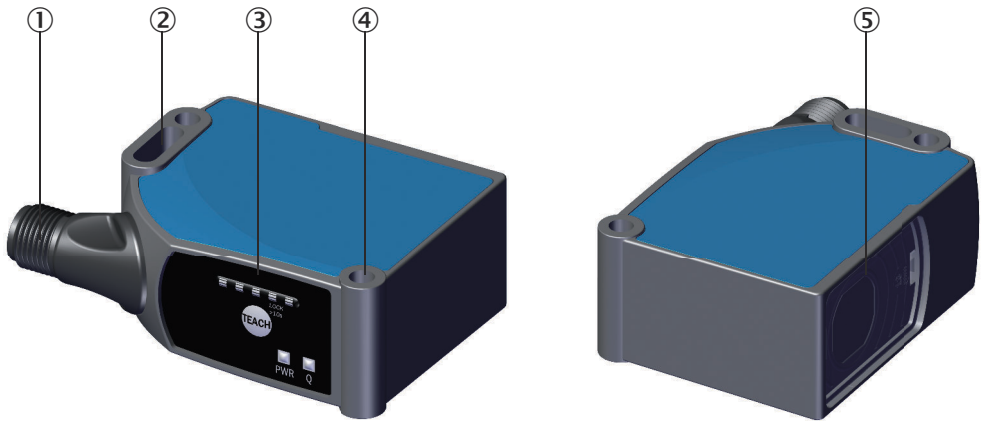

Figure 2: KTS Core EasyTeach

① Connection
② Mounting slot
③ Display
④ Fixing hole
⑤ Light emission

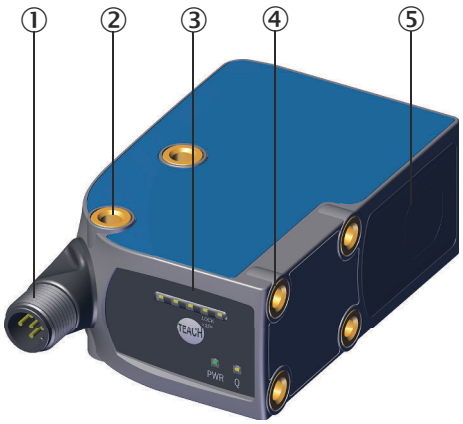

Figure 3: KTX Core EasyTeach light emission long housing side

① Connection
② M5 threaded mounting hole
③ Display
④ M5 threaded mounting hole
⑤ Light emission

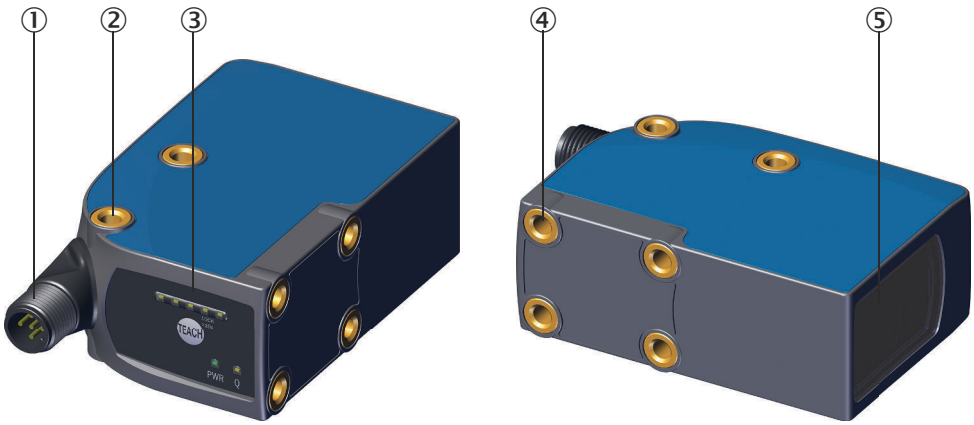

Figure 4: KTX Core EasyTeach light emission short housing side

① Connection
② M5 threaded mounting hole
③ Display
④ M5 threaded mounting hole
⑤ Light emission

3.2.2 Product characteristics

Contrast sensors are primarily used in packaging or printing machines for detecting marks.

However, they can also be used in any application based on making a distinction between contrasts.

KTS contrast sensors detect even the smallest contrasts at the highest speeds, such as print marks on foils or packaging. They detect minute grayscale variations between the mark and the background on matte, shiny, or transparent surfaces. Device types are available with different methods of contrast resolution and different teach-in variants for a wide range of requirements.

Features

- WHITE LED
- High grayscale resolution
- Very large dynamic range means reliable detection of contrasts on glossy materials
- 12,5 kHz switching frequency
- Display for easy sensor adjustment
- 2-point teach-in

Fields of application

- Applications in which contrast is a basic distinguishing feature
- Print mark detection for controlling the cutting process
- Print control in the print and paper industry
- Positioning of tubes when filling
- Label alignment on bottles
- Monitoring of wafer surfaces
- Roll end monitoring

4 Mounting

4.1 Scope of delivery

- Contrast sensor in the version ordered
- Quickstart
- Safety notes

4.2 Mounting requirements

- Typical space requirement for the device, see type-specific dimensional drawing, see "Technical data", page 27.
- Comply with technical data, such as the permitted ambient conditions for operation of the device (e.g., temperature range, EMC interference emissions, ground potential).
- To prevent condensation, avoid exposing the device to rapid changes in temperature.
- Protect the device from direct sunlight.
- The device must only be mounted using the pairs of mounting threads/fixing holes provided for this purpose.
- Shock and vibration-free mounting.

4.3 Mounting the device

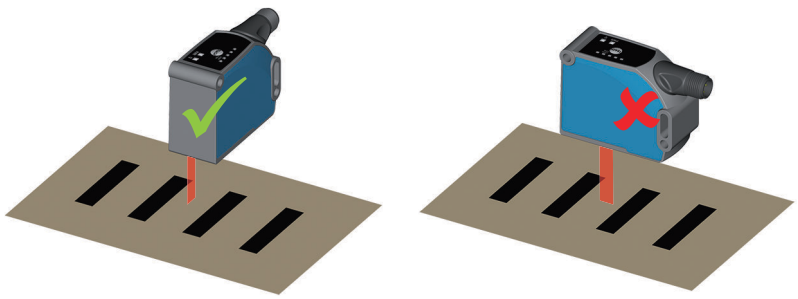

Figure 5: KTS Core EasyTeach

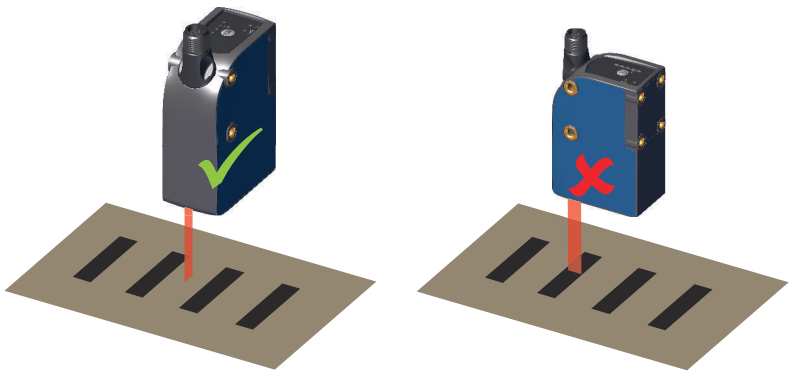

Figure 6: KTX Core EasyTeach

1. Install the sensor via the fixing hole so that the light spot enters the mark longitudinally and the test object has the least possible vertical and horizontal movement. Note the sensing distance while doing so.
2. Compensate for the vertical and horizontal movement of the test object by marks of suitable lengths.
3. Ensure that any sensor movement does not affect the sensing distance.

To secure a stable detection when having high gloss material a tilt angle of 10°-15° might be necessary.

5 Electrical installation

5.1 Notes on the electrical installation

NOTICE
Device damage due to incorrect supply voltage!

An incorrect supply voltage may result in damage to the device.

- Only operate the device with safety/protective extra-low voltage (SELV/PELV).
- III The sensor is a device of protection class III.

NOTICE
Device damage due to incorrect supply voltage!

An incorrect supply voltage may result in damage to the device.

- Only operate the device with an LPS (limited power source) in accordance with IEC 62368-1 or an NEC Class 2 power supply unit.

NOTICE
Device damage or unpredictable operation due to working with live parts!

Working with live parts may result in unpredictable operation.

- Only carry out wiring work when the power is off.
- Only connect and disconnect electrical connections when the power is off.

- **The electrical installation must only be performed by electrically qualified personnel.**
- **Standard safety requirements must be met when working on electrical systems!**
- Only switch on the supply voltage for the device when the connection tasks have been completed and the wiring has been thoroughly checked.
- When using extension cables with open ends, ensure that bare wire ends do not come into contact with each other (risk of short-circuit when supply voltage is switched on!). Wires must be appropriately insulated from each other.
- Wire cross-sections in the supply cable from the user's power system must be selected in accordance with the applicable standards.
- Only operate the device with an LPS (limited power source) in accordance with IEC 62368-1 or an NEC Class 2 power supply unit.
- All circuits connected to the device must be designed as SELV/PELV circuits.

The IP enclosure rating for the device is only achieved under the following conditions:

- The cables plugged into the connections are screwed tight with the correct tightening torque.

If these instructions are not complied with, the IP enclosure rating for the device is not guaranteed!

5.2 Note on the swivel connector

NOTICE
Damage to the connector unit from over-tightening!

The connector unit on the device has two opposite end positions.

- Do not rotate the connector unit from either of the two end positions by more than 270°.

5.3 Pin assignment of the connections

Overview of pin assignment

Table 1: M12 male connector, 4-pin

	2-P
1	L+
2	ET
3	M
4	Q

Legend

L+ = supply voltage

ET = external teach-in

M = ground

Q = switching output

5.4 Connecting the supply voltage

NOTICE
Risk of damage to the device!

The device can become damaged if it is connected to a voltage supply that is already switched on.

- Only connect the device when the supply cable is de-energized.

The device must be connected to a power supply unit with the following properties:

- Supply voltage DC 10,8 V – 28,8 V (SELV/PELV as per currently valid standards)
- Electricity source with at least 4 W power

To ensure protection against short-circuits/overload in the customer's supply cables, the wire cross-sections used must be appropriately selected and protected.

5.5 Wiring the interfaces

5.5.1 Wiring the digital inputs

The digital inputs can be used to start a teach-in procedure or a device operating mode.

The number of digital inputs available at the connections will vary, depending on the device, see "Pin assignment of the connections", page 15.

Voltage level at the input starts the corresponding function of the device.

Input, teach-in (ET)

PNP and push/pull: Teach = HIGH; RUN = LOW

NPN: Teach = LOW; RUN = HIGH

5.5.2 Wiring the digital outputs

The physical digital outputs can be allocated with various functions for the output of the result status. If the allocated event occurs in the read process, then the corresponding digital output is live.

The number of digital outputs available at the connections will vary, depending on the device, see "Pin assignment of the connections", page 15.

In each case, the digital outputs are short-circuit protected.

Switching behavior: push/pull

Electrical values

Push/pull HIGH: U_V −3 V; LOW: ≤ 3 V

In the case of a push/pull sensor, the signal must be inverted in the control system in order to obtain the same result as a sensor with NPN switching behavior.

Table 2: Push-Pull

	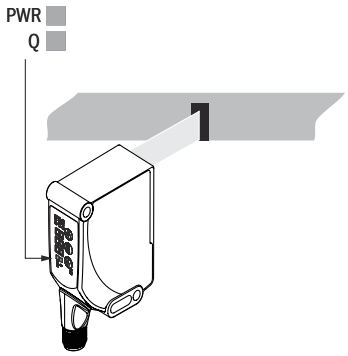	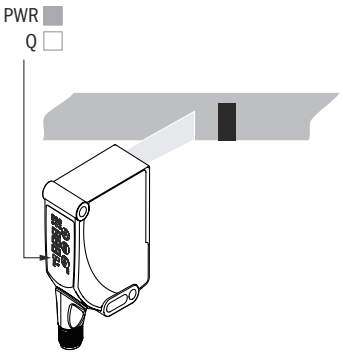
Q push-pull (≤ 100 mA)	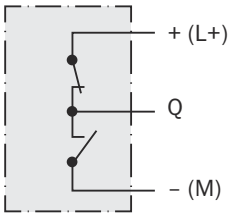	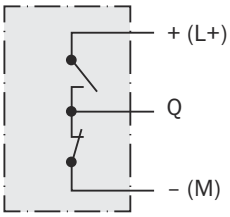

Table 3: NPN

	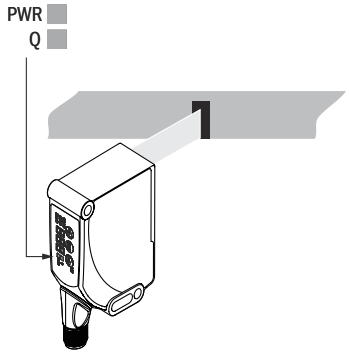	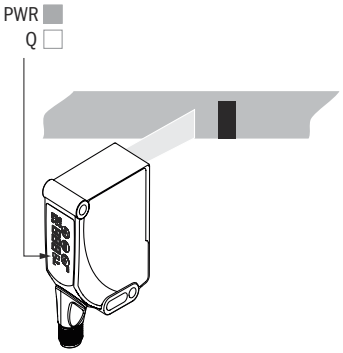
Q NPN (≤ 100 mA)	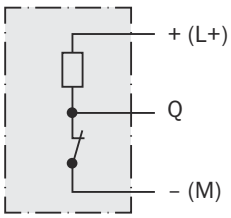	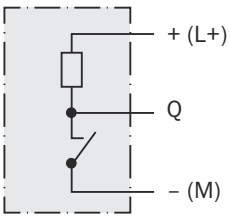

6 Commissioning

Carry out the following steps based on the example of the 2P teach:

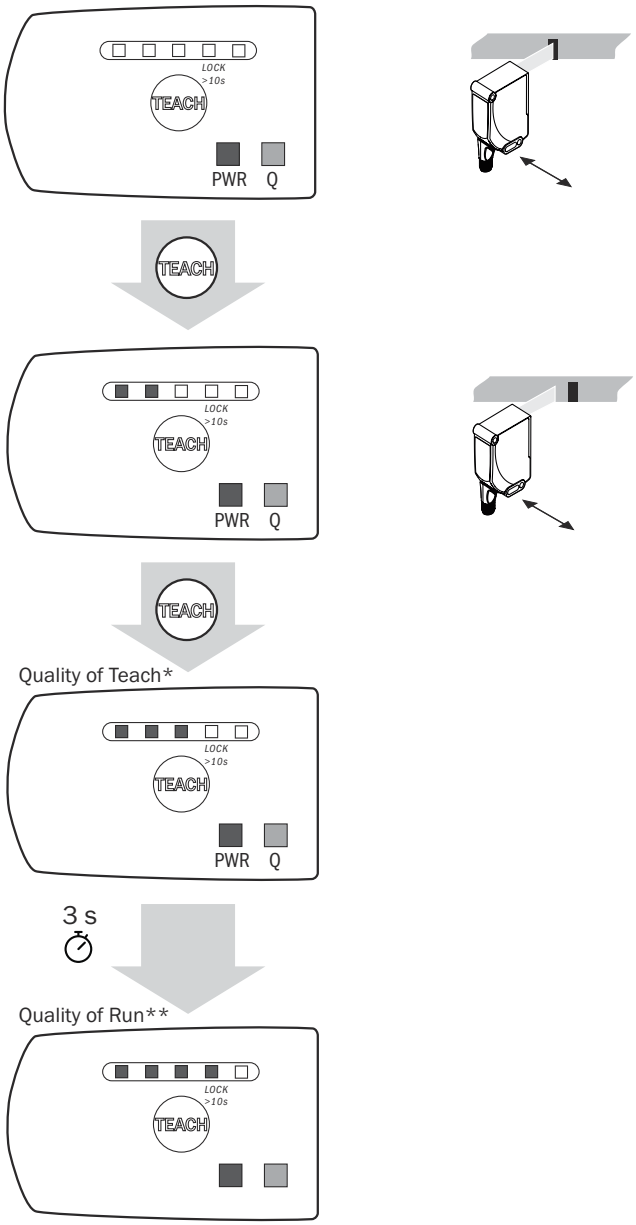

Quality of Teach*

Table 4: Quality of Teach indicator

Indication	Meaning
■ ■ ■ ■ ■	Excellent detection reliability
■ ■ ■ □ □	Good detection reliability
■ □ □ □ □	Poor detection reliability

Quality of Run**

Table 5: Quality of Run indicator

Indication	Meaning
	☺
	😐
	☹

7 Operation

7.1 Operating elements

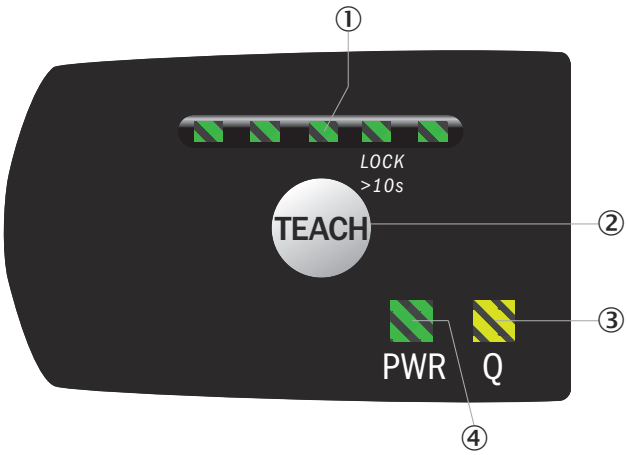

Figure 7: KTS/KTX Core EasyTeach operating elements

Table 6: Operating elements legend

Number	Description	Operating elements
1	Bar graph	Indicates qualities in five stages (Quality of Run/Quality of Teach). Status indicator in several functions.
2	TEACH pushbutton	Confirms entries.
3	Q	Illuminates when there is a switching event. Flashes when various menu functions are executed.
4	PWR	Illuminates when the voltage supply is connected.

7.2 Activating or deactivating the pushbutton lock

1. Press and hold TEACH for 10 seconds.

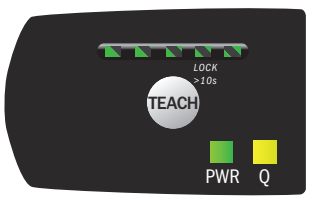

2. The pushbutton lock is active or deactivated.

7.3 Defaults

The defaults specify the parameters required for operating the device. It is often the case that only these parameters need to be set in order to use the device.

7.3.1 Teach-in

The following teach-in process is available for configuring the device:

- 2-point teach-in

7.3.1.1 2-point teach-in (factory setting)

Suitable for manual positioning of the object to be detected, e.g., mark and background. The switching logic (light or dark switching) is detected automatically by the sensor.

1. Position the mark under the light spot.
2. Confirm with TEACH.

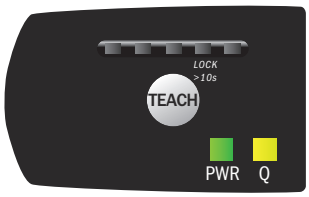

3. Position the background under the light spot.
4. Confirm with TEACH.

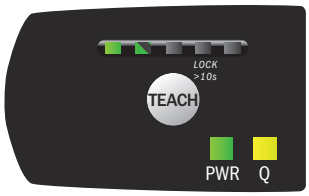

5. The Quality of Teach is displayed.

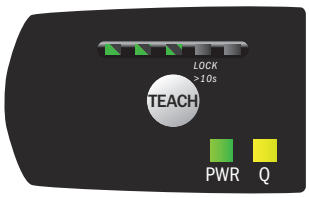

Quality of Teach

Table 7: Quality of Teach indicator

Indication	Meaning
■ ■ ■ ■ ■	Excellent detection reliability
■ ■ ■ □ □	Good detection reliability
■ □ □ □ □	Poor detection reliability

7.3.2 External teach-in

7.3.2.1 2-point teach-in

Suitable for manual positioning of the object to be detected, e.g., mark and background.

1. Position the mark under the light spot.
2. Activate teach-in via the control cable (ET).
3. Position the background under the light spot.
4. Activate teach-in via the control cable (ET).
5. The teach-in process is complete.

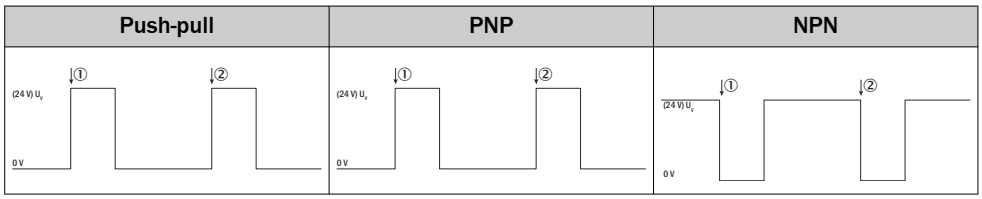

① 1. Teach point
② 2. Teach point

7.4 Other indicators and functions

Short-circuit and overcurrent detection

In the event of a short-circuit or an overcurrent, all LEDs of the bar graph and the Q LED flash.

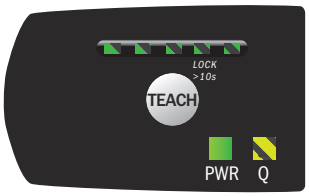

Teaching failure

In the event of a teach-in failure, all LEDs of the bar graph and the Q LED flash.

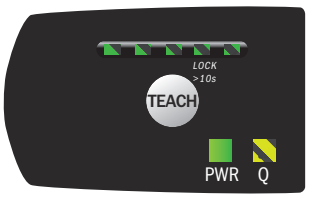

Standby bar graph

NOTE
Standby mode is not activated when a teach-in process is ongoing or while an error message is displayed.

If no settings are made on the device for 5 minutes, standby mode is activated to save electricity. Any settings made which have not been confirmed are not adopted.

To quit standby mode, one of the operating keys must be pushed.

8 Troubleshooting

8.1 Possible errors during commissioning

Table 8: Troubleshooting during commissioning

Display, error situation	Cause	Measure
• Bar graph display (green) flashes • Q LED (yellow) flashes	Short-circuit message/overcurrent message: Sensor is not connected properly	• Disconnect sensor from the power network • Check pin assignment • Reconnect sensor • Check current at the switching output
After the teach process • Q LED (yellow) flashes • Bar graph display (green) flashes and • No switching output for object detection	Programmed contrast or contrast difference is not sufficient for stable contrast detection	• Clean sensor • Readjust sensor • Check the application conditions • Restart teach process
• When the teach button is pressed, the entire bar graph flashes twice. • Teach is not carried out.	Key lock active	Deactivate key lock

8.2 Possible errors during operation

Table 9: Troubleshooting during operation

Display, error situation	Cause	Measure
No switching output any more	• Distance or angle to material not consistent • Light emission (optics) is dirty • Manual switching threshold set incorrectly	• Clean sensor • Readjust sensor • Check parameter settings • Perform teach process again

9 Maintenance

9.1 Maintenance

During operation, the device works maintenance-free.

Depending on the assignment location, the following preventive maintenance tasks may be required for the device at regular intervals:

Table 10: Maintenance schedule

Maintenance work	Interval	Implementation
Clean housing and front screen	Cleaning interval depends on ambient conditions and climate	Specialist
Check screw connections and plug connectors	Every 6 months	Specialist

9.2 Cleaning the device

At regular intervals (e.g., weekly), check the light emission window and the housing of the device for dirt. This is especially relevant in harsh operating environments (dust, abrasion, damp, fingerprints, etc.). The lens of the light emission window must be kept clean and dry during operation.

NOTICE
Device damage due to improper cleaning!
Improper cleaning may result in device damage.

- Only use suitable cleaning agents.
- Never use sharp objects for cleaning.

Cleaning the light emission window

NOTICE
Damage to the light emission window!
Reduced reading performance due to scratches or streaks on the light emission window!

- ► Clean the light emission window only when wet.
- ► Use a mild cleaning agent that does not contain powder additives. Do not use aggressive cleaning agents, such as acetone, etc.
- ► Avoid any movements that could cause scratches or abrasions on the light emission window.
- ► Only use cleaning agents suitable for the lens material.

NOTE
Static charge may cause dust particles to stick to the light emission window. This effect can be avoided by using an anti-static glass cleaner in combination with the SICK lens cloth (can be obtained from www.sick.com).

NOTE
If the light emission window is scratched or damaged (cracked or broken), the device must be replaced. Contact SICK Service to arrange this.

Cleaning the housing

In order to ensure that the heat produced by the internal power loss is adequately dissipated, the housing surface must be kept clean.

10 Decommissioning

10.1 Disassembly and disposal

Disassembling the device

1. Switch off the supply voltage to the device.
2. Detach all connecting cables from the device.
3. If the device is being replaced, mark its position and alignment on the bracket or surroundings.
4. Detach the device from the bracket.

Disposing of the device

Any device which can no longer be used must be disposed off in an environmentally friendly manner in accordance with the applicable country-specific waste disposal regulations.

NOTE

Disposal of batteries, electric and electronic devices

- According to international directives, batteries, accumulators and electrical or electronic devices must not be disposed of in general waste.
- The owner is obliged by law to return this devices at the end of their life to the respective public collection points.
- This symbol on the product, its package or in this document, indicates that a product is subject to these regulations.

10.2 Returning devices

► Do not dispatch devices to the SICK Service department without consultation.

NOTE

To enable efficient processing and allow us to determine the cause quickly, please include the following when making a return:

- Details of the contact person
- Description of the application
- Description of the fault that occurred

11 Technical data

11.1 General data

Table 11: Technical data

Attribute	Value
Sensing distance	13 mm
Light spot size/light spot direction	longitudinal: 3.9 mm x 1.2 mm
Sensing distance tolerance	± 3 mm
Supply voltage[1]	10.8 V – 28.8 V
current consumption	≤100 mA
Switching frequency	12,5 kHz
Response time	40 µs
Jitter	20 µs
Switching type	Push/pull or NPN
Switching output	HIGH = U_V –3 V / LOW ≤ 3 V
Input, teach-in (ET)	Teach: U = 10 V ... < U_V Run: U < 2 V
Enclosure rating	IP 67
Ambient temperature (operation)	–20 °C ... +60 °C
Ambient temperature (UL)	max. 60 °C
Ambient temperature (storage)	–25 °C ... +75 °C
Protection class	III
Circuit protection (A/B/C)	U_V connections, reverse polarity protected, output Q short-circuit and overcurrent protected, interference-pulse suppression
Max. output current of the switching output	100 mA

1 Operation in short-circuit protected network max. 8 A

11.2 Dimensional drawings

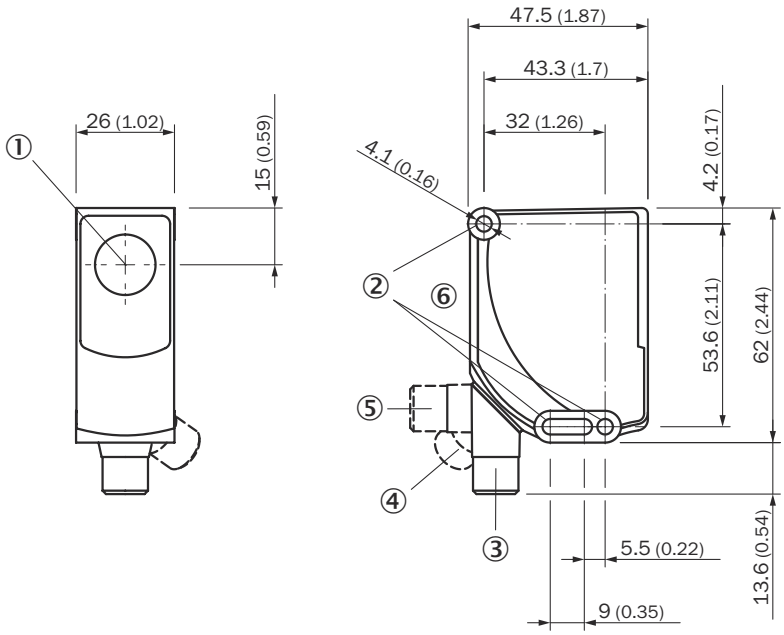

Figure 8: KTS Core / KTS Prime

① Optical axis
② Fixing hole
③ Connector M12, as-delivery state
④ Connector M12, mechanical stop rechts
⑤ Connector M12, mechanical stop left
⑥ Control panel

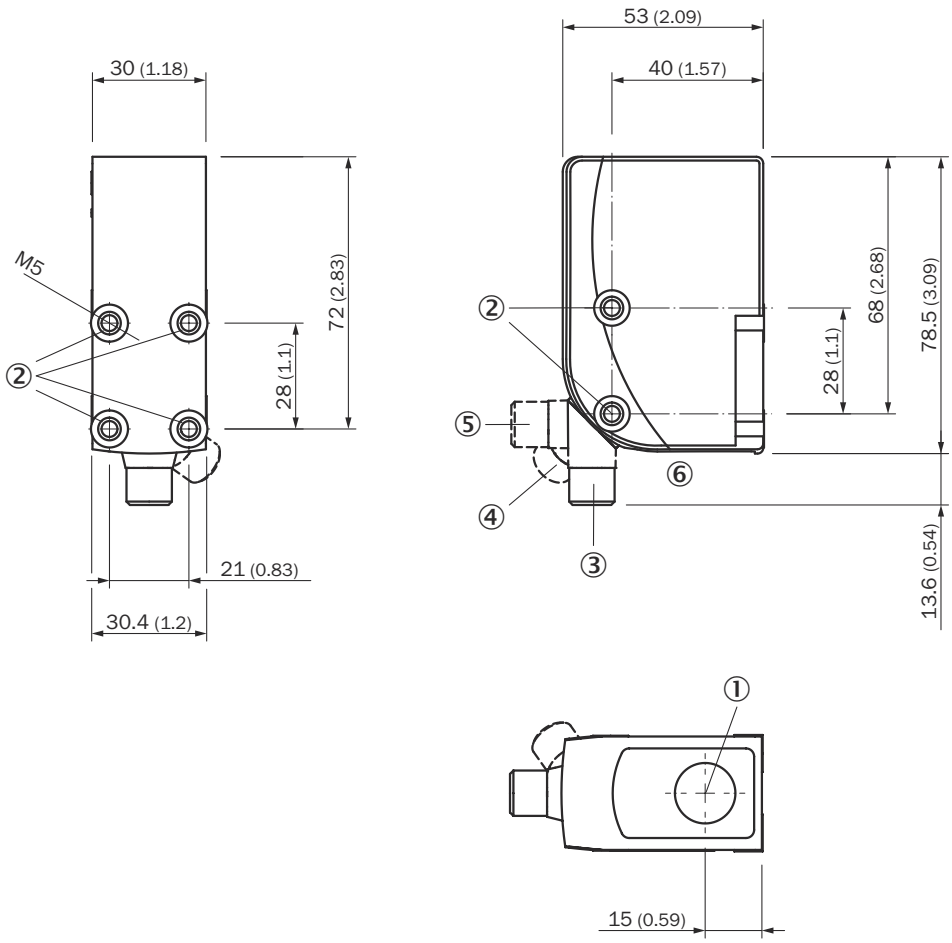

Figure 9: KTX Core light emission short side

① Optical axis
② M5 threaded mounting hole
③ Connector M12, as-delivery state
④ Connector M12, mechanical stop rechts
⑤ Connector M12, mechanical stop left
⑥ Control panel

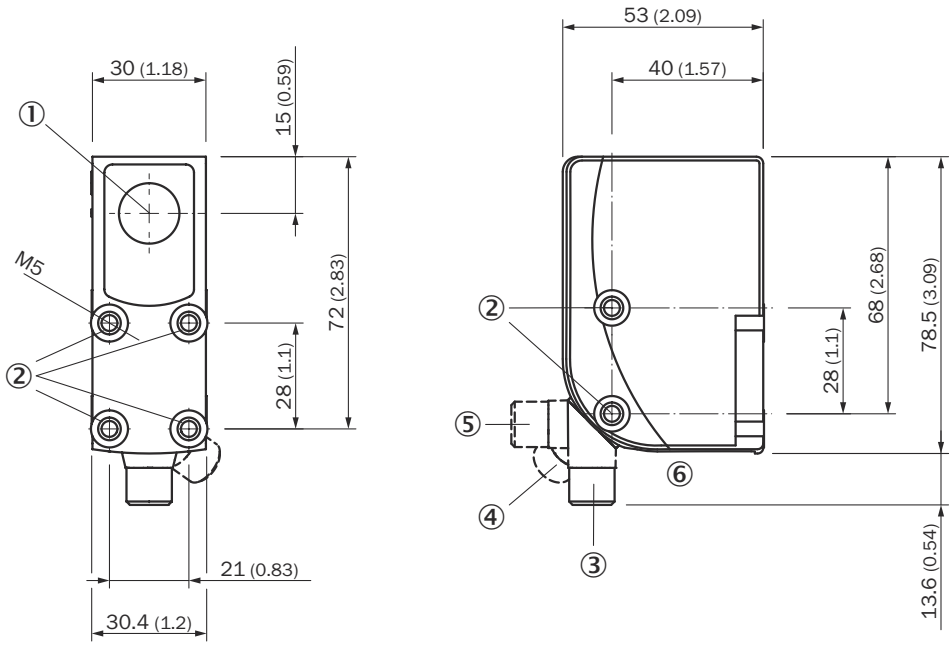

Figure 10: KTX Core light emission long side

① Optical axis
② M5 threaded mounting hole
③ Connector M12, as-delivery state
④ Connector M12, mechanical stop rechts
⑤ Connector M12, mechanical stop left
⑥ Control panel

12 Accessories

NOTE

Accessories can be found on the online product page at:

- www.sick.com/KTS
- www.sick.com/KTX

13 Annex

13.1 EU declaration of conformity and certificates

The EU declaration of conformity and other certificates can be downloaded from the Internet at:

- www.sick.com/KTS
- www.sick.com/KTX

13.2 Certification according to UL 60947-5-2

The contrast sensors of the KTS/KTX Prime and KTS/KTX Core series are certified in accordance with UL 60947-5-2 if they are supplied with power by LPS or Class 2 power supply units.

The certification is only valid with corresponding device identification on the type label of the respective device.

13.3 Licenses

SICK uses open-source software. This software is licensed by the rights holders using the following licenses among others: the free licenses GNU General Public License (GPL Version2, GPL Version3) and GNU Lesser General Public License (LGPL), the MIT license, zLib license, and the licenses derived from the BSD license.

This program is provided for general use, but WITHOUT ANY WARRANTY OF ANY KIND. This warranty disclaimer also extends to the implicit assurance of marketability or suitability of the program for a particular purpose.

More details can be found in the GNU General Public License. For complete license texts, see www.sick.com/licensetexts. Printed copies of the license texts are also available on request.

8021863.1P18/2025-02-25/en

Australia
Phone +61 (3) 9457 0600
1800 33 48 02 – tollfree
E-Mail sales@sick.com.au

Austria
Phone +43 (0) 2236 62288-0
E-Mail office@sick.at

Belgium/Luxembourg
Phone +32 (0) 2 466 55 66
E-Mail info@sick.be

Brazil
Phone +55 11 3215-4900
E-Mail comercial@sick.com.br

Canada
Phone +1 905.771.1444
E-Mail cs.canada@sick.com

Czech Republic
Phone +420 234 719 500
E-Mail sick@sick.cz

Chile
Phone +56 (2) 2274 7430
E-Mail chile@sick.com

China
Phone +86 20 2882 3600
E-Mail info.china@sick.net.cn

Denmark
Phone +45 45 82 64 00
E-Mail sick@sick.dk

Finland
Phone +358-9-25 15 800
E-Mail sick@sick.fi

France
Phone +33 1 64 62 35 00
E-Mail info@sick.fr

Germany
Phone +49 (0) 2 11 53 010
E-Mail info@sick.de

Greece
Phone +30 210 6825100
E-Mail office@sick.com.gr

Hong Kong
Phone +852 2153 6300
E-Mail ghk@sick.com.hk

Hungary
Phone +36 1 371 2680
E-Mail ertekesites@sick.hu

India
Phone +91-22-6119 8900
E-Mail info@sick-india.com

Israel
Phone +972 97110 11
E-Mail info@sick-sensors.com

Italy
Phone +39 02 27 43 41
E-Mail info@sick.it

Japan
Phone +81 3 5309 2112
E-Mail support@sick.jp

Malaysia
Phone +603-8080 7425
E-Mail enquiry.my@sick.com

Mexico
Phone +52 (472) 748 9451
E-Mail mexico@sick.com

Netherlands
Phone +31 (0) 30 204 40 00
E-Mail info@sick.nl

New Zealand
Phone +64 9 415 0459
0800 222 278 – tollfree
E-Mail sales@sick.co.nz

Norway
Phone +47 67 81 50 00
E-Mail sick@sick.no

Poland
Phone +48 22 539 41 00
E-Mail info@sick.pl

Romania
Phone +40 356-17 11 20
E-Mail office@sick.ro

Singapore
Phone +65 6744 3732
E-Mail sales.gsg@sick.com

Slovakia
Phone +421 482 901 201
E-Mail mail@sick-sk.sk

Slovenia
Phone +386 591 78849
E-Mail office@sick.si

South Africa
Phone +27 10 060 0550
E-Mail info@sickautomation.co.za

South Korea
Phone +82 2 786 6321/4
E-Mail infokorea@sick.com

Spain
Phone +34 93 480 31 00
E-Mail info@sick.es

Sweden
Phone +46 10 110 10 00
E-Mail info@sick.se

Switzerland
Phone +41 41 619 29 39
E-Mail contact@sick.ch

Taiwan
Phone +886-2-2375-6288
E-Mail sales@sick.com.tw

Thailand
Phone +66 2 645 0009
E-Mail marcom.th@sick.com

Turkey
Phone +90 (216) 528 50 00
E-Mail info@sick.com.tr

United Arab Emirates
Phone +971 (0) 4 88 65 878
E-Mail contact@sick.ae

United Kingdom
Phone +44 (0)17278 31121
E-Mail info@sick.co.uk

USA
Phone +1 800.325.7425
E-Mail info@sick.com

Vietnam
Phone +65 6744 3732
E-Mail sales.gsg@sick.com

Detailed addresses and further locations at **www.sick.com**