SICK.COM

OPERATING INSTRUCTIONS

deTec4 HG

Safety light curtain

SICK Sensor Intelligence

Described product

deTec4 HG

Manufacturer

SICK AG
Erwin-Sick-Str. 1
79183 Waldkirch
Germany

Legal information

This work is protected by copyright. Any rights derived from the copyright shall be reserved for SICK AG. Reproduction of this document or parts of this document is only permissible within the limits of the legal determination of Copyright Law. Any modification, abridgment or translation of this document is prohibited without the express written permission of SICK AG.

The trademarks stated in this document are the property of their respective owner.

© SICK AG. All rights reserved.

Original document

This document is an original document of SICK AG.

Contents

1 About this document ... 8
1.1 Purpose of this document ... 8
1.2 Scope ... 8
1.3 Target groups of these operating instructions ... 8
1.4 Additional information ... 8
1.5 Symbols and document conventions ... 9

2 Safety information ... 10
2.1 Basic safety notes ... 10
2.2 Intended use ... 11
2.3 Inappropriate use ... 12
2.4 Cybersecurity ... 12
2.5 Requirements for the qualification of personnel ... 12

3 Product description ... 14
3.1 Product identification via the SICK product ID ... 14
3.2 Product identification in mounted state ... 14
3.3 Structure and function ... 14
3.4 Product characteristics ... 16
3.4.1 Overview of the device (sender and receiver) ... 16
3.4.2 Hardened front screen ... 16
3.4.3 Absence of blind zones ... 16
3.4.4 IO-Link ... 16
3.4.5 Near Field Communication (NFC) ... 17
3.4.6 Function packages ... 17
3.4.7 System plug ... 19
3.4.8 Extension module ... 20
3.4.9 Status indicators ... 21
3.5 Example applications ... 25

4 Project planning ... 27
4.1 Manufacturer of the machine ... 27
4.2 Operating entity of the machine ... 27
4.3 Design ... 27
4.3.1 Scanning range and protective field width ... 28
4.3.2 Minimum distance of the safety light curtain to the hazardous point ... 31
4.3.3 Minimum distance from reflective surfaces ... 32
4.3.4 Protection against interference from systems in close proximity to each other ... 35
4.3.5 Reduced resolution ... 39
4.3.6 Muting ... 42
4.3.7 Smart Box Detection ... 61
4.3.8 Blanking ... 72
4.3.9 Multiple sampling ... 82

4.3.10 Operating modes ... 82
4.3.11 Object pattern recognition ... 87
4.4 Integration into the electrical control system ... 103
4.4.1 Restart interlock ... 105
4.4.2 External device monitoring (EDM) ... 109
4.4.3 Application diagnostic output ... 110
4.4.4 Signal lamp ... 114
4.4.5 Connection of sender and receiver ... 114
4.4.6 Laser alignment aid ... 116
4.4.7 Cascading ... 118
4.4.8 Smart presence detection ... 119
4.4.9 IO-Link ... 120
4.4.10 Muting ... 121
4.4.11 Control switch for Smart Box Detection Override ... 122
4.4.12 Control switches for operating modes ... 123
4.4.13 Inputs for safety sensors (SDI) ... 123
4.4.14 Connection diagrams ... 124
4.5 Testing plan ... 124
4.5.1 Test rod check ... 125
4.5.2 Visual check of the machine and the protective device ... 128

5 Mounting ... 130
5.1 Unpacking ... 130
5.2 Fitting the system plug ... 130
5.3 Mounting ... 131
5.3.1 Mounting the QuickFix bracket ... 135
5.3.2 Mounting the FlexFix bracket ... 136
5.3.3 Mounting the replacement bracket ... 139

6 Electrical installation ... 140
6.1 Security ... 140
6.2 System connection (M12, 5-pin) ... 142
6.3 System connection (M12, 8-pin) ... 143
6.4 Extension connection (M12, 5-pin) ... 144
6.5 Additional connections on the DMM4 extension module ... 145
6.6 Additional connections on the DCM4 extension module ... 146

7 Configuration ... 148
7.1 Overview ... 148
7.2 Security ... 148
7.3 Factory settings ... 149
7.4 Configuration mode ... 150
7.5 Configuration via system plug ... 151
7.5.1 Possible combinations of functions on SP2 system plug ... 153
7.5.2 Configuring beam coding ... 153
7.5.3 Configuring muting ... 155

7.5.4 Configuring the protective field width ... 157
7.5.5 Configuring reduced resolution (Basic) ... 158
7.5.6 Configuring smart presence detection ... 159
7.5.7 Configuring Smart Box Detection ... 160
7.5.8 Checking the parity ... 161
7.5.9 Configuring the restart interlock ... 162
7.5.10 Configuring external device monitoring (EDM) ... 163
7.5.11 Configuring application diagnostic output ... 163
7.5.12 Configuring cascading ... 164
7.5.13 Resetting to factory settings via DIP switches ... 166
7.6 Configuration via Safety Designer ... 167
7.6.1 Safety Designer configuration software ... 167
7.6.2 Overview ... 171
7.6.3 Configuring the system ... 172
7.6.4 Starting and stopping safety function ... 188
7.6.5 Report ... 188
7.6.6 Service ... 188
7.7 Service functions of the mobile app ... 190
7.8 User groups ... 191
7.9 Automatic restoration of the configuration when a device is replaced. 191

8 Commissioning ... 194
8.1 Overview ... 194
8.2 Switching on ... 195
8.3 Aligning the sender and receiver ... 195
8.3.1 Alignment with the QuickFix bracket ... 197
8.3.2 Alignment with the FlexFix bracket or with the replacement bracket ... 198
8.3.3 Alignment quality display ... 199
8.4 Check during commissioning and modifications ... 200

9 Operation ... 201
9.1 Overview ... 201
9.2 Regular thorough check ... 201

10 Maintenance ... 202
10.1 Regular cleaning ... 202
10.2 Regular thorough check ... 203

11 Troubleshooting ... 204
11.1 Overview ... 204
11.2 Security ... 204
11.3 Diagnostic LEDs ... 204
11.3.1 Indications when switching on ... 205
11.3.2 Status indicator ... 208
11.3.3 Fault indicators ... 215

11.4 Diagnostics using Safety Designer ... 225
11.4.1 Message history ... 225
11.4.2 Data recorder ... 226
11.4.3 Event history ... 228
11.4.4 Status of the beams ... 228
11.5 Diagnostics using the mobile app ... 228
11.6 Diagnostics via SOPAS ET ... 229

12 Decommissioning ... 230
12.1 Disposal ... 230

13 Technical data ... 231
13.1 Version numbers and functional scope ... 231
13.2 Data sheet ... 232
13.3 Number of beams in the system ... 237
13.4 Response time ... 238
13.5 Tolerance times ... 253
13.6 Power consumption ... 254
13.7 Length of cable ... 254
13.8 Table of weights ... 257
13.9 Dimensional drawings ... 258

14 Ordering information ... 260
14.1 Scope of delivery ... 260
14.2 Ordering information ... 260

15 Accessories ... 263
15.1 Brackets ... 263
15.2 Mounting accessories ... 263
15.3 Extension modules ... 263
15.4 Weld spark guard ... 263
15.5 Connection technology ... 264
15.6 Alignment aid ... 267
15.7 Deflector mirrors ... 267
15.7.1 Function and use ... 267
15.7.2 Change in scanning range using deflector mirrors ... 268
15.7.3 Deflector mirror PNS75 - ordering information ... 269
15.7.4 Deflector mirror PNS125 - ordering information ... 269
15.8 Mirror columns ... 270
15.9 Device columns ... 270
15.10 Cleaning agent ... 271
15.11 Test rods ... 271
15.12 Muting accessories ... 271
15.13 Additional accessories ... 273

16 Annex ... 274
16.1 Conformities and certificates ... 274

16.1.1 EU declaration of conformity 274
16.1.2 UK declaration of conformity 274
16.2 Note on standards 274
16.3 Checklist for initial commissioning and commissioning 275

17 List of figures 276

18 List of tables 278

1 About this document

1.1 Purpose of this document

These operating instructions contain information required during the life cycle of the safety light curtain.

These operating instructions are available to all those who work with the safety light curtain.

Please read these operating instructions carefully and make sure that you understand the content fully before working with the safety light curtain.

1.2 Scope

This document applies to the following products:

- Product code: deTec4 HG
- “Operating instructions” type label entry: 8023854

Document identification

Document part number:

- This document: 8023856
- Available language versions of this document: 8023854

You can find the current version of all documents at **www.sick.com**.

1.3 Target groups of these operating instructions

Some sections of these operating instructions are intended for certain target groups. However, the entire operating instructions are relevant for intended use of the product.

Table 1: Target groups and selected sections of these operating instructions

Target group	Sections of these operating instructions
Project developers (planners, developers, designers)	"Project planning", page 27 "Configuration", page 148 "Technical data", page 231 "Accessories", page 263
Installers	"Mounting", page 130
Electricians	"Electrical installation", page 140
Safety experts (such as CE authorized representatives, compliance officers, people who test and approve the application)	"Project planning", page 27 "Configuration", page 148 "Commissioning", page 194 "Technical data", page 231 "Checklist for initial commissioning and commissioning", page 275
Operators	"Operation", page 201 "Troubleshooting", page 204
Maintenance personnel	"Maintenance", page 202 "Troubleshooting", page 204

1.4 Additional information

www.sick.com

The following information is available on the Internet:

- Data sheets and application examples
- CAD data and dimensional drawings

- Certificates (e.g. EU declaration of conformity)
- Guide for Safe Machinery Six steps to a safe machine

1.5 Symbols and document conventions

The following symbols and conventions are used in this document:

Warnings and other notes

DANGER
Indicates a situation presenting imminent danger, which will lead to death or serious injuries if not prevented.

WARNING
Indicates a situation presenting possible danger, which may lead to death or serious injuries if not prevented.

CAUTION
Indicates a situation presenting possible danger, which may lead to moderate or minor injuries if not prevented.

NOTICE
Indicates a situation presenting possible danger, which may lead to property damage if not prevented.

NOTE
Highlights useful tips and recommendations as well as information for efficient and trouble-free operation.

Instructions to action

→ The arrow denotes instructions to action.

1. The sequence of instructions for action is numbered.
2. Follow the order in which the numbered instructions are given.

✔ The check mark denotes the result of an instruction.

LED symbols

These symbols indicate the status of an LED:

○ The LED is off.
The LED is flashing.
● The LED is illuminated continuously.

Sender and receiver

These symbols indicate the sender and receiver of the device:

The symbol indicates the sender.
The symbol indicates the receiver.

2 Safety information

2.1 Basic safety notes

Integrating the product

DANGER
The product can not offer the expected protection if it is integrated incorrectly.

→ Plan the integration of the product in accordance with the machine requirements (project planning).
→ Implement the integration of the product in accordance with the project planning.

Mounting and electrical installation

DANGER
Death or severe injury due to electrical voltage and/or an unexpected startup of the machine

→ Make sure that the machine is (and remains) disconnected from the voltage supply during mounting and electrical installation.
→ Make sure that the dangerous state of the machine is and remains switched off.

Repairs and modifications

DANGER
Improper work on the product

A modified product may not offer the expected protection if it is integrated incorrectly.

→ Apart from the procedures described in this document, do not repair, open, manipulate or otherwise modify the product.

Laser notes

CAUTION
Laser class 1

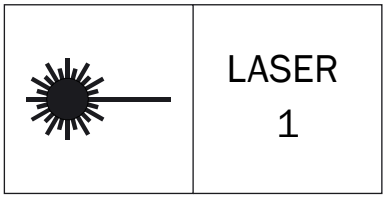

Figure 1: Laser class 1

This device has been classified in accordance with the following standards:

- IEC 60825-1:2014
- EN 60825-1:2014 with A11:2021
- 21 CFR 1040.10 and 1040.11, except for changes due to Laser Notice No. 56 dated May 8, 2019

The laser is eye-safe. Looking directly into the laser may cause temporary impairments.

The outlet opening of the laser radiation is located in the sender, see figure 6, page 22.
The laser is only active when the laser alignment aid is switched on.

The laser marking is located on the back of the sender.

→ You must comply with the latest version of the applicable laser safety regulations.

CAUTION
Optical radiation: Class 1 Laser Product

Caution - if any operating or calibrating equipment other than those specified here are used or other methods are employed, this can lead to dangerous exposure to radiation.

→ Use only the tools and auxiliary equipment specified in this documentation.
→ Only carry out the procedures specified in this documentation.
→ Do not open the housing unless carrying out the mounting and maintenance operations provided in this documentation.

Front screen

DANGER
Risk of injury due to damage to the front screen

The front screen is made of glass. Glass splinters or damage can change the optical characteristics or lead to injury.

→ Replace the device if the front screen is scratched or damaged.

2.2 Intended use

The deTec4 HG safety light curtain is an electro-sensitive protective device (ESPE) and is suitable for the following applications:

- Hazardous point protection
- Access protection
- Hazardous area protection

The product may be used in safety functions.

The deTec4 HG safety light curtain must only be used within the limits of the prescribed and specified technical data and operating conditions at all times.

Any instance of improper use, incorrect modification, or manipulation of the deTec4 HG safety light curtain shall void any warranty provided by SICK AG; furthermore, SICK AG shall not accept any responsibility or liability for any resulting damage and consequential damage.

2.3 Inappropriate use

The safety light curtain works as an indirect protective measure and cannot provide protection from parts thrown out nor from emitted radiation. Transparent objects are not detected.

Among others, the deTec4 HG safety light curtain is not suitable for the following applications:

- Outdoors
- Underwater
- In explosion-hazardous areas
- At altitudes over 3,000 m above sea level
- In environments with increased levels of ionizing radiation
- In environments where glass splinters pose a risk

2.4 Cybersecurity

Overview

To protect against cybersecurity threats, the operator must have a comprehensive cybersecurity concept, which must be continuously monitored and maintained. A suitable concept consists of organizational, technical, procedural, electronic, and physical levels of defense and considers suitable measures for different types of risks. The measures implemented in this product can only support protection against cybersecurity threats if the product is used as part of such a concept.

You will find further information at www.sick.com/psirt, e.g.:

- General information on cybersecurity
- Contact option for reporting vulnerabilities
- Information on known vulnerabilities (security advisories)

2.5 Requirements for the qualification of personnel

The safety light curtain must only be configured, installed, connected, commissioned and serviced by qualified safety personnel.

Project planning

You need safety expertise to implement safety functions and select suitable products for that purpose. You need expert knowledge of the applicable standards and regulations.

Mounting, electrical installation and commissioning

You need suitable expertise and experience. You must be able to assess if the machine is operating safely.

Configuration

You need suitable expertise and experience. You must be able to assess if the machine is operating safely.

Operation and maintenance

You need suitable expertise and experience. You must be instructed in machine operation by the machine operator. For maintenance, you must be able to assess if the machine is operating safely.

3 Product description

3.1 Product identification via the SICK product ID

SICK product ID

The SICK product ID uniquely identifies the product. It also serves as the address of the web page with information on the product.

The SICK product ID comprises the host name pid.sick.com, the part number (P/N), and the serial number (S/N), each separated by a forward slash.

For newer products, the SICK product ID is displayed as text and QR code on the type label and/or on the packaging.

Figure 2: SICK product ID

3.2 Product identification in mounted state

In addition to the SICK Product ID on the type label, the product identification information is also printed on the front of the device. The following information is also visible in the mounted state:

- Device type
- Part number (P/N)
- Serial number (S/N)

3.3 Structure and function

Overview

The deTec4 HG safety light curtain is an electro-sensitive protective device (ESPE) consisting of a sender and receiver.

A series of parallel infrared light beams forms a protective field between sender and receiver that protects the hazardous area (hazardous point, access, and hazardous area protection). When one or more light beams are completely interrupted, the safety light curtain reports the interruption in the light path to the OSSDs (safety outputs) by a signal change. The machine or its control system must evaluate the signals safely (e.g., via a safety controller or safety relay) and end the dangerous state.

Sender and receiver automatically synchronize themselves optically. An electrical connection between both components is not required, but is advantageous.

The safety light curtain can be combined with an extension module for an extended functional scope and the option of software configuration.

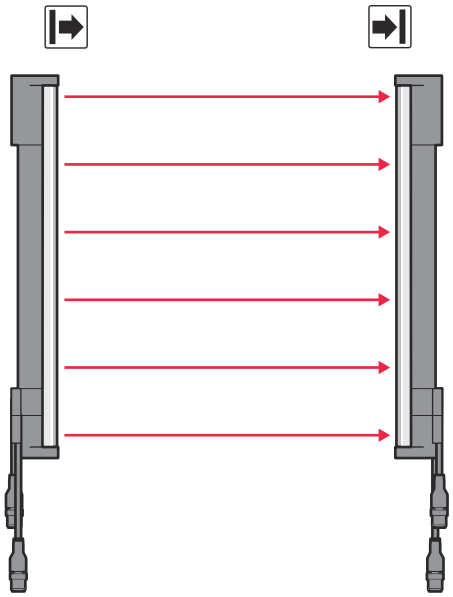

Figure 3: Sender and receiver

Protective field height

The protective field height indicates the range within which the test rod belonging to the safety light curtain is reliably detected.

Protective field width

The protective field width is the dimension of the light path between sender and receiver. The maximum protective field width is limited by the scanning range.

Resolution

The resolution describes the size of the smallest object detected by the safety light curtain in the protective field. The resolution corresponds to the diameter of the test rod belonging to the safety light curtain.

The safety light curtain has a physical resolution of 14 mm. This resolution provides finger protection.

The safety light curtain has a physical resolution of 30 mm. This resolution provides hand protection.

Scanning range

The scanning range limits the maximum protective field width.

The scanning range is reduced by using deflector mirrors.

The scanning range is reduced by using a weld spark guard.

Further topics

- "Extension module", page 20
- "Connection of sender and receiver", page 114
- "Data sheet", page 232

3.4 Product characteristics

3.4.1 Overview of the device (sender and receiver)

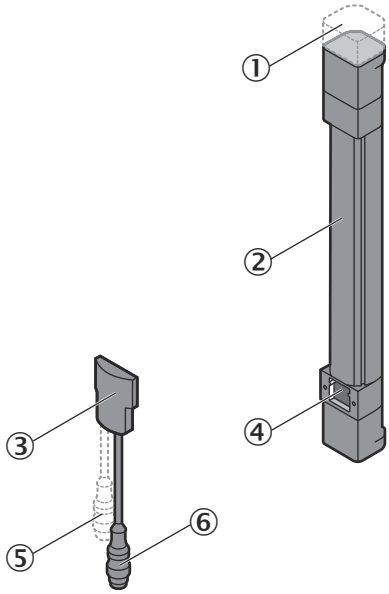

Figure 4: Overview of the device (sender or receiver)

① End cap with integrated indicator LED (available as an option on the receiver)

② Sender or receiver

③ System plug

④ Terminal compartment

⑤ Extension connection (only for certain system plugs)

⑥ System connection

3.4.2 Hardened front screen

The front screen of the safety light curtain deTec4 HG (hardened glass) has a high resistance to chemicals and is suitable for environments in which coolants and lubricants or cleaning agents are used.

A list of all substances that have been tested for compatibility with the device materials is available from SICK on request.

3.4.3 Absence of blind zones

The design and construction of the safety light curtain extends the protective function of a device to the end of the housing without any blind spots. The absence of blind zones reduces the space requirement when integrated in the machine.

Exception: If the end cap on the receiver contains an integrated LED, the protective function of the device only extends to below the LED.

3.4.4 IO-Link

Overview

The product can communicate with an IO-Link master via an IO-Link connector, which is available as an accessory.

You can use the IO-Link interface to read out diagnostic and configuration data from the connected devices and control individual system functions.

The IO-Link connector can also be used to connect two signals (e.g., muting signals).

Complementary information

The product must be supplied with voltage to enable communication with an IO-Link master via the IO-Link connector.

Additional information on connecting the IO-Link connector can be found in the IO-Link connector mounting instructions.

Further topics

- "Accessories", page 263
- "IO-Link", page 120

3.4.5 Near Field Communication (NFC)

Overview

The receiver of the protective device has an integrated NFC interface for transmitting diagnostic and configuration data from all devices of the protective device connected to the receiver to an NFC-enabled device.

The NFC-capable antenna is integrated behind the front screen of the receiver. The area is marked with the NFC symbol.

Figure 5: NFC symbol [1)]

The integrated NFC interface is intended for temporary use.

SICK Safety Assistant app

To access the information for diagnostics and configuration, you need the SICK Safety Assistant app provided by SICK on the NFC-capable device, e.g. smartphone.

The SICK Safety Assistant app is available for devices with the following operating systems:

- Android
- iOS

Further topics

- "Diagnostics using the mobile app", page 228
- "Service functions of the mobile app", page 190

3.4.6 Function packages

The product can be used with different function packages. The function packages are determined by the equipment used.

1) The N-Mark is a trademark or registered trademark of NFC Forum, Inc. in the United States and in other countries.

Table 2: Function packages

Function package	Equipment
SP1	• Receiver with SP1 system plug • Sender with SP1 system plug • Optional for cascade: Additional receivers and senders with SP1 system plug
SP2	• Receiver with SP2 system plug • Sender with SP1 system plug • Optional for cascade: Additional receivers and senders with SP1 system plug
DMM4	• Receiver with SP1 system plug • Sender with SP1 system plug • DMM4 extension module • Optional for cascade: Additional receivers and senders with SP1 system plug
DCM4	• Receiver with SP1 system plug • Sender with SP1 system plug • DCM4 extension module • Optional for cascade: Additional receivers and senders with SP1 system plug

Table 3: Function packages and included functions

Function	SP1	SP2	DMM4	DCM4
Beam coding	✓	✓	✓	✓
Restart interlock	✓	✓	✓	✓
Smart restart interlock [1) 2)]	–	–	✓	✓
External device monitoring (EDM)	✓	✓	✓	✓
Application diagnostic output	✓	✓	✓ [3)]	✓ [3)]
Cascading	✓	✓	✓	✓
Smart presence detection	–	✓	✓	✓
Reduced resolution (Basic)	–	✓ [4)]	✓ [5)]	✓ [5)]
Reduced resolution (Advanced) [6)]	–	–	–	✓
Manual adjustment of the protective field width	–	✓ [7)]	✓	✓
Transmitting power adjustment [1)]	✓ [8)]	✓ [8)]	✓	✓
Muting (2-signal muting)	–	✓	✓ [9)]	✓ [9)]
Muting (4-signal muting) [1)]	–	–	✓	–
Partial muting	–	✓	✓	✓
Fixed blanking [6)]	–	–	✓	✓
Teach-in for fixed blanking [6)]	–	–	–	✓
Floating blanking [6)]	–	–	–	✓
Smart Box Detection	–	✓ [10)]	–	✓ [6)]
Operating modes [1)]	–	–	✓	✓
Configurable multiple sampling [1)]	–	–	✓	✓
Inputs for safety sensors (SDI) [1)]	–	–	✓	–

Function	SP1	SP2	DMM4	DCM4
Object pattern recognition [6]	–	–	–	✓

1) Available with functional scope V 1.2.0 or higher.
2) For functional scope V 1.3.0 or higher, the range of the smart restart interlock can be restricted.
3) The virtual detection field function is available for functional scope V 1.3.0 or higher.
4) The resolution of a device can be reduced by up to 2 beams.
5) For functional scope V 1.3.0 or higher, the resolution of a device can be reduced by a maximum of 28 beams (14 mm resolution) or by a maximum of 10 beams (30 mm resolution).
6) Available with functional scope V 1.3.0 or higher.
7) It is only possible to configure the very small range via software configuration.
8) It is only possible to configure the transmitting power via software configuration.
9) For functional scope V 1.2.0 or higher, 2-signal muting is flexibly configurable via software configuration.
10) Available with functional scope V 1.1.0 or higher.

3.4.7 System plug

Overview

By using a system plug, the functions of the corresponding function package are available to you.

The following system plugs are available for the product:

- SP1 system plug
- SP2 system plug

Each system plug is available in the following types:

- System plug with 5-pin system connection
- System plug with 8-pin system connection
- System plug with 5-pin system connection and 5-pin extension connection
- System plug with 8-pin system connection and 5-pin extension connection

Using the system plugs

The SP1 system plug can be used on all of the senders and receivers of a single system or on a host–guest system.

The SP2 system plug is only used on the receiver of a host system or single system. The SP1 system plug is used on all other receivers of the guest systems and on all senders.

When using an extension module, SICK recommends selecting the SP1 system plug for the sender and receiver.

Table 4: Use of SP1 system plug in a single system

	SP1 system plug type code			
	1000	1200	1100	1300
Sender	✓	✓ [1]	✓ [2]	✓ [1] [2]
Receiver	✓	✓	✓	✓

✓ SP1 system plug suitable.
1) At the sender, the 8-pin system connection is solely for the purposes of providing standardized wiring.
It is recommended if the 8-pin system connection at the receiver is used and the sender and receiver are connected to each other via a T-splitter.
The 8-pin system connection is also recommended if the sender is connected to an extension module.
2) If a sender does not have an additional guest connected to it, the extension connection has no function and must be sealed with a protective cap.

Table 5: Use of SP2 system plug in a single system

	SP2 system plug type code			
	2000	2200	2100	2300
Sender	–	–	–	–
Receiver	✓	✓	✓	✓

✓ SP2 system plug suitable.

- SP2 system plug not suitable. An SP1 system plug must be used at the sender of a single system.

Table 6: Use of system plugs in a cascade

		SP1 system plug type code			SP2 system plug type code	
		1000	1100	1300	2100	2300
Host	Sender	–	✓	✓ [1]	–	–
	Receiver	–	✓	✓	✓	✓
First guest (for cascade with 2 guest devices)	Sender	–	✓	–	–	–
	Receiver	–	✓	–	–	–
Last guest	Sender	✓	✓ [2]	–	–	–
	Receiver	✓	✓	–	–	–

✓ System plug suitable.

- System plug not suitable. An SP1 system plug must be used on the receiver of a guest system as well as on the sender of a host system and guest system.

1) At the sender, the 8-pin system connection is solely for the purposes of providing standardized wiring. It is recommended if the 8-pin system connection at the receiver is used and the sender and receiver are connected to each other via a T-splitter.
The 8-pin system connection is also recommended if the sender is connected to an extension module.

2) If a sender does not have an additional guest connected to it, the extension connection has no function and must be sealed with a protective cap.

3.4.8 Extension module

Overview

The product can be combined with an extension module. By using an extension module, the functions of the corresponding function package and the ability to configure the software are available to you.

The following extension modules are available for the product:

- DMM4
- DCM4

The extension modules provide the following extensions:

- Function package DMM4 or function package DCM4
- Additional inputs and outputs (application diagnostic outputs)
- USB interface for using the Safety Designer software for the devices of the ESPE (sender, receiver) and the extension module itself
  - Configuration
  - Diagnostics
  - Service functions
- Configuration memory for the devices of the ESPE (sender, receiver) and the extension module (when using software configuration)

- Ability to connect the sender and receiver via the extension module:
  - Protective field status display on the sender
  - Status display (e.g., muting active, reset required) on the sender
  - Sender diagnostics via NFC or IO-Link

Connection

The extension module is connected to the system connection of the receiver of a host or single system. As soon as this is done, the system connection of the extension module becomes the system connection for the entire system (extension module with ESPE).

The receiver automatically detects the connected extension module. If the extension module already contains a configuration, this is applied to the connected devices of the ESPE.

The sender can optionally be connected to the extension module.

If an operating mode selector switch is also to be used on the DCM4 extension module, both devices can be connected to the 8-pin connection for the sender via a T-splitter.

NOTE
The extension modules can only be connected to the following receivers:

- Functional scope V 1.2.0 or higher

The extension modules can only be connected to the following senders:

- Functional scope V 1.1.0 or higher

Combination with system plugs

You can use an extension module in combination with the SP1 or SP2 system plugs.

SICK recommends using it in combination with the SP1 system plug.

Complementary information

If you do not need the extended functions and the corresponding connections of the extension module, you can also just temporarily connect an extension module to the receiver (and the sender if required) in order to use the USB interface.

This allows you to use the Safety Designer functions and perform the following tasks, for example:

- Change the configuration and, for example, adjust muting parameters.
- Perform a diagnosis without changing the existing configuration.

Further topics

- "Function packages", page 17
- "Automatic restoration of the configuration when a device is replaced", page 191

3.4.9 Status indicators

Overview

The sender and receiver LEDs indicate the operational status of the safety light curtain.

Sender displays

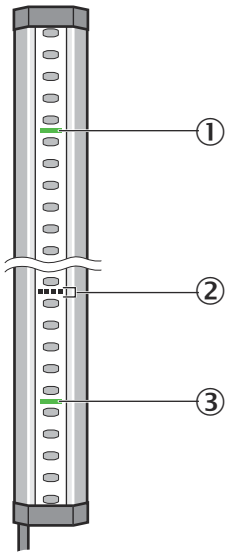

Figure 6: Sender displays

The sender has one laser alignment aid, and at least two light emitting diodes that indicate the operational status.

Table 7: Sender displays

Position	LED color	Function	Labeling
①	Red/yellow/green	Field indicator [1]; shows the status of the protective field and additional information about the status display	–
②	–	Laser alignment aid For easy alignment of the sender.	–
③	Red/yellow/green	Status indicator	STATE

1) Safety light curtains with protective field height > 300 mm have multiple LEDs for the field indicator.

Receiver displays

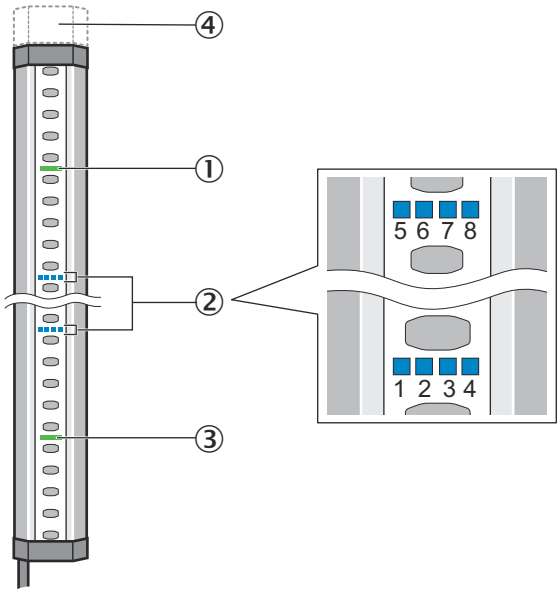

Figure 7: Receiver displays

At least 10 LEDs on the receiver indicate the operational status.

Table 8: Receiver displays

Position	LED color	Function	Labeling
①	Red/yellow/green	Field indicator [1]; shows the status of the protective field and additional information about the status display	–
②	Blue/red/yellow/white	Diagnostics and alignment quality	1, 2, 3, 4, 5, 6, 7, 8
③	Red/green	OSSD state	OSSD
④	Red/yellow/green	End cap with integrated LED (optional)	–

[1] Safety light curtains with protective field height > 300 mm have multiple LEDs for the field indicator.

For a simple alignment of the receiver, diagnostic LEDs 1, 2, 3 and 4 indicate the alignment quality once the safety light curtain has been switched on.

Diagnostic LEDs 5 and 6 light up if the topmost beam (far from system plug) is synchronized. Diagnostic LEDs 7 and 8 light up if the bottommost beam (near system plug) is synchronized.

The integrated indicator lamp in the end cap of the receiver assumes the indications of the field display.

Further topics

- "Diagnostic LEDs", page 204

3.4.9.1 Indication of diagnostic LEDs

Table 9: Colors and their meaning

Color	Meaning
White	Configuration status

Color	Meaning
Blue	Alignment quality
Red	Fault indication
Yellow	Warning

○ LED off. ☀ LED flashes. ● LED illuminates.

Table 10: Indication of the configuration status

Diagnostic LEDs	Color	Configuration
1	● White	External device monitoring (EDM) is configured. (If no software configuration is active)
2	● White	Cascade with 1 or with 2 guest devices is configured. (If no software configuration is active)
3	● White	Beam coding is configured. (If no software configuration is active)
4	● White	Restart interlock is configured. (If no software configuration is active)
5	● White	Muting or Smart Box Detection is configured. (If no software configuration is active)
6	● White	Reduced resolution is configured. (If no software configuration is active)
7	● White	A range for the protective field width (manual setting) is configured. (If no software configuration is active)
8	● White	Software configuration is active.

○ LED off. ☀ LED flashes. ● LED illuminates.

Table 11: Alignment quality display

Diagnostic LEDs	Color	Meaning
1 ... 4	● Blue	Indication of the alignment quality. If only one diagnostic LED lights up, the alignment is insufficient. If all 4 diagnostic LEDs light up, the alignment is excellent.
5, 6	● Blue	The topmost beam (far from system plug) is synchronized.
7, 8	● Blue	The bottommost beam (near system plug) is synchronized.

○ LED off. ☀ LED flashes. ● LED illuminates.

Table 12: Fault indication

Diagnostic LEDs	Color	Meaning
1 ... 8	● Red	A red illuminated diagnostic LED signals the function at which an error has occurred.
1 ... 8	☀ Red	A red flashing diagnostic LED signals the reason for the error.

○ LED off. ☀ LED flashes. ● LED illuminates.

Example: If diagnostic LED 1 lights up red and diagnostic LED 5 flashes red, an EDM error exists.

Table 13: Warnings

Diagnostic LED	Color	Meaning
1 ... 8	● Yellow	A yellow illuminated diagnostic LED signals which function is affected.

Diagnostic LED	Color	Meaning
1 ... 8	Yellow	A yellow flashing diagnostic LED signals the reason for the warning.

○ LED off. ☀ LED flashes. ● LED illuminates.

Example: If diagnostic LED 5 lights up yellow and diagnostic LED 3 flashes yellow, the sensor gap monitoring was exceeded.

Further topics

- "Diagnostic LEDs", page 204

3.5 Example applications

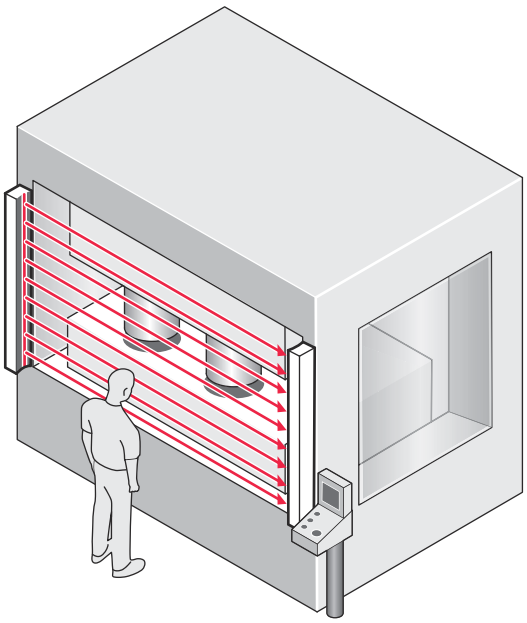

Figure 8: Hazardous point protection

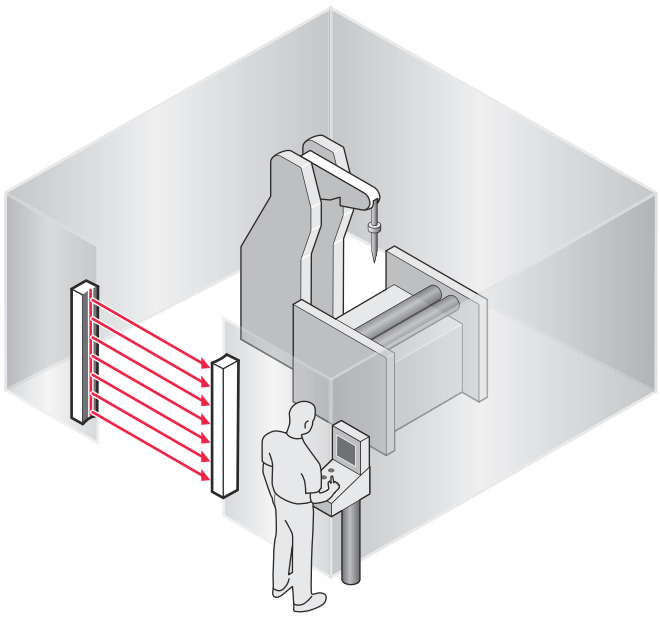

Figure 9: Access protection

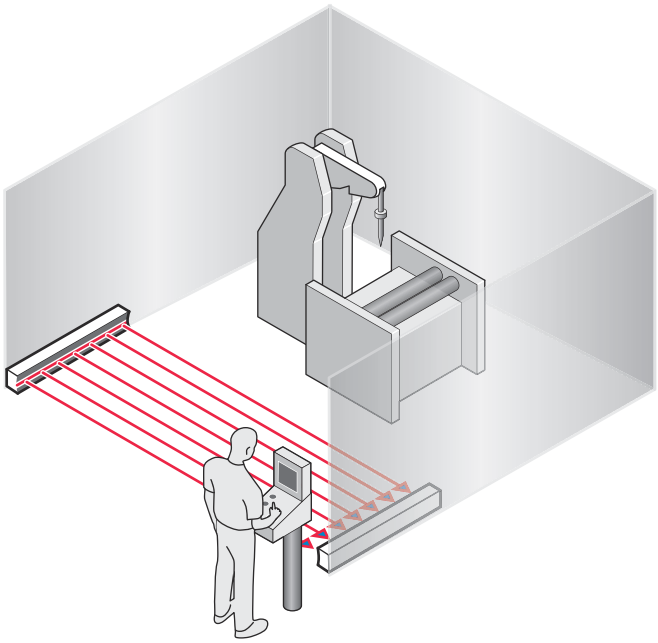

Figure 10: Hazardous area protection

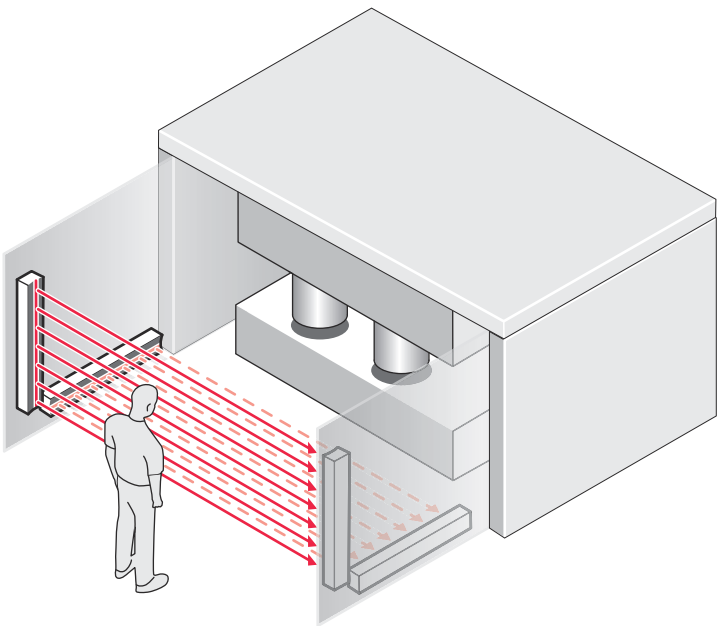

Figure 11: Access protection with smart presence detection, implemented using cascade

4 Project planning

4.1 Manufacturer of the machine

The manufacturer of the machinery must carry out a risk assessment and apply appropriate protective measures. Further protective measures may be required in addition to the product.

The product must not be tampered with or changed, except for the procedures described in this document.

The product must only be repaired by the manufacturer of the product or by someone authorized by the manufacturer. Improper repair can result in the product not providing the expected protection.

4.2 Operating entity of the machine

Changes to the electrical integration of the product in the machine controller and changes to the mechanical mounting of the product necessitate a new risk assessment. The results of this risk assessment may require the entity operating the machine to meet the obligations of a manufacturer.

After each change to the configuration, it is necessary to check whether the protective measure provides the necessary protection. The person making the change is responsible for ensuring that the protection measure provides the necessary protection.

The product must not be tampered with or changed, except for the procedures described in this document.

The product must only be repaired by the manufacturer of the product or by someone authorized by the manufacturer. Improper repair can result in the product not providing the expected protection.

4.3 Design

Overview

In this section you will find important information for design.

Important information

DANGER
Hazard due to lack of effectiveness of the protective device

Persons and parts of the body to be protected may not be recognized in case of non-observance.

→ Make sure that the following construction requirements are met so that the safety light curtain can fulfill its protective function.
  - Sender and receiver must be arranged such that persons or parts of the body are reliably detected when they enter the hazardous area.
  - Reaching under, over, and around as well as moving the safety light curtain must be prevented.
  - Check whether additional protective measures (e.g. restart interlock) are necessary when it is possible for people to be located between the protective device and the hazardous point without being detected.

DANGER
Hazard due to lack of effectiveness of the protective device

Certain types of light radiation can influence the protective device, e.g., light radiation from fluorescent lamps with electronic ballast installed in the path of the beam, or beams from laser pointers directed at the receiver.

→ If this type of light radiation is present in the environment of the protective device, take additional measures to ensure that the protective device does not become dangerous.

DANGER
Hazard due to lack of effectiveness of the protective device

Persons and parts of the body to be protected may not be recognized in case of non-observance.

→ Make sure that the optical properties of the front screens of the sender and receiver are not changed, e.g., by:
  - beading water, mist, frost, or ice formation. If applicable, remove films or other types of contamination, disconnect the voltage supply of the receiver and then switch it back on.
  - Scratches or damage. Replace the device if the front screen is scratched or damaged.

→ Make sure that all reflective surfaces and objects maintain a minimum distance from the protective field.

→ Make sure that no dispersive media (e.g., dust, fog, or smoke) are within the calculated minimum distance from the protective field.

Further topics

- "Mounting", page 130

4.3.1 Scanning range and protective field width

Protective field width

The protective field width is the dimension of the light path between sender and receiver. The maximum protective field width is limited by the scanning range.

Scanning range

The scanning range limits the maximum protective field width. The protective field width can change during operation depending on the setting.

The scanning range is reduced by using deflector mirrors.

The scanning range is reduced by using a weld spark guard.

Setting the protective field width

You can set the protective field width in the following ways:

- Automatic calibration of the protective field width:
  - The protective field width is automatically calibrated during initialization each time the safety light curtain is switched on. There must be no object in the protective field.
  - The position of the safety light curtain may not change later.
- Manual adjustment of the protective field width:
  - You define a range within which the protective field width can vary. The protective field width can change within this range even during operation.
  - This variant must be used in the following cases:

- Dynamic protective field width
- Reduction of scanning range
- Blanking
- Object pattern recognition

○ If you reduce the scanning range, you can reduce the minimum distance to identical systems. Therefore, select the smallest possible range that covers the desired protective field width.

The scanning range can be reduced further, if required:

- "Using a sender with a small scanning range", page 38
- "Transmitting power adjustment", page 38

Complementary information

The minimum distance to reflective surfaces and identical systems depends on the maximum protective field width.

Further topics

- "Minimum distance from reflective surfaces", page 32
- "Minimum distance to identical systems", page 38
- "Technical data", page 231
- "Weld spark guard", page 263
- "Deflector mirrors", page 267

4.3.1.1 Manual adjustment of the protective field width

Overview

You can select a range within which the protective field width can vary during operation.

The actual size of the range depends on the resolution.

You can also reduce the transmitting power of the sender, which further reduces the actual size of the ranges. You can reduce the transmitting power of the sender either via software configuration or by using a sender with a small scanning range.

Important information

NOTE
The selected range must cover the entire required protective field width and has an effect on the minimum distance to reflective surfaces and identical systems.

→ Select the smallest possible range that covers both the lower and upper limits of the required protective field width.

Prerequisites

- Function package SP2 or DMM4 or DCM4

Adjustable ranges

The actual size of the range depends on the resolution and the transmitting power.

Table 14: Resulting ranges with manual setting of the protective field width (full transmitting power, resolution 14 mm)

Configuration	Resulting range for the protective field width	
	Minimum [1]	Typical [2]
Very small range [3]	0.15 m ... 2.8 m	0.15 m ... 3.5 m
Small range	0.15 m ... 4 m	0.15 m ... 5 m

Configuration	Resulting range for the protective field width	
	Minimum [1]	Typical [2]
Medium range	1 m ... 8 m	1 m ... 10 m
Large range	2 m ... 16 m	2 m ... 20 m

1) The minimum scanning range specifies a range in which a function is guaranteed to operate correctly and safely under industrial conditions. A sufficient level of signal reserve to ensure very high availability is included in the calculation.
2) The typical scanning range indicates a range in which the ESPE functions perfectly and reliably under industrial conditions. The level of signal reserve is enough to ensure high availability.
3) The setting is only possible via software configuration.

Table 15: Resulting ranges with manual setting of the protective field width (reduced transmitting power, resolution 14 mm)

Configuration	Resulting range for the protective field width	
	Minimum [1]	Typical [2]
Very small range [3]	0.15 m ... 1.4 m	0.15 m ... 1.8 m
Small range	0.15 m ... 2 m	0.15 m ... 2.5 m
Medium range [3]	0.15 m ... 4 m	0.15 m ... 5 m
Large range [3]	1 m ... 8 m	1 m ... 10 m

1) The minimum scanning range specifies a range in which a function is guaranteed to operate correctly and safely under industrial conditions. A sufficient level of signal reserve to ensure very high availability is included in the calculation.
2) The typical scanning range indicates a range in which the ESPE functions perfectly and reliably under industrial conditions. The level of signal reserve is enough to ensure high availability.
3) The setting is only possible via software configuration.

Table 16: Resulting ranges with manual setting of the protective field width (full transmitting power, resolution 30 mm)

Configuration	Resulting range for the protective field width	
	Minimum [1]	Typical [2]
Very small range [3]	0 m ... 4.2 m	0 m ... 5.3 m
Small range	0 m ... 6 m	0 m ... 7.5 m
Medium range	0 m ... 12 m	0 m ... 15 m
Large range	0 m ... 24 m	0 m ... 30 m

1) The minimum scanning range specifies a range in which a function is guaranteed to operate correctly and safely under industrial conditions. A sufficient level of signal reserve to ensure very high availability is included in the calculation.
2) The typical scanning range indicates a range in which the ESPE functions perfectly and reliably under industrial conditions. The level of signal reserve is enough to ensure high availability.
3) The setting is only possible via software configuration.

Table 17: Resulting ranges with manual setting of the protective field width (reduced transmitting power, resolution 30 mm)

Configuration	Resulting range for the protective field width	
	Minimum [1]	Typical [2]
Very small range [3]	0 m ... 2.1 m	0 m ... 2.7 m
Small range	0 m ... 3 m	0 m ... 3.8 m
Medium range [3]	0 m ... 6 m	0 m ... 7.5 m

Configuration	Resulting range for the protective field width	
	Minimum [1]	Typical [2]
Large range [3]	0 m ... 12 m	0 m ... 15 m

1) The minimum scanning range specifies a range in which a function is guaranteed to operate correctly and safely under industrial conditions. A sufficient level of signal reserve to ensure very high availability is included in the calculation.
2) The typical scanning range indicates a range in which the ESPE functions perfectly and reliably under industrial conditions. The level of signal reserve is enough to ensure high availability.
3) The setting is only possible via software configuration.

Further topics

- "Minimum distance from reflective surfaces", page 32
- "Minimum distance to identical systems", page 38
- "Transmitting power adjustment", page 38
- "Using a sender with a small scanning range", page 38

4.3.2 Minimum distance of the safety light curtain to the hazardous point

Overview

A minimum distance must be maintained between the safety light curtain and the hazardous point. This distance is required to prevent a person or part of their body from reaching the hazardous point before the end of the machine's dangerous state.

The calculation of the minimum distance is based on international or national standards and statutory requirements applicable at the place of installation of the machine. Among other things, the approach speed of persons, the response time and the specific characteristics of the safety light curtain must be taken into account, as described, for example, in the current version of ISO 13855.

Important information

DANGER

Minimum distance from the hazardous point is too small

The dangerous state of the machine may not be stopped or not be stopped in a timely manner due to a minimum distance that is too small.

→ Calculate the minimum distances for the machine in which the safety light curtain is integrated.
→ When mounting the safety light curtain, observe the minimum distance.

NOTE

Both reduced resolution and blanking with size tolerance change the effective resolution of the safety light curtain and must be taken into account when calculating the minimum distance.

The lowest effective resolution must always be taken into account when calculating the minimum distance to the hazardous point.

NOTE

If the Smart Box Detection function is configured on the safety light curtain, additional information must be taken into account when calculating the minimum distance, see "Minimum distance to the hazardous point with Smart Box Detection", page 67.

NOTE
If the object pattern recognition function is configured on the safety light curtain, additional information must be taken into account when calculating the minimum distance, see "Minimum distance to hazardous point for object pattern recognition", page 101.

Complementary information

If you use the inputs for safety sensors (SDI) on the DMM4 extension module for an additional protective device, you must calculate an appropriate minimum distance for the protective device used and take into account the response time for SDI. The information in this section only applies to the safety light curtain.

Further information can be found in the Guide for Safe Machinery.

SICK offers a stopping/run-down time measurement service in many countries.

Further topics

- "Response time", page 238

4.3.3 Minimum distance from reflective surfaces

Overview

The light beams from the sender may be deflected by reflective surfaces and dispersive media. This can prevent an object from being detected.

Therefore, all reflective surfaces and objects (e.g., material bins, machine table, etc.) must maintain a minimum distance (a) from the protective field. This minimum distance (a) must be maintained on all sides of the protective field. This applies in horizontal, vertical and diagonal directions as well as at the end of the safety light curtain. The same area must be free of dispersive media (e.g., dust, fog, or smoke).

The minimum distance (a) depends on the distance (D) between sender and receiver (protective field width).

The weld spark guard can influence the optical properties of the safety light curtain, meaning that reflective surfaces have to observe a larger minimum distance.

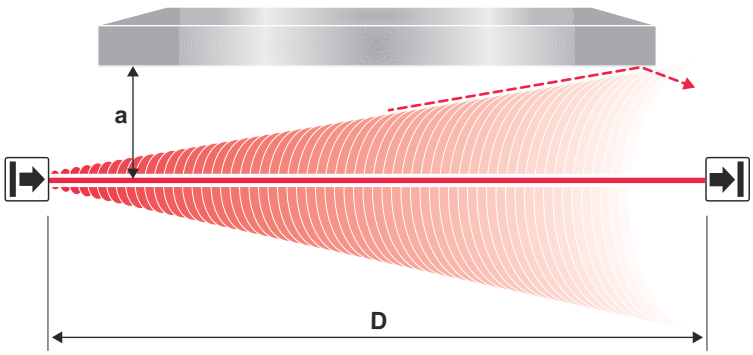

Figure 12: Minimum distance from reflective surfaces

Important information

DANGER

Hazard due to lack of effectiveness of the protective device

Reflective surfaces and dispersive media can prevent persons or parts of the body to be protected from being properly reflected and therefore, they remain undetected.

→ Make sure that all reflective surfaces and objects maintain a minimum distance from the protective field.
→ Ensure that no reflective objects are in the protective field.
→ Make sure that no dispersive media (e.g., dust, fog, or smoke) are within the calculated minimum distance from the protective field.
→ Ensure that the correct formula is used for the calculation of the minimum distance.
→ Ensure that the minimum distance to reflective surfaces is recalculated after a change in the maximum protective field width or the transmitting power.

Determining minimum distance from reflective surfaces with automatic calibration of the protective field width

The minimum distance can be determined as follows:

→ Determine the distance between the sender and receiver D in meters (m).
→ Read the minimum distance a in millimeters (mm) from the graph or calculate it using the respective formula to determine the minimum distance to reflective surfaces:

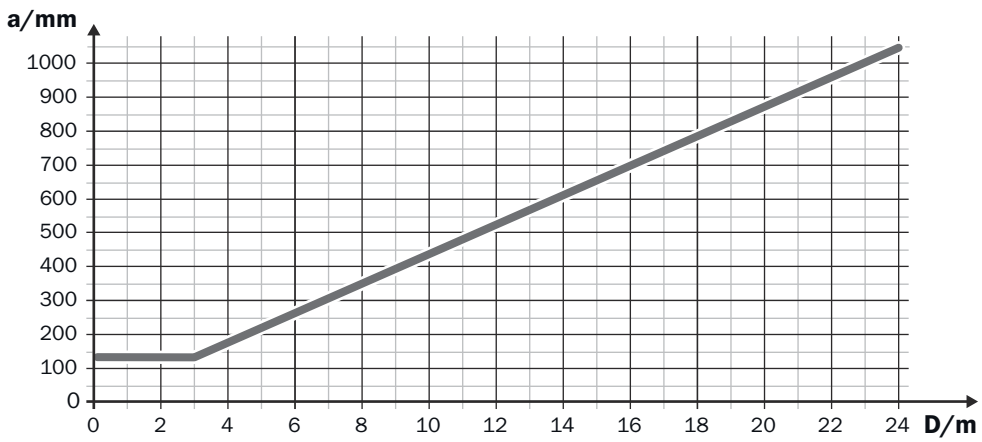

Figure 13: Graph of minimum distance from reflective surfaces

Table 18: Formula for calculating the minimum distance to reflective surfaces with automatic calibration of the protective field width

Distance D between sender and receiver in m	Calculation of the minimum distance (a) to reflective surfaces in mm
D ≤ 3 m	a = 131 mm
D > 3 m	a = tan (2.5°) × 1,000 mm/m × D = 43.66 × 1 mm/m × D

Determining the minimum distance to reflective surfaces when manually setting the protective field width

The minimum distance can be determined as follows:

→ Determine the distance between the sender and receiver D in meters (m).
→ Take into consideration the resulting range for the protective field width.
→ Calculate the minimum distance a in millimeters (mm) using the relevant formula.

The resulting range for the protective field width depends on the following factors:

- Resolution
- Manual adjustment of the protective field width
- Transmitting power

Table 19: Formula for calculating the minimum distance to reflective surfaces when manually setting the protective field width (resolution 14 mm)

Configuration	Resulting range for the protective field width	Distance D between sender and receiver in m	Calculation of the minimum distance (a) to reflective surfaces in mm
Very small range with reduced transmitting power	0.15 m ... 1.4 m		a = 131 mm
Small range with reduced transmitting power	0.15 m ... 2 m		a = 131 mm
Very small range with full transmitting power	0.15 m ... 2.8 m		a = 131 mm
Small range with full transmitting power Medium range with reduced transmitting power	0.15 m ... 4 m	D ≤ 3 m	a = 131 mm
		D > 3 m	a = tan (2.5°) × 1,000 mm/m × D = 43.66 × 1 mm/m × D
Medium range with full transmitting power Large range with reduced transmitting power	1 m ... 8 m	D ≤ 4 m	a = 175 mm
		D > 4 m	a = tan (2.5°) × 1,000 mm/m × D = 43.66 × 1 mm/m × D
Large range with full transmitting power	2 m ... 16 m	D ≤ 8 m	a = 350 mm
		D > 8 m	a = tan (2.5°) × 1,000 mm/m × D = 43.66 × 1 mm/m × D

Table 20: Formula for calculating the minimum distance to reflective surfaces when manually setting the protective field width (resolution 30 mm)

Configuration	Resulting range for the protective field width	Distance D between sender and receiver in m	Calculation of the minimum distance (a) to reflective surfaces in mm
Very small range with reduced transmitting power	0 m ... 2.1 m		a = 131 mm
Small range with reduced transmitting power	0 m ... 3 m		a = 131 mm
Very small range with full transmitting power	0 m ... 4.2 m	D ≤ 3 m	a = 131 mm
		D > 3 m	a = tan (2.5°) × 1,000 mm/m × D = 43.66 × 1 mm/m × D
Small range with full transmitting power Medium range with reduced transmitting power	0 m ... 6 m	D ≤ 3 m	a = 131 mm
		D > 3 m	a = tan (2.5°) × 1,000 mm/m × D = 43.66 × 1 mm/m × D
Medium range with full transmitting power Large range with reduced transmitting power	0 m ... 12 m	D ≤ 6 m	a = 262 mm
		D > 6 m	a = tan (2.5°) × 1,000 mm/m × D = 43.66 × 1 mm/m × D
Large range with full transmitting power	0 m ... 24 m	D ≤ 12 m	a = 524 mm
		D > 12 m	a = tan (2.5°) × 1,000 mm/m × D = 43.66 × 1 mm/m × D

Further topics

- "Weld spark guard", page 263

4.3.4 Protection against interference from systems in close proximity to each other

Overview

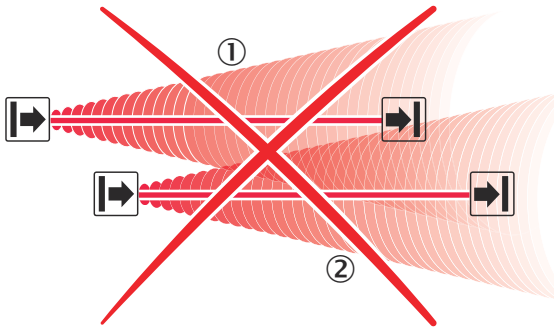

Figure 14: Preventing mutual interference of system ① and system ②

The infrared light beams of the sender of system ① can interfere with the receiver of system ②. This can disrupt the protective function of system ②. This would mean that the operator is at risk.

Important information

DANGER
Hazard due to lack of effectiveness of the protective device

The integrated laser alignment aid may influence the receiver of an ESPE in close proximity. In such cases, the neighboring ESPE may not detect persons or parts of the body that require protection.

→ Perform an alignment or take other measures to ensure that the laser beam only hits the front screen of the relevant receiver. The laser beam must not hit any external receiver should the integrated laser alignment aid be switched on by mistake or due to a fault. An external receiver is a receiver that is not part of the same ESPE or same cascade.
→ During alignment in particular, make sure that the laser beam does not hit any external receiver.

DANGER
Hazard due to lack of effectiveness of the protective device

Systems of electro-sensitive protective devices (ESPE) that operate in close proximity to each other can mutually interfere with each other.

→ Use suitable measures to prevent interference between systems in close proximity to each other.

Preventing interference between systems in close proximity to each other

The following measures prevent interference from systems in close proximity:

- Different beam coding for neighboring systems
- Reversed direction of transmission for neighboring systems
- Manual adjustment of the protective field width
- Reduced transmitting power (or sender with small scanning range)
- Optically opaque partitions

Further topics

- "Using beam coding", page 36
- "Using reversed direction of transmission", page 37
- "Using a sender with a small scanning range", page 38

4.3.4.1 Using beam coding

Overview

Depending on the configuration, the ESPE operates with 1 of 3 beam codings: Uncoded, code 1 or code 2. Uncoded beam coding enables particularly short response times, but offers no protection against interference from nearby systems. To avoid mutual interference between two neighboring systems, one can be operated with code 1 and the other with code 2.

Important information

DANGER
Hazard due to lack of effectiveness of the protective device

A system with the Uncoded beam coding can be influenced by senders with code 1 or code 2.

A system with code 1 or code 2 can be influenced by senders with the Uncoded beam coding.

Systems with the same beam coding can mutually interfere with each other.

→ If systems are in close proximity to each other, only use code 1 and code 2.

Using beam coding

Use suitable beam codings to prevent mutual interference from neighboring systems.

→ Configure one system with code 1 and the other system with code 2.

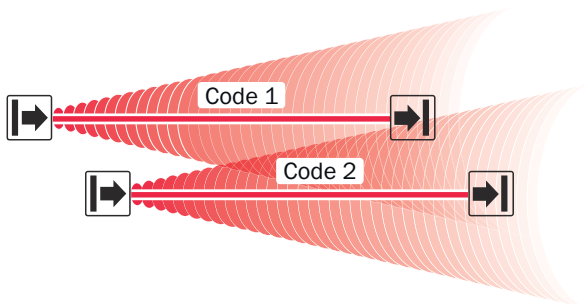

Figure 15: Trouble-free operation due to beam coding

In the figure, the beam coding of systems in close proximity to each other is different. This means that the systems do not influence each other.

Complementary information

Coded systems of the following products do not interfere with each other:

- deTec4
- deTem4
- deTem4 A/P
- C4000
- M4000

In the case of systems in close proximity that are of a different product group, different measures must be taken to prevent mutual interference.

Further topics

- "Configuring beam coding", page 153
- "Combining beam coding and reversed direction of transmission", page 37

4.3.4.2 Using reversed direction of transmission

Using reversed direction of transmission

The direction of transmission of the system ② can be changed during mounting by switching the positions of the sender and receiver. With reversed direction of mounting, the receiver ② is not affected by the infrared light from the sender ①.

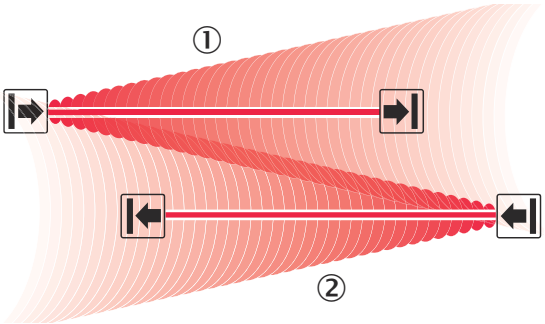

Figure 16: Trouble-free operation due to reversed direction of transmission of system ① and system ②

Further topics

- "Combining beam coding and reversed direction of transmission", page 37

4.3.4.3 Combining beam coding and reversed direction of transmission

To prevent a mutual interference in the case of more than two neighboring systems, beam coding and reversed direction of transmission can be combined.

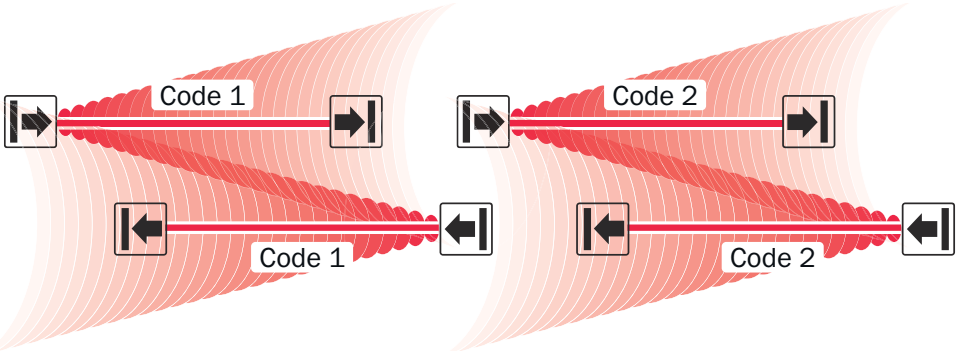

Figure 17: Trouble-free operation of 4 neighboring systems due to beam coding and reversed direction of transmission

In the figure, the beam coding of the systems arranged next to each other is different. The direction of transmission of the systems arranged on top of each other is reversed. This ensures the systems do not mutually interfere with each other.

4.3.4.4 Transmitting power adjustment

Overview

You can manually adjust the power of the sender.

The following settings are possible:

- Full transmitting power
- Reduced transmitting power

You can use the reduced transmitting power to reduce the interference of systems in close proximity to each other.

The reduced transmitting power is only possible if the protective field width is set manually. Only the full transmitting power can be used for automatic calibration of the protective field width.

Prerequisites

- Function package DMM4
- Software configuration
- For the reduced transmitting power: Manual setting of the protective field width

4.3.4.5 Using a sender with a small scanning range

Overview

To prevent mutual interference of systems arranged in a row, a sender with a small scanning range can be used. A sender with a small scanning range has a reduced transmitting power as the factory setting.

A sender with a small scanning range can only be used if the protective field width is set manually. If the protective field width is calibrated automatically, the sender with a small scanning range cannot be used.

Prerequisites

- Manual adjustment of the protective field width
- The same sender types must be used in a cascade.

Further topics

- "Manual adjustment of the protective field width", page 29
- "Minimum distance to identical systems", page 38
- "Configuring the protective field width", page 157
- "Ordering information", page 260

4.3.4.6 Minimum distance to identical systems

Systems operating in close proximity to each other can mutually interfere with each other. If interference cannot be prevented by suitable measures, e.g., by using different beam coding or opaque partitions, a sufficient distance must be maintained between systems.

For identically configured systems in the same sender direction, the minimum distance for interference-free operation is defined as follows: The minimum distance B between the sender of a first system and the receiver of an identically configured second system is three times the maximum possible protective field width.

Identically configured means:

- Identical resolution
- Identical beam coding

- Identical setting for the protective field width (automatic calibration of the protective field width or identical range with manual setting of the protective field width)
- Identical transmitting power

Figure 18: Trouble-free operation with sufficient distance

① System 1

② System 2

B Minimum distance between sender of the first system and identically configured receiver of the second system with the same direction of transmission

4.3.5 Reduced resolution

Overview

With a reduced resolution, adjacent light beams can be interrupted without the OSSDs switching to the OFF state.

As a result, smaller objects can move into the detection area of the safety light curtain without the curtain reacting and the machine switching off. The objects do not have to be permanently in the protective field.

The reduced resolution can be used for suppressing interference objects, if, for instance, cables or hoses need to be routed through the protective field.

The function is available in 2 variants:

- Reduced resolution (Basic)

  The resolution of the safeguard can be reduced by several light beams.
- Reduced resolution (Advanced)

  The resolution of the safeguard can be individually reduced in up to 4 areas in the protective field. The size of the protective field areas is configurable.

The following applies for horizontal protective field alignment:

- For devices with a physical resolution of 14 mm, the resolution can be reduced by a maximum of 10 beams.
- For devices with a physical resolution of 30 mm, the resolution can be reduced by a maximum of 3 beams.

Important information

NOTE

If the safety light curtain is configured with a reduced resolution, then the minimum distance must be calculated according to the effective resolution, for example as described in the current version of ISO 13855.

If the safety light curtain is configured with a reduced resolution, then it must be ensured that persons are reliably detected in the protective field.

→ For vertical protective field alignment, take into account the increased hazard with an effective resolution of more than 200 mm.

→ For horizontal protective field alignment, calculate the minimum distance to the hazardous point and the minimum protective field height [2)] and mounting height of the safeguard taking into account the effective resolution.

NOTE
If a reduced resolution and automatic calibration of the protective field width is configured, no objects can be in the protective field upon activation. Otherwise, this may influence the automatic calibration of the protective field width.

NOTE
If reduced resolution and Smart Box Detection are configured, different effective resolutions apply to the safety light curtain, see "Effective resolution with Smart Box Detection", page 68.

Effective resolution with reduced resolution

The effective resolution of the safety light curtain changes due to the reduced resolution. Objects up to a certain size can move in the detection zone of the safety light curtain without the machine switching off.

Table 21: Effective resolution with reduced resolution

Physical resolution	Reduction	Effective resolution	Maximum size of ignored objects
14 mm	1 beam	24 mm	10 mm
	2 beams	34 mm	20 mm
	n beams	14 mm + n * 10 mm	n * 10 mm
30 mm	1 beam	55 mm	25 mm
	2 beams	80 mm	50 mm
	n beams	30 mm + n * 25 mm	n * 25 mm

Further topics

- "Minimum distance of the safety light curtain to the hazardous point", page 31
- "Minimum distance from reflective surfaces", page 32
- "Additional accessories", page 273

4.3.5.1 Reduced resolution (Basic)

Overview

The reduced resolution (Basic) affects the entire protective field.

The number of ignored objects in the protective field is not limited by the reduced resolution.

It is only possible to configure more than 2 beams via software configuration.

With a reduced resolution with more than 2 beams, the total response time of the system changes.

For devices with functional scope V 1.3.0 or higher, the following applies:

- For devices with a physical resolution of 14 mm, the resolution can be reduced by a maximum of 28 beams.
- For devices with a physical resolution of 30 mm, the resolution can be reduced by a maximum of 10 beams.

Prerequisites

- Function package SP2 or DMM4 or DCM4

2) The protective field height is a fixed property of the device. For a horizontal protective field alignment, this device property determines how long the protective field is.

Further topics

- "Minimum distance of the safety light curtain to the hazardous point", page 31
- "Additional accessories", page 273

4.3.5.2 Reduced resolution (Advanced)

Overview

With reduced resolution (Advanced), you can individually reduce the resolution in up to 4 areas of the protective field.

Prerequisites

- Function package DCM4
- Software configuration

Functionality

In the configured areas, objects can move within the detection zone of the safety light curtain without the OSSDs switching to the OFF state.

The areas must not overlap and can be next to each other without any space between them.

Objects that move in a configured area and are equal or smaller in size than the reduced resolution set in that area are ignored by the safeguard. The OSSDs remain in the ON state.

All objects that are equal to or larger than the physical resolution or move outside the configured area are detected by the safeguard and the machine is switched off.

The following applies to reduced resolution (Advanced):

- Up to 4 areas of configurable size can be configured within a protective field.
- The number of beams for the reduced resolution can be configured for each area.
- The number of ignored objects that can move or stay within an area at the same time can be limited via the configuration for each area.
- The reduced resolution can be individually configured for all devices in a cascade.
- The total response time of the system changes when reduced resolution (Advanced) is configured. To prevent an impact on the total response time, the multiple sampling for the configured areas can be reduced by one scan.
- A distance of at least one beam must be maintained between ignored objects throughout the entire protective field. This also applies at the border between two areas.

Effective resolution with reduced resolution (Advanced)

The effective resolution in the various areas of the protective field changes due to the reduced resolution. The effective resolution may also be different in configured operating modes.

The lowest effective resolution must be taken into account when calculating the minimum distance to the hazardous point.

Further topics

- "Testing plan", page 124

4.3.5.3 Operating modes for reduced resolution (Advanced)

Overview

You can use the Safety Designer configuration software to configure operating modes with a reduced resolution (Advanced).

To do this, create at least two standard operating modes and change the settings for each of the standard operating modes.

The following settings can be individually configured for each mode:

- Activation or deactivation of reduced resolution (Advanced)
- Configuration of multiple sampling reduced by one scan for the evaluation of the areas
- Configuration of the areas with reduced resolution (Advanced) incl. the associated parameters

If you create more than one standard configuration, you can specify whether a global or individual configuration should be used for the reduced resolution (Advanced). This can be useful when combining several functions for operating modes.

Prerequisites

- Function package DCM4
- Software configuration

Conditions for switching to an operating mode with reduced resolution

No conditions need to be taken into account when switching to an operating mode with reduced resolution.

Further topics

- "Operating modes", page 82

4.3.6 Muting

Overview

Muting according to IEC 62046 temporarily bypasses the protective action of the protective device so that material can be transported to or from a machine or system. As a result, the work process remains uninterrupted.

The distinction between people and materials is made by at least 2 signals that are independent of each other. Based on the logical evaluation of these signals, the protective device is bypassed if a valid muting condition is present. As soon as something other than material enters the hazardous area, the work process is interrupted.

Prerequisites

- Function package SP2 or DMM4 or DCM4
- Muting may only be activated during the period in which the material to be transported (e.g. on a pallet) is blocking access to the hazardous area.
- Muting shall be automatic, i.e., not manual.
- Muting must not depend on a single electrical signal.
- Muting must be triggered by at least 2 signals wired independently of each other (e.g. by muting sensors).
- Before each new muting cycle, both muting signals of a sensor pair must be deactivated at the same time, otherwise muting will not be activated. When 4-signal muting is configured, the signals of the sensor pair must each be deactivated, but not necessarily at the same time.
- Muting must not depend entirely on software signals (e.g. from a PLC).

- Muting must be reversed after the material has passed through in order that the protective device becomes effective again.
- The material to be transported must be detected above a certain length, i.e., an interruption of the muting signals must not last longer than the configured sensor gap monitoring.
- Attach muting sensors as appropriate to prevent muting from being unintentionally triggered by a person or means of transport.

4.3.6.1 Muting sensors

Overview

Muting sensors detect material and supply the signals required by an evaluation unit for the logical linking.

Muting signals can be generated in the following ways:

- Optical sensors
- Inductive sensors
- Mechanical switches
- Controller signals

When the system is switched on, all muting signals must be deactivated at the same time, otherwise muting will not be activated.

Arranging muting sensors

The following is to be observed in the arrangement of muting sensors:

- Muting sensors must be arranged so that only the material is detected and not the means of transport or conveyor (vehicle or pallet).
- Muting sensors must be arranged so that material can pass the ESPE unimpeded, although persons are safely detected by the ESPE.
- Muting sensors must be arranged so that they detect the material with a minimum distance in front of the ESPE. The minimum distance ensures the required processing time until muting is activated.
- If both muting signals are present at the extension connection of the receiver and no muting connector or IO-Link connector is used, the muting sensors must be arranged so that the signals arrive at the device at different times (at least 50 ms apart).

4.3.6.2 Muting arms

Overview

The muting sensors can be mounted on muting arms.

Depending on the variant, a maximum of 2 muting sensors can be mounted on one muting arm.

Further topics

- "Muting accessories", page 271

4.3.6.3 Muting variants

4.3.6.3.1 Cross muting

Overview

For muting using a crossed arrangement of the muting sensors, material can move either from left to right or from right to left, i.e., material flow is possible in both directions.

Arrangement of the muting sensors

→ Place the crossing point of the muting sensors directly on the path of the beams of the ESPE.
→ If this is not possible, place the crossing point in the direction of the hazardous area.

The muting sensor signals can be present at the following inputs:

- In1 and In2 on the extension connection of the receiver (or via the muting connector or IO-Link connector on the extension connection)
- In2 at the extension connection of the receiver and In4 at the M12, 8-pin system connection
- In5 at the A1 connection and In6 at the A2 connection of the DMM4 extension module

The muting sensor signals can only ever be present at exactly one of the possible connection combinations.

Functionality

Once muting sensors A1 and A2 are actuated, muting is active.

Muting remains active until one of the muting sensors becomes clear. When configured via Safety Designer, muting can also be deactivated when the ESPE becomes free.

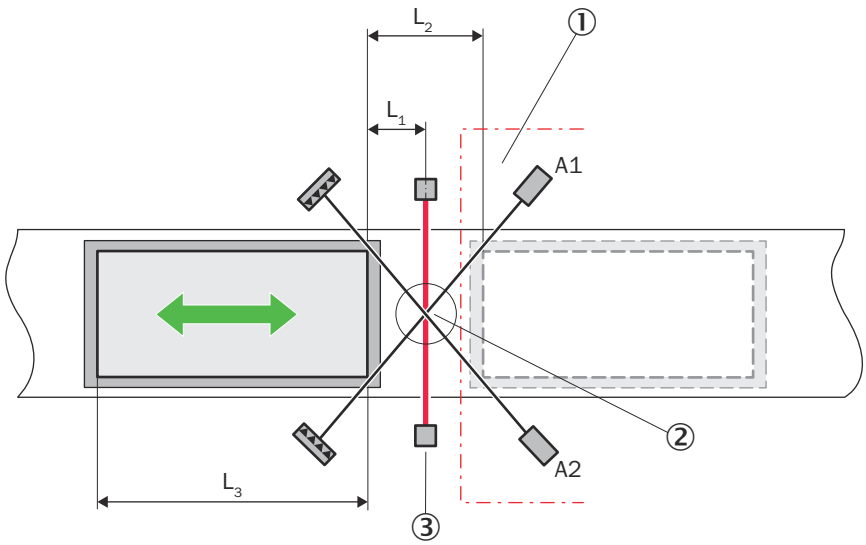

Figure 19: Cross muting

① Hazardous area

② Crossing point for the muting sensors

③ ESPE

Calculate minimum distance

Minimum distance when connecting the muting sensors to the receiver (without muting connector or IO-Link connector):

- $L_1 \geq v \times 0.060$ s

Minimum distance when connecting the muting sensors to the receiver (with muting connector or IO-Link connector):

- $L_1 \geq v \times 0.122$ s

Minimum distance when connecting the muting sensors to the DMM4 extension module:

- $L_1 \geq v \times 0.100$ s

Where:

- L_1 = Distance between the light beams of the ESPE and the detection of the muting sensors in m
- v = Speed of the material (e.g., material on a conveyor belt in m/s)

Further topics

- "Data sheet", page 232
- "Cross-circuit monitoring", page 53
- "Muting end by ESPE", page 51

4.3.6.3.2 Exit monitoring

Overview

Exit monitoring checks that only material moves out of the hazardous area, while persons cannot enter the dangerous area.

Arrangement of the muting sensors

The muting sensors must be arranged in such a way that only the material is detected and not the transport or conveying aid (vehicle or pallet). The entire length of the material must be detected by the sensors or the ESPE. There may not be any detectable gaps, otherwise muting is ended too soon (reduced system availability). To increase the availability of the system, any gaps present until the time set for sensor gap monitoring are ignored.

→ Position muting sensors on the side of the hazardous area.

NOTE
Prevent mutual sensor interference.

The muting sensor signals can be present at the following inputs:

- In1 and In2 on the extension connection of the receiver (or via the muting connector or IO-Link connector on the extension connection)
- In2 at the extension connection of the receiver and In4 at the M12, 8-pin system connection
- In5 at the A1 connection and In6 at the A2 connection of the DMM4 extension module

The muting sensor signals can only ever be present at exactly one of the possible connection combinations.

Functionality

The muting sensors (A1 and A2) are arranged serially in the hazardous area and detect material before it passes through the ESPE ②.

Once muting sensors A1 and A2 are actuated, muting is active.

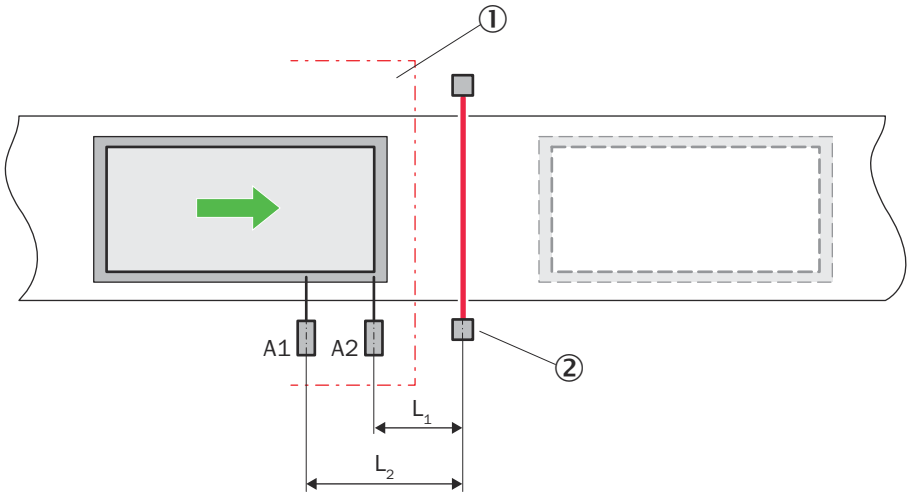

Figure 20: Exit monitoring

① Hazardous area

② ESPE

Calculate minimum distance

Minimum distance when connecting the muting sensors to the receiver (without muting connector or IO-Link connector):

- $L_1 \geq v \times 0.060$ s
- $v \times t > L_2$

Minimum distance when connecting the muting sensors to the receiver (with muting connector or IO-Link connector):

- $L_1 \geq v \times 0.122$ s
- $v \times t > L_2$

Minimum distance when connecting the muting sensors to the DMM4 extension module:

- $L_1 \geq v \times 0.100$ s
- $v \times t > L_2$

Where:

- L_1 = Distance between the light beams of the ESPE and the detection of the muting sensor A2 in m; $L_1 < 0.2$ m
- v = Speed of the material (e.g. of the conveyor belt) in m/s
- t = Muting hold time in s
- L_2 = Distance between the light beams of the ESPE and the detection of the muting sensor A1 in m

Complementary information

For exit monitoring, the Muting end by ESPE function should be used. The function is activated automatically when configuring via the SP2 system plug. If the Muting end by ESPE function cannot be used reliably, the total muting time should be monitored.

Further topics

- "Cross-circuit monitoring", page 53
- "Data sheet", page 232

4.3.6.3.3 Entry/exit monitoring

Overview

When using entry/exit monitoring, materials can be transported both out of a hazardous area and into a hazardous area without interrupting the work process. As soon as something other than material enters the hazardous area, the work process is interrupted.

The muting sensors can be arranged for serial or parallel entry/exit monitoring.

NOTE
If the muting sensors are arranged in parallel, sequence detection must not be configured. This reduces the availability of the system.

Prerequisites

- Function package DMM4
- Software configuration

Arrangement of the muting sensors

The muting sensors must be arranged in such a way that only the material is detected and not the transport or conveying aid (vehicle or pallet). The entire length of the material must be detected by the sensors or the ESPE. There cannot be any detectable gaps, otherwise muting is ended too soon (reduced system availability).

Alternatively, sensor gap monitoring can be configured to increase the availability of the system.

NOTE
Prevent mutual sensor interference.

The muting sensor signals are present at the following inputs:

- In5 on the A1 connection of the DMM4 extension module
- In6 on the A2 connection of the DMM4 extension module
- In7 on the B1 connection of the DMM4 extension module
- In8 on the B2 connection of the DMM4 extension module

Functionality

The muting sensors are arranged in series or in parallel on the left and right of the ESPE and detect the material before it passes through the ESPE (②). The material can be transported either into the hazardous area (①) or out of the hazardous area.

When the sensors are arranged in parallel, the position of the muting sensors is also used to monitor the width of the permissible object. The objects must always pass the muting sensors with the same width. Optical pushbuttons and all types of non-optical sensors can be used in this arrangement. Use sensors and sensing devices with background suppression.

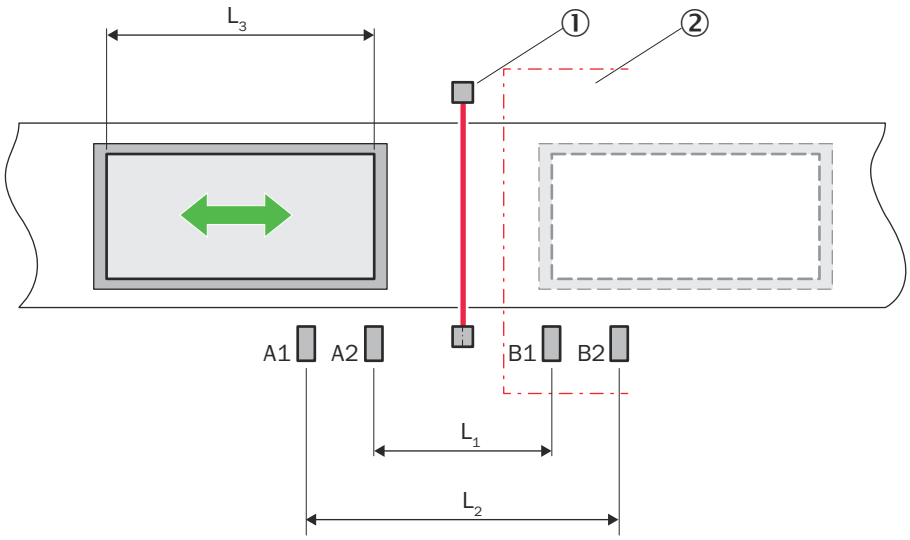

Figure 21: Serial arrangement of the muting sensors

① ESPE

② Hazardous area

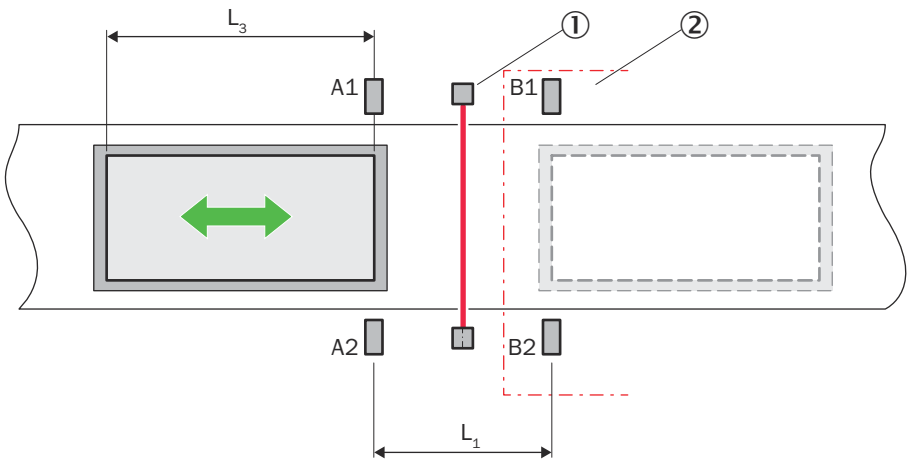

Figure 22: Parallel arrangement of the muting sensors

① ESPE

② Hazardous area

Table 22: Conditions for entry/exit monitoring

Condition	Description
A1 & A2 (or B1 & B2)	Two muting sensors of a muting sensor pair are activated to start muting. The first muting sensor pair is activated according to the direction in which the material is being transported.
A1 & A2 & B1 & B2	All four muting sensors are activated briefly to accept the muting condition.
B1 & B2 (or A1 & A2)	Muting applies for as long as this condition remains fulfilled. The second muting sensor pair is activated according to the direction in which the material is being transported.

Calculate minimum distance

$L_1 \geq v \times 2 \times 0.100$ s

$L_2 < L_3$

Where:

- L_1 = Distance of the inner muting sensors (arrangement symmetrical to the light beams of the ESPE) in m; $L_1 < 0.4$ m (2 x 0.2 m)
- v = Speed of the material (e.g. of the conveyor belt) in m/s
- L_2 = Distance of the outer muting sensors (arrangement symmetrical to the light beams of the ESPE) in m; $L_2 - L_1 > 0.5$ m (2 x 0.25 m)
- L_3 = Length of the material in conveying direction in m

4.3.6.4 Override

Overview

An override is a manual muting triggering after an error in the muting conditions. The protective device is bypassed and the system can be cleared and an error-free status can be achieved.

When configuring via the SP2 system plug, override is always active if muting has been configured. The signal for override is then present at the In3 connection.

When configured via Safety Designer, the override signal can be present at one of the following inputs:

- In2 at the extension connection of the receiver
- In3 at the M12, 8-pin system connection
- In9 or In10 at the X1 connection of the DMM4 extension module

The override signal can only ever be present at exactly one of the possible connections.

In addition, the reset signal can be configured on the In2, In3 or In10 inputs in order to use the combined reset/override function.

The following time monitoring and muting functions remain active during override:

- Total muting time
- Sensor gap monitoring
- Muting holding time
- Muting end delay for muting end by ESPE
- Belt stop

Important information

NOTE

If automatic calibration of the protective field width is configured and the protective field is interrupted when the ESPE is switched on, the system changes to the "Override required" status if the override conditions are met. If override is performed, the OSSDs change to the OFF state again after the protective field frees up again, if necessary, until the protective field width is automatically measured.

Set the protective field width manually to bypass the behavior.

Prerequisites

- The override control switch is mounted outside of the hazardous area so that it cannot be actuated by a person that is inside the hazardous area.
- The operator can oversee the entire hazardous area when actuating the control switch.

Performing an override with the integrated override function

An error occurs while a muting condition is valid. The cause of the error is indicated by the LEDs on the receiver.

At the same time, the output signal switching devices (OSSDs) switch to the OFF state. The system is in the "Override required" status and waits for the operator to actuate the override control switch or for the cause to be remedied, e.g. for the belt to be cleared.

The "Override required" status is only triggered by the system if the following conditions are met:

- An error occurs, muting is deactivated or is ended.
- At least one muting signal is active.
- The ESPE is interrupted by an object.

Performing an override

The system is in the "Override required" status after an error. Muting can only continue at the point where it was interrupted if the operator starts the integrated override function using the control switch. Then, the output signal switching devices (OSSDs) change to the ON state and the system monitors the override status.

If the override status is exited and reset is configured, no additional reset sequence is required provided the switching outputs (OSSDs) are allowed to remain active.

The maximum duration for override is limited by the total muting time.

Monitoring override states

For safety reasons, the number of consecutive override statuses is limited. The system resets the counter in the following cases:

- After an error-free muting cycle without override
- Each time the system is started
- When resetting muting (change of muting mode, change to OSSD OFF mode, SDI switch-off, laser alignment aid switched on, blanked object not detected as expected)

When configuring via the SP2 system plug, the number of consecutive overrides is set to 5.

The number of consecutive overrides can be customized via Safety Designer.

If the permitted number of override statuses has been exceeded, the system then switches to the lockout status and displays an error message.

4.3.6.5 Time monitoring

4.3.6.5.1 Muting hold time

The muting hold time can only be used in combination with the exit monitoring muting variant.

If one of the muting sensors in the hazardous area becomes free and the sensor gap monitoring has been exceeded, the muting hold time begins. The protective effect of the ESPE is bypassed during this period and material or a means of transport can pass through the ESPE without the machine being stopped.

When configuring via the SP2 system plug, the muting hold time is set to 4 s.

When configuring via Safety Designer, the muting hold time can be customized. The muting hold time selected should be as short as possible.

Muting or override are ended when the muting hold time has elapsed.

4.3.6.5.2 Muting end by ESPE

Important information

DANGER

Muting end by ESPE delayed or ineffective

If automatic measurement of the protective field width is configured and the protective field is interrupted when the ESPE is switched on for the first time, the Muting end by ESPE function is delayed or ineffective.

→ Set the protective field width manually.

Functionality

With the Muting end by ESPE function, muting or override are ended when the ESPE is clear again (①) and the sensor gap monitoring and the muting end delay have elapsed. This results in a shorter muting time and greater safety at the same time.

When configuring cross muting via the SP2 system plug, muting end is always deactivated by ESPE.

When configuring exit monitoring via the SP2 system plug, Muting end by ESPE is always active and the muting end delay is set to 0.2 s.

When configured via Safety Designer, the muting end condition and the muting end delay can be configured individually.

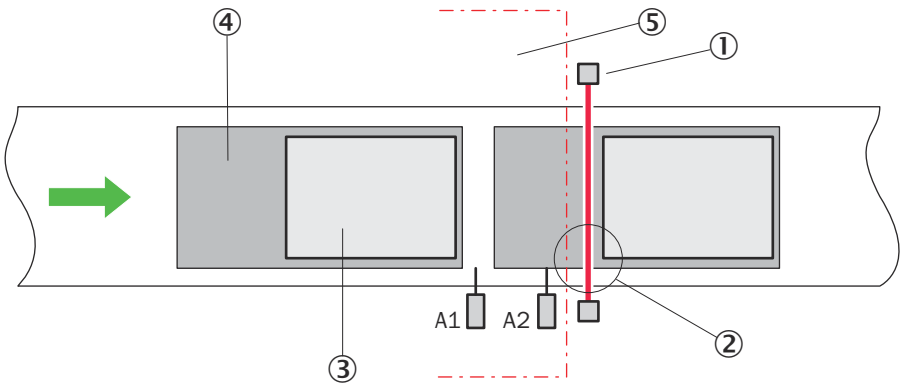

Figure 23: Muting ends as soon as the ESPE is clear again (example for exit monitoring)

① ESPE

② Time at which muting ends

③ Material

④ Transportation equipment

⑤ Hazardous area

The following applies to the muting end by ESPE function:

- The entire length of the material and means of transport must be detected by the muting sensors or the ESPE.
- If the ESPE is clear, muting is ended after the sensor gap monitoring and the muting end delay have elapsed.
- If the light path of the ESPE does not become clear, muting is ended at the latest once the muting condition is no longer satisfied.

4.3.6.5.3 Sensor gap monitoring

Overview

Sensor gap monitoring allows signals from the muting sensors and the Muting end by ESPE function to be ignored for a defined period without removing a valid muting condition.

When configuring via the SP2 system plug, the time for sensor gap monitoring is set to 0.5 s.

When configuring via Safety Designer, the time for sensor gap monitoring can be customized.

Sensor gap monitoring (muting sensor)

If a muting sensor briefly becomes clear, i.e., an object gap is detected, the deactivated muting signal continues to be interpreted as an active signal and muting or override are maintained.

Muting or override are only ended if one of the muting sensors is clear for longer than the configured time period.

The following applies to sensor gap monitoring (muting sensor) for a specific sensor pair

- Only one of the muting sensors may be clear (deactivated) briefly. If the 2nd muting sensor is also clear, muting or override is ended.
- Muting or override are ended if one of the muting sensors is clear (deactivated) for longer than the configured time period.

Sensor gap monitoring (ESPE)

If the ESPE becomes clear for a short time, i.e., an object gap is detected, the clear ESPE continues to be interpreted as interrupted and muting or override are maintained.

Muting or override are only ended if the ESPE is clear for longer than the configured time period.

The following applies to sensor gap monitoring (ESPE):

- Sensor gap monitoring (ESPE) is active in combination with the Muting end by ESPE function.
- The ESPE is allowed to be clear for a short time, i.e. to detect a short object gap.
- Muting or override are only ended if the ESPE is clear for longer than the configured time period.

4.3.6.5.4 Concurrence monitoring

Overview

Concurrence monitoring can be used to improve the protection against manipulation of the safety application (e.g., covering an optical sensor).

When configuring via the SP2 system plug, the duration for concurrence monitoring is set to 24 hours.

When configuring via Safety Designer, the duration of concurrence monitoring can be customized.

Functionality

Concurrence monitoring checks whether both muting sensors are actuated during the configured time period. If a muting signal does not appear within this period, muting is not triggered. Muting can only be triggered again if all muting sensors are clear.

NOTE
When configuring via Safety Designer, concurrence monitoring can be deactivated if a muting cycle of more than 24 hours is required.

The system is then unable to detect external errors.

The resulting risk must be assessed. Suitable measures must be defined (e.g., configuring Muting end by ESPE).

4.3.6.5.5 Total muting time

The total muting time limits the maximum duration of muting or override, i.e., muting or override then end at the latest once the total muting time has elapsed.

When configuring via the SP2 system plug, the total muting time is set to 24 hours.

When configuring via Safety Designer, the total muting time can be customized.

NOTE
When configuring via Safety Designer, the total muting time can be deactivated if a muting cycle of more than 24 hours is required.

The system is then unable to detect external errors.

The resulting risk must be assessed. Suitable measures must be defined (e.g., configuring Muting end by ESPE).

4.3.6.5.6 Cross-circuit monitoring

Overview

If both muting signals are connected to the extension connection of the receiver, the muting signal inputs are monitored for cross-circuits.

The device expects the muting signals to arrive at different times. If the muting signals are detected simultaneously by the device, the OSSDs switch to the OFF state.

→ Arrange the muting sensors so that the muting signals arrive at the device at different times (at least 50 ms apart).

Important information

NOTE
If a muting connector or IO-Link connector is used or one signal is on the system connection and the 2nd signal on the extension connection, the muting sensors do not have to be arranged with an offset.

Further topics

- "Accessories", page 263

4.3.6.6 Direction detection and sequence monitoring

Overview

The conditions for muting can be further restricted using direction detection or sequence monitoring. You can define the direction or the sequence in which the muting sensors must be triggered.

When direction detection is activated, a sensor pair must respond in a specific sequence and be released again. The material can only pass through the protective device in one direction. The sequence of the sensors within a sensor pair is not relevant.

When sequence monitoring is activated, the sensors must respond in a specific sequence and be released again. The material must pass through the protective device completely so that no muting error occurs. The direction can also be defined by configuring the direction detection.

Prerequisites

- Function package DMM4
- Software configuration

Complementary information

Direction detection or sequence monitoring can be activated for the entry/exit monitoring function:

- Import/exit monitoring (four muting sensors A1, A2, B1, B2)

Possible conditions for direction detection

- The A sensors must be activated before the B sensors.
- The B sensors must be activated before the A sensors.

Possible conditions for sequence monitoring

- A1 → A2 → B1 → B2 or B2 → B1 → A2 → A1 (both directions allowed)
- A1 → A2 → B1 → B2
- B2 → B1 → A2 → A1

Direction or sequence monitoring cannot be used for cross-muting or exit monitoring.

Sequence monitoring cannot be configured for entry/exit monitoring if the muting sensors are arranged in parallel.

Muting is deactivated if direction detection is configured but the muting sensors are not activated according to the configuration.

4.3.6.7 Muting release

Overview

The protective device has an internal muting release. The muting release function can be configured during commissioning via Safety Designer.

The muting release function is an supplementary signal from an external source that is only used for muting release and is required for each muting cycle.

The muting release supplementary signal can be a control signal from a PLC or another sensor, but not a static signal.

When using the supplementary signal for muting release, the safety integrity for muting must not depend solely on this signal.

The muting release signal can be present at one of the following inputs:

- In1 or In2 on the extension connection of the receiver
- In3 or In4 on the M12, 8-pin system connection
- In10 at the X1 connection or In12 at the X2 connection of the DMM4 extension module

The muting release signal can only ever be present at exactly one of the possible inputs.

For non-safety-related use of the Muting release function, this can also be controlled via IO-Link.

Prerequisites

- Software configuration

Functionality

For each muting object, the system checks whether there is a valid condition for the supplementary signal at the input of the supplementary signal:

Requirements for a valid condition:

- Signal change from LOW to HIGH at the input of the supplementary signal for each valid muting object on a sensor pair AND
- Supplementary signal HIGH when the relevant muting signal changes from LOW to HIGH

If sequence monitoring is configured, the relevant muting signal is the one that is active first (A1 or B2). Otherwise the muting signal that activates muting (both muting signals of a sensor pair active).

As soon as an object is detected by the muting sensors of the first muting sensor pair without a valid condition of the supplementary signal for muting release, muting is not triggered.

To ensure the detection of a valid muting release, the following minimum time must be observed between the LOW to HIGH signal change of the muting release supplementary signal and the LOW to HIGH signal change of the relevant muting sensor:

- Input for supplementary signal on receiver: 5 ms
- Input for supplementary signal on DMM4 extension module: 50 ms
- Input for supplementary signal via IO-Link: 0 ms

The valid condition for muting release is required for each muting object.

For the entry/exit monitoring muting variant, the muting release supplementary signal can also be configured for muting from one direction of the conveyor belt only.

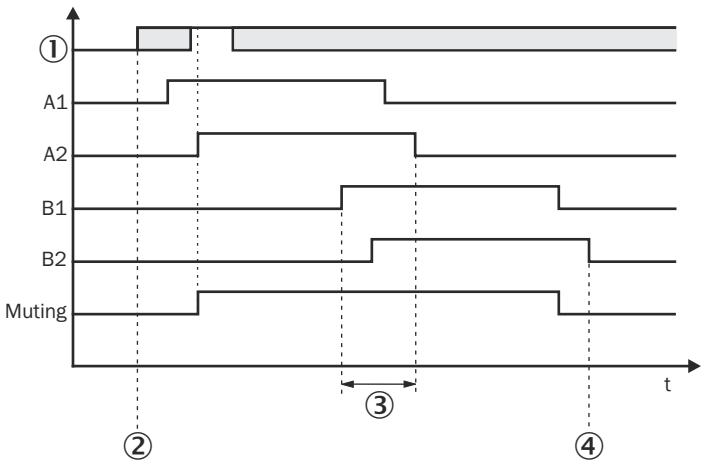

Figure 24: Signal sequence with configured supplementary signal during a muting cycle (example for entry/exit monitoring)

① Supplementary signal

② Start muting cycle

③ Acceptance

④ End muting cycle

4.3.6.8 Partial muting

Overview

The partial muting function can be used to increase safety by keeping defined light beams active when the muting condition is valid.

When configuring partial muting via the SP2 system plug, the upper light beam (far from system plug) remains active by default. All other light beams are temporarily bypassed. As soon as the active light beam is interrupted, the OSSDs switch to the OFF state.

When configuring via Safety Designer, you can define individually for each light beam whether it remains active for the partial muting function (e.g., for a certain object height). As soon as an active light beam is interrupted, the OSSDs switch to the OFF state.

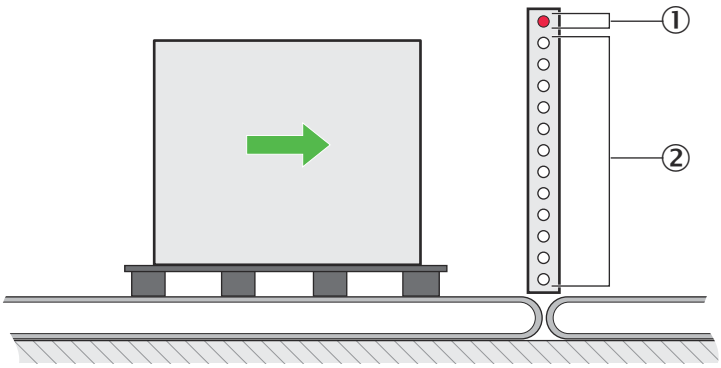

Figure 25: Partial muting

① Active beam

② Deactivated beams

Complementary information

- Even if partial muting is configured, the active light beam can be bypassed by override.
- Partial muting cannot be combined with a reduced resolution.
- You can configure different operating modes with different muting settings.
- The system can switch between muting and partial muting via an external signal.

4.3.6.9 Switching from partial muting to muting

Overview

You can switch between partial muting and muting during operation using a supplementary signal.

Switching can be useful if certain beams cannot remain permanently active, e.g., if the height of the material varies. Switching from partial muting to muting does not interrupt the material flow.

The supplementary signal required for the switchover can be generated by a PLC or another sensor.

When using the supplementary signal for switching from partial muting to muting, the safety integrity for muting must not depend solely on this signal.

The supplementary signal for switching from partial muting to muting can be present at one of the following inputs:

- In1 or In2 on the extension connection of the receiver
- In3 or In4 on the M12, 8-pin system connection
- In10 at the X1 connection or In12 at the X2 connection of the DMM4 extension module

The supplementary signal for switching from partial muting to muting can only ever be present at exactly one of the possible inputs.

For non-safety-related use of the Switching between partial muting and muting function, this can also be controlled via IO-Link.

Prerequisites

- Partial muting
- Software configuration

Functionality

For each muting object, the system checks whether there is a valid condition for switching at the input of the supplementary signal:

Requirements for a valid condition:

- Signal change from LOW to HIGH at the input of the supplementary signal for each valid muting object on a sensor pair AND
- Supplementary signal HIGH when the relevant muting signal changes from LOW to HIGH

If sequence monitoring is configured, the muting signal that is active first (A1 or B2) is used as the relevant signal. If no sequence monitoring is configured, the muting signal is considered relevant if both signals of a sensor pair are active at the same time and muting is triggered as a result.

As soon as an object is detected by the muting sensors of the first muting sensor pair without a valid condition of the supplementary signal for muting release, the switchover to muting is not triggered and partial muting remains active.

To ensure the detection of a valid switchover, the following minimum time must be observed between the LOW to HIGH signal change of the switchover supplementary signal and the LOW to HIGH signal change of the relevant muting sensor:

- Input for supplementary signal on receiver: 5 ms
- Input for supplementary signal on DMM4 extension module: 50 ms
- Input for supplementary signal via IO-Link: 0 ms

The valid condition for switching from partial muting to muting is required for each muting object. Muting must be deactivated to perform a switchover, otherwise muting is ended.

For the entry/exit monitoring muting variant, the switchover from partial muting to muting can also be configured for muting from one direction of the conveyor belt only.

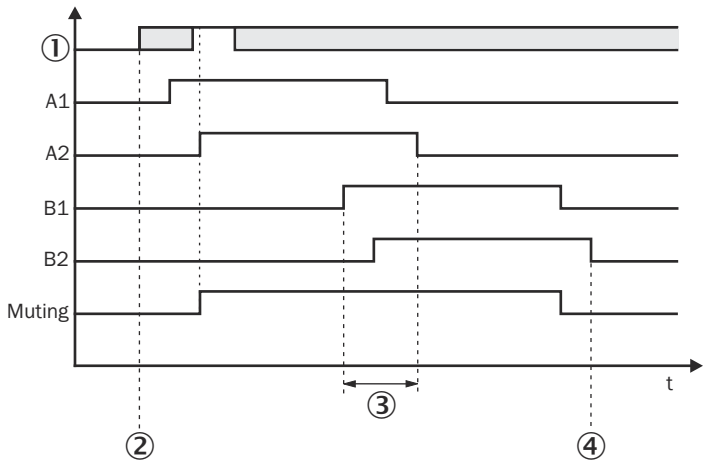

Figure 26: Signal sequence with configured supplementary signal during a muting cycle (example for entry/exit monitoring)

① Supplementary signal

② Start muting cycle

③ Acceptance

④ End muting cycle

4.3.6.10 Belt stop

Overview

The belt stop function pauses several muting-related time monitors when a conveyor belt stop is detected. This prevents a valid muting condition from being ended due to a timeout if the conveyor belt and therefore the muting object are at a standstill. The following time monitors are paused:

- Total muting time
- Concurrence monitoring
- Muting hold time

If a total muting time is configured, the maximum duration of muting or override is limited to 24 h in the event of a belt stop.

If concurrence monitoring is configured, the maximum duration of dissimilarly actuated muting signals for belt stop is limited to 24 hours.

The belt stop signal can be present at one of the following inputs:

- In3 or In4 on the M12, 8-pin system connection
- In17 at the M12, 8-pin system connection (only available when an extension module is connected)

The belt stop signal can only ever be present at exactly one of the possible inputs.

NOTE

If the belt stop signal is present at In17 of the extension module, the belt stop signal and the following signals must not be active at the same time:

- In3: Reset, override, muting release supplementary signal, and switchover from partial muting to muting
- In4: Muting signal 1, muting release supplementary signal, and switchover from partial muting to muting

A time delay of at least 50 ms between the activation of the signals must be ensured.

For a non-safety-related use of the belt stop function, this can also be controlled via IO-Link.

The belt stop function is available for the muting and override functions.

Prerequisites

- Software configuration

Functionality

When the conveyor belt is stopped, the signal at the belt stop input changes from HIGH to LOW. Active muting-related time monitors are paused until the conveyor belt starts up again and a signal change from LOW to HIGH occurs. This also applies to override and the associated time monitors.

Table 23: Input signals from bandstop

Belt stop input	State
HIGH	Conveyor belt running, muting-related time monitors active
LOW	Conveyor belt stationary: • The muting-related time monitors are stopped. **AND** • The last status of the active muting sensors and the ESPE is monitored.

When the conveyor belt is stopped, the following signals are monitored for changes:

- Muting signals A1 and A2 (only if muting signals are active)
- Muting signals B1 and B2 (only if entry/exit monitoring is configured and muting signals are active)
- Status of the protective field (taking into account reduced resolution)

If a change in the monitored signals is detected, muting is ended.

The monitoring of the signals starts a configurable time after the signal change from HIGH to LOW at the belt stop input.

If monitoring of the signals is active after the conveyor belt has stopped and a muting condition occurs at both sensors, muting is only activated when the conveyor belt starts up again and the muting conditions are still active.

Muting end during belt stop

If muting was ended due to an interruption of the protective field while the conveyor belt is stationary, the system can reactivate muting if the following conditions are met:

- While the system is in the "Reset required" status, a valid reset sequence is recognized.
- The protective field is clear.
- The muting conditions are met.
- The monitored muting signals are unchanged.

4.3.6.11 Combining muting with fixed blanking

Overview

You can combine muting with fixed blanking. This is necessary, for example, when a conveyor belt transports material. The conveyor belt is permanently blanked by the fixed blanking. Muting, on the other hand, bridges the beams of the protective field through which the material travels.

You can also combine partial muting with fixed blanking. This combination can be used, for example, to permanently monitor all beams below a conveyor belt.

Prerequisites

- Function package DMM4 or DCM4
- Blanked objects do not change their position. No position tolerance is configured.

Complementary information

Muting is reset in the event of a fixed blanking error. This also applies to all muting statuses and monitors. After troubleshooting, a new, complete muting cycle is required.

4.3.6.12 Operating modes for muting

Overview

You can use the Safety Designer configuration software to configure operating modes with muting.

To do this, create at least two standard operating modes and change the settings for each of the standard operating modes.

The following settings can be individually configured for each mode:

- Muting (activation/deactivation)
- Partial muting (activation/deactivation/different configuration)
- Muting release supplementary signal (activation/deactivation/direction for entry/exit monitoring)
- Supplementary signal for switching from partial muting to muting (activation/deactivation/direction for entry/exit monitoring)
- Belt stop (activation/deactivation/start of monitoring after belt stop)
- Muting end condition (different configuration)
- For entry/exit monitoring: direction detection (activation/deactivation/different configuration)
- For entry/exit monitoring: sequence monitoring (activation/deactivation/different configuration)
- Muting hold time (for exit monitoring; different configuration)
- Muting end delay (for Muting end by ESPE; activation/deactivation/different configuration)
- Total muting time (activation/deactivation/different configuration)
- Concurrence monitoring (activation/deactivation/different configuration)
- Sensor gap monitoring (different configuration)
- Override (maximum number of consecutive overrides)

The following muting settings are the same for each muting mode:

- Muting variant
- Override (up to the maximum number of consecutive overrides)

If you create more than one standard configuration, you can specify whether a global or individual configuration should be used for muting. This can be useful when combining several functions for operating modes.

Prerequisites

- Function package DMM4 or DCM4
- Software configuration

Conditions for changing a muting mode:

The following conditions must be met to switch to a muting mode:

- Muting and override are deactivated.
- All muting signals are deactivated.

The change to a muting mode is only carried out if the conditions for the change have been met. The conditions can therefore cause the switchover time to a muting mode to increase.

The mode is changed immediately in the following cases, regardless of the conditions:

- The OSSD OFF or alignment operating mode is switched to a muting operating mode.
- A standard operating mode in which muting is deactivated is switched to a muting operating mode.
- Monitoring of the maximum switchover time is configured and the maximum time has elapsed.
- After switching on, the system switches to a valid muting operating mode.
- If the laser alignment aid is switched on.
- Inputs for safety sensors (SDI) are configured and deactivated and the muting operating mode is switched.
- A global muting configuration is defined for the operating modes.
- If a fixed blanking error is active.

Muting is reset when a muting mode is changed. This also applies to all muting statuses and monitors. After the muting mode has been changed, a new, complete muting cycle is required.

Further topics

- "Operating modes", page 82
- "Calculating the times for an operating mode change", page 86
- "Response time", page 238

4.3.7 Smart Box Detection

Overview

Smart Box Detection enables human-material differentiation by conveying only geometrically uniform objects to or from a plant or machine.

The protective field always remains active, meaning interruption in the protective field above an object is reliably detected by the protective device and the dangerous machine state is stopped.

Smart Box Detection can only be configured on safety light curtains with a 14 mm resolution.

If devices with a protective field height of 1800 mm ... 2100 mm are used, Smart Box Detection cannot be configured with beam coding (Code1 or Code 2).

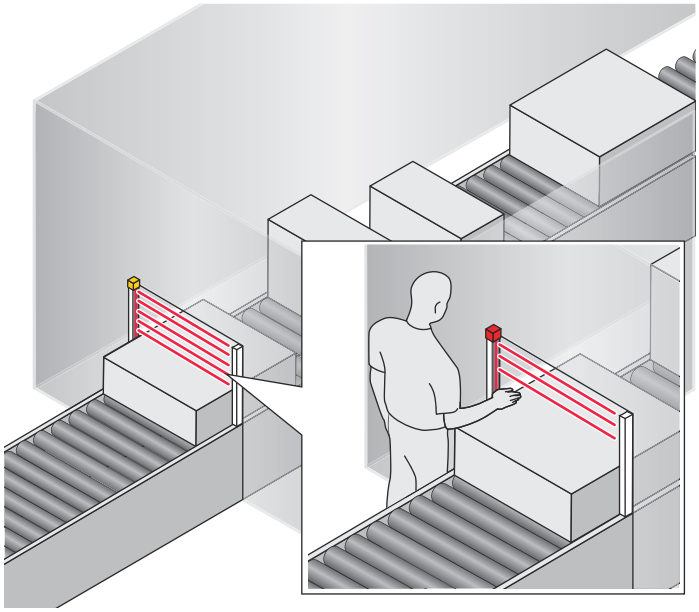

Figure 27: Smart Box Detection application example

Prerequisites

- Device with a resolution of 14 mm
- Function package SP2 or DCM4
- The objects cast a rectangular shadow without gaps (geometrically uniform objects) when passing through the protective field.
- The objects do not have a reflective surface.
- The objects must have a defined minimum height and minimum width and maintain a defined minimum distance from each other.
- The object velocity is 0.1 m/s ... 1 m/s.
- The safety light curtain is mounted perpendicular to the conveyor plane for optimum availability.
- The lower edge of the housing is flush with the transport level.

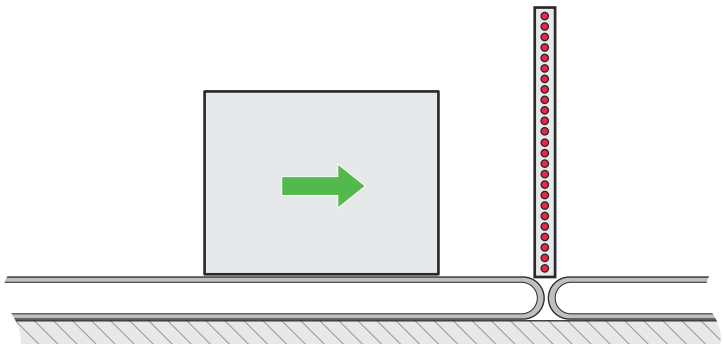

- The object blocks access to the hazardous area. Lateral interruption in the protective field is not possible.
- Smart Box Detection may only be used in applications where it is ruled out that people or body parts can be recognized as valid objects, e.g. due to their work clothes or due to deliberate manipulation of the protective device.
- Multiple sampling is set to 2 scans when Smart Box Detection is configured.
- When combined with a reduced resolution (Basic), the number of beams with reduced resolution must not exceed 2.

Functionality

The protective device detects objects that cast a rectangular shadow without gaps when passing through.

If, on the other hand, other objects, especially persons, enter the protective field, the protective device detects the deviation from a valid object. The dangerous machine state is stopped.

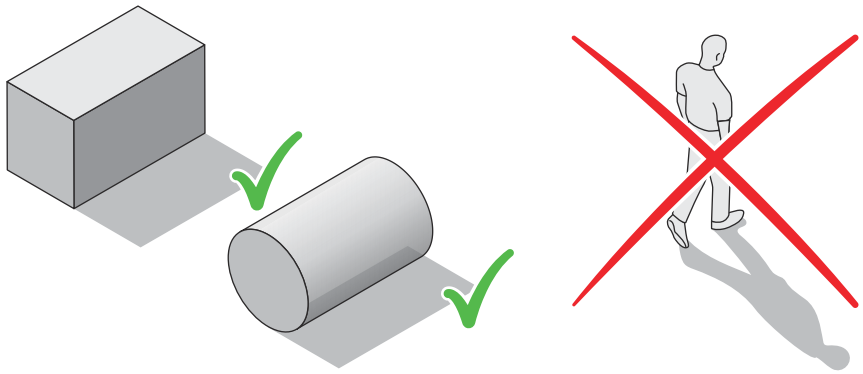

Figure 28: Left: Rectangular shadow without gaps. Right: Shadow with gaps.

If Smart Box Detection is configured, the protective field always remains active. Interruption in the protective field above a valid object is reliably detected by the protective device and the dangerous machine state is stopped.

4.3.7.1 Object properties

Overview

Smart Box Detection allows geometrically uniform objects to pass through the protective field that have a certain minimum size.

Real life objects often have non-straight edges or are damaged, e.g., the transport box is torn or dented. Smart Box Detection therefore also allows objects whose upper and lower and lateral object edges are within a certain tolerance zone (increased availability of the system).

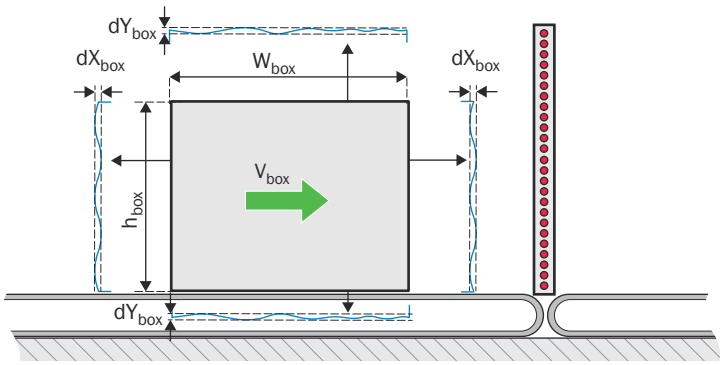

Figure 29: Smart Box Detection: Object properties

Permitted object properties

Table 24: Permitted object properties

Symbol	Name	Value
h_{box}	Object height	134 mm ... (number of beams - 4) * 10 mm, see "Object height", page 64
w_{box}	Object width	min. 10 mm ... 100 mm [1]
dY_{box}	Upper and lower object edge tolerance (object height)	At least 10 mm [2]
dX_{box}	Lateral object edge tolerance (object width) [3]	min. 6 mm ... 60 mm (uncoded system) min. 4 mm ... 40 mm (coded system)
v_{box}	Object speed	0.1 m/s ... 1 m/s
a_{box}	Object distance	min. 10 mm ... 100 mm[1]

1) The values depend on the object speed.

2) The values depend on the reduced resolution.

3) The values depend on the object speed and the set beam coding.

4.3.7.1.1 Object height

Overview

If Smart Box Detection is active, only objects with a permitted object height are allowed to pass through the protective field.

The minimum object height ensures that an interruption of the lower protective field, e.g., by a hand, is not recognized as a valid object. The minimum object height is therefore limited to ≥ 13 beams.

The maximum object height ensures that the topmost light beam remains clear so as not to interfere with the optical synchronization of the ESPE. The maximum object height is therefore limited to ≤ (number of beams – 5).

When configured via the SP2 system plug, the largest possible range is set for the object height (minimum object height = 13 beams, maximum object height = (number of beams – 5)).

When configured via Safety Designer, the restriction of the object height can be customized.

Calculation of the minimum and maximum object height

An object is reliably recognized as a valid object if it interrupts a certain number of configured light beams. The object can then pass through the protective field without the machine being switched off.

The following formulas can be used to calculate the minimum and maximum object height:

- Minimum object height: $h_{Box\_min} \geq (n * 10\ mm) + 4\ mm$
- Maximum object height: $h_{Box\_max} \leq (m + 1) * 10\ mm$

Where:

- n = Number of configured beams for the minimum object height
- m = Number of configured beams for the maximum object height

Calculation of the object height that safely leads to shutdown

An object is recognized as an invalid object if it interrupts too few beams or more than the permitted number of beams. The protective field is then considered interrupted and the machine is switched off.

The following formulas can be used to calculate reliable shutdown for objects that are too small or too large:

- Safe shutdown if objects are too small: Shutdown for objects ≤ n * 10 mm)
- Safe shutdown if objects are too large: Shutdown for objects ≥ m * 10 mm+ 14 mm

Where:

- n = Number of configured beams for the minimum object height
- m = Number of configured beams for the maximum object height

4.3.7.1.2 Object edge tolerance

Overview

Increased availability of the system is possible due to the object edge tolerance. Objects that have been damaged during transport, for example, can pass through the protective field despite odd object edges as long as the defined tolerance zones are not exceeded.

Lateral object edge tolerance

The lateral object edge tolerance is proportional to the object speed. The faster the object speed (v_{box}), the greater the lateral object edge tolerance, see figure 30, page 65 and see figure 31, page 66.

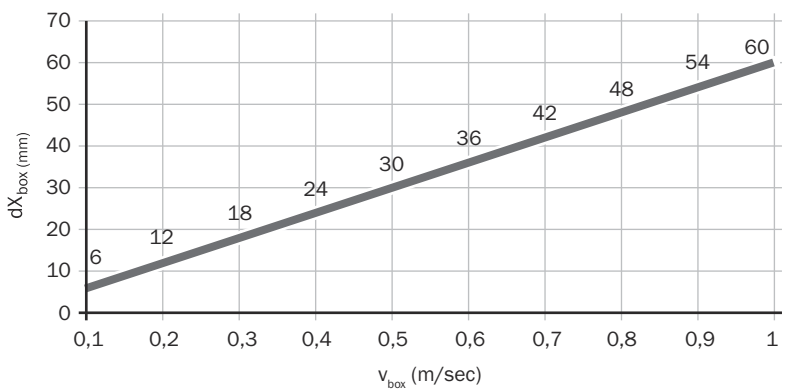

Figure 30: Lateral object edge tolerance for an uncoded system

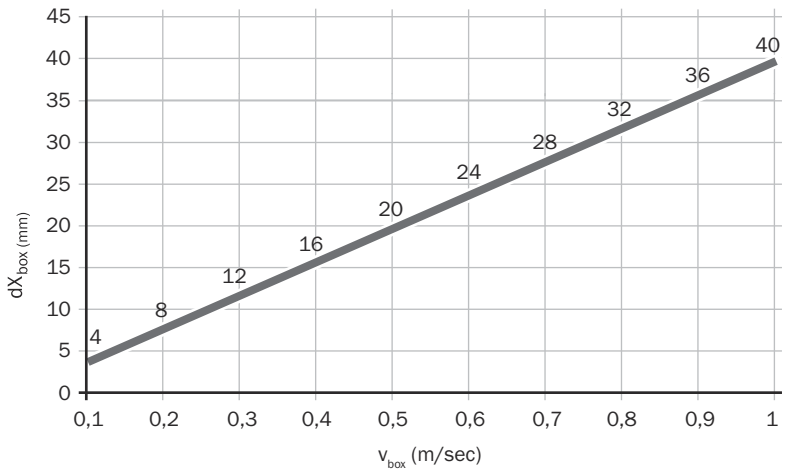

Figure 31: Lateral object edge tolerance for a coded system

Upper and lower object edge tolerance

The upper and lower object edge tolerance depends on the reduced resolution, see table 25, page 66.

Table 25: Upper and lower object edge tolerance depends on the reduced resolution

Reduced resolution	Upper object edge tolerance		Lower object edge tolerance
	Increasing object height of the passing object	Decreasing object height of the passing object	
Reduced resolution deactivated	At least 10 mm	At least 10 mm	At least 10 mm
1 beam	min. 20 mm	At least 10 mm	At least 10 mm
2 beams	min. 30 mm	At least 10 mm	At least 10 mm

4.3.7.1.3 Object speed

The object may move through the protective field at a speed of 0.1 m/s ... 1.0 m/s. At higher speeds, reliable human-material differentiation is not guaranteed.

4.3.7.1.4 Object distance and object width

The objects are reliably detected if a minimum distance of 10 mm ... 100 mm is maintained between 2 consecutive objects and the objects have a minimum width of 10 mm ... 100 mm. The values depend on the object speed.

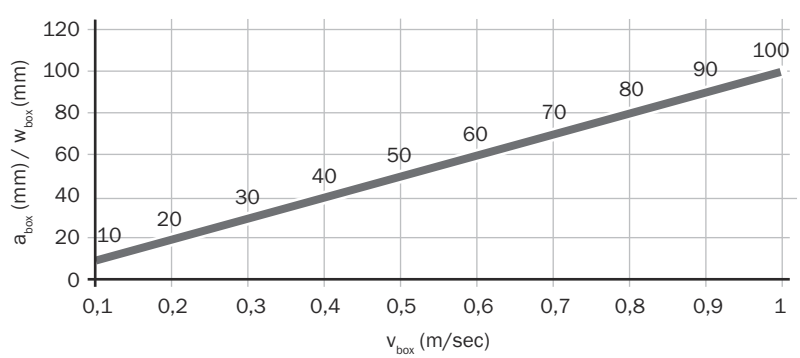

Figure 32: Object distance and object width dependent on object speed

4.3.7.2 Minimum distance to the hazardous point with Smart Box Detection

Overview

The minimum distance to the hazardous point when Smart Box Detection is configured must be calculated according to ISO 13855.

The parameters depend on the application type.

Application type 1:

- Object exit [3]: Regardless of whether the presence of people on the transport level can be ruled out.
- Object entry [4]: Presence of people at the transport level can be ruled out.

Application type 2:

- Object entry [5]: Presence of people at the transport level cannot be ruled out.

Special considerations when calculating the minimum distance to the hazardous point

Regardless of the application type, the following applies when calculating the minimum distance for reaching through the protective field:

- To calculate the minimum distance to the hazardous point for reaching through, the following formula must be used in deviation from ISO 13855.

When calculating the minimum distance for application type 2, the following also applies:

- For the approach speed K, the object speed must be taken into account in addition to the walking and/or gripping speed.

Calculation of the minimum distance to the hazardous point for reaching through the protective field in accordance with ISO 13855

The following formula is used to calculate the minimum distance:

- $S = (t_1 + t_2) * K + Z_{SBD}$

Where:

- S = Minimum distance in millimeters (mm)
- t_1 = Response time of the protective device in seconds (s)

  The response time is 0.08 s (independent of the protective field height and beam coding).
- t_2 = Machine stopping time in seconds (s)

  The machine stopping time is to be determined individually, e.g. 0.1 s
- K = Approach speed of a person or body part (mm/s) (see ISO 13855)
  - Application type 1: Approach speed = walking and/or gripping speed of a person or body part (e.g. 2000 mm/s)
  - Application type 2: Approach speed = v_{box} + walking and/or gripping speed of a person or body part (e.g. 2000 mm/s)

    v_{box} = object speed (mm/s), 100 mm/s ... 1,000 mm/s
- Z_{SBD} = Supplement for reliably distinguishing between a valid object and a person or body part in millimeters (mm), see table 26.

Supplement Z_{SBD}

Supplement Z_{SBD} indicates how far a person or body part can approach the hazardous area before the protective device is triggered.

3) Objects on the transport level move out of the hazardous area.
4) Objects on the transport level move into the hazardous area
5) Objects on the transport level move into the hazardous area.

The value depends on the application type and the reduced resolution (Basic).

Table 26: Supplement Z_{SBD}

Application type	Reduced resolution (Basic)	Z_{SBD}
1	Deactivated	128 mm
1	1 beam	208 mm
1	2 beams	328 mm [1]
2	Combination is not allowed	236 mm

[1] The Z_{SBD} supplement has been reduced from 850 mm to 328 mm compared to previous versions of this document due to ISO 13855:2024-11.

Calculation example: Application type 1

The example shows the calculation of the minimum distance for application type 1 (e.g. object entry, people are ruled out on the transport level) when the reduced resolution is deactivated.

- Response time: 0.08 s
- Machine stopping time: 0,1 s
- Approach speed: 2,000 mm/s
- Reduced resolution deactivated

$S = (t_1 + t_2) * K + Z_{SBD}$

$S = (0.08\ s + 0.1\ s) * 2{,}000\ mm/s + 128\ mm$

$S = 488\ mm$

4.3.7.3 Effective resolution with Smart Box Detection

If Smart Box Detection is configured on a single system and the protective field is clear of objects, the protective device has an effective resolution of 14 mm (reduced resolution deactivated).

As soon as the protective device detects a valid object, the detection capability of the free protective field area changes. The detection capability of the protective field area not covered by an object depends on the configured reduced resolution.

NOTE
Configuration of reduced resolution (Basic) is only permitted in the framework of application type 1 [6].

Table 27: Effective resolution with Smart Box Detection in combination with reduced resolution

Reduced resolution	Effective resolution with free protective field	Effective resolution above a valid object
Reduced resolution (Basic) deactivated	14 mm	30 mm
1 beam	24 mm	40 mm
2 beams	34 mm	50 mm

[6] Object exit (regardless of whether people can be ruled out on the transport level) or object entry (people can be ruled out on the transport level)

4.3.7.4 Smart Box Detection Override

Overview

Smart Box Detection Override enables manual bypassing of the protective device after an invalid object has been detected by the protective device. The system can be released or an error-free state can be achieved.

When configuring via the SP2 system plug, Smart Box Detection Override is always active if Smart Box Detection has been configured. The Smart Box Detection signal is then present at the In3 connection.

When configuring via Safety Designer, the Smart Box Detection Override signal can be present at one of the following inputs:

- In2 at the extension connection of the receiver
- In3 at the M12, 8-pin system connection

The Smart Box Detection Override signal can only ever be present at exactly one of the possible connections.

In addition, the reset signal can be configured on the In2 or In3 inputs in order to use the combined reset and Smart Box Detection Override function.

Important information

DANGER
During Smart Box Detection Override, the protective field is not monitored.

Persons or body parts to be protected may not be detected.

→ Prevent access to the hazardous area during execution of Smart Box Detection Override.

Prerequisites

- The Smart Box Detection Override control switch is mounted outside of the hazardous area so that it cannot be actuated by a person that is inside the hazardous area.
- The operator can oversee the entire hazardous area when actuating the control switch.

Performing Smart Box Detection Override

When a Smart Box Detection condition is violated, the OSSDs switch to the OFF state.

The "Smart Box Detection Override required" status is triggered by the system only when the following conditions apply:

- The protective field is interrupted and the beam status of the protective field remains the same for the time until "Smart Box Detection Override required" is released.
- The top light beam is not interrupted.
- The integrated laser alignment aid of the sender is switched off.

When configured via the SP2 system plug, the time until the release of "Smart Box Detection Override required" is set to 5 seconds.

When configured via Safety Designer, the time until the release of "Smart Box Detection Override required" can be customized.

If the conditions apply, the system changes to the "Smart Box Detection Override required" status. The cause of the error is indicated by the LEDs on the receiver. If an optional signal lamp is connected, this signal lamp also flashes.

To remove an object from the protective field, you can trigger the integrated Smart Box Detection Override function via the control switch. This causes the output signal switching devices (OSSDs) to switch to the ON state. Alternatively, you can eliminate the cause in another way, e.g., by clearing the belt.

As soon as the protective field is clear, Smart Box Detection Override is ended.

DANGER

Smart Box Detection Override delayed or ineffective

If automatic calibration of the protective field width is configured and the protective field is interrupted when the ESPE is switched on for the first time, the termination of Smart Box Detection Override may be delayed or ineffective due to the detection of a clear protective field.

→ Set the protective field width manually.

The maximum duration for Smart Box Detection Override is limited by the total time for Smart Box Detection.

Monitoring override statuses

For safety reasons, the number of consecutive Smart Box Detection Override statuses is limited. The system resets the counter in the following cases:

- After an error-free cycle without override
- Each time the system is started
- When resetting Smart Box Detection (change of Smart Box Detection operating mode, change to OSSD OFF mode, laser alignment aid switched on)

When configured via the SP2 system plug, the number of consecutive Smart Box Detection Override statuses is limited to 5. When configured via Safety Designer, the number can be customized.

If the permitted number of Smart Box Detection Override statuses has been exceeded, the system then switches to the locking status and displays an error message.

Complementary information

If reset and Smart Box Detection Override are configured on the same input, both functions are started using a common control switch.

If the override status is exited and reset is configured, no additional reset is required provided the OSSDs are allowed to remain active.

4.3.7.5 Total time for Smart Box Detection

The total time limits the maximum duration for Smart Box Detection or Smart Box Detection Override, i.e., Smart Box Detection or Smart Box Detection Override are ended at the latest when the total time has expired.

When configured via the SP2 system plug, the total time for Smart Box Detection is limited to 24 h. When configured via Safety Designer, the total time can be customized.

4.3.7.6 Exit delay after object entry

Overview

The exit delay after object entry enables the monitoring of a delayed object exit, i.e., an object must be detected in the protective field at a constant height within the object edge tolerance for at least the configured time after object entry. Otherwise, the detection of a valid object is ended and the OSSDs are deactivated.

The exit delay after object entry may increase the required minimum object width.

When configured via the SP2 system plug, the exit delay after object entry is set to 0 scans (no delay).

When configured via Safety Designer, the exit delay after object entry can be customized.

Further topics

- "Object distance and object width", page 66

4.3.7.7 Operating modes for Smart Box Detection

Overview

You can use the Safety Designer configuration software to configure operating modes with Smart Box Detection.

To do this, create at least two standard operating modes and change the settings for each of the standard operating modes.

The following settings can be individually configured for each mode:

- Smart Box Detection (activation/deactivation)
- Minimum object height
- Maximum object height
- Exit delay after object entry
- Monitoring of the total time
- Time until release of "Smart Box Detection Override required"
- Number of override cycles

The following setting is the same for every Smart Box Detection operating mode:

- Override (except for the number of override cycles and the time until the release of "Smart Box Detection Override required")

Prerequisites

- Function package DCM4
- Software configuration

Conditions for switching a Smart Box Detection operating mode

The following condition must be met to switch to a Smart Box Detection operating mode:

- The protective field is clear, i.e., there is no unexpected interruption.

The switch to a Smart Box Detection operating mode is only carried out if the condition for the switch is met. The condition can therefore cause the switchover time to a Smart Box Detection operating mode to increase.

The operating mode is switched immediately in the following cases, regardless of the condition:

- The OSSD OFF mode or alignment operating mode is switched to a Smart Box Detection operating mode.
- A standard operating mode in which Smart Box Detection is configured as deactivated is switched to a Smart Box Detection operating mode.
- Monitoring of the maximum switchover time is configured and the maximum time has elapsed.
- After switching on, the system switches to a Smart Box Detection operating mode.
- If the laser alignment aid is switched on.

Smart Box Detection is reset when a Smart Box Detection operating mode is switched. This also applies to all internal statuses, operating data and monitors. After the Smart Box Detection operating mode has been switched, a new, complete Smart Box Detection cycle is required.

Further topics

- "Operating modes", page 82

4.3.8 Blanking

Overview

The blanking function is used when objects are permanently in the protective field. Up to 4 objects per device can be blanked in the protective field. A blanked area is not part of the protective field. Blanked objects must therefore be permanently in the protective field and access to the hazardous area must be prevented.

The function is configurable in 2 variants:

- Fixed blanking
- Floating blanking

You can combine fixed and floating blanking.

If more than one area is configured with fixed or floating blanking, the order of the blanked objects in the protective field must not change.

You can also configure the teach-in function for fixed blanking.

Fixed and floating blanking is individually configurable for all devices in a cascade.

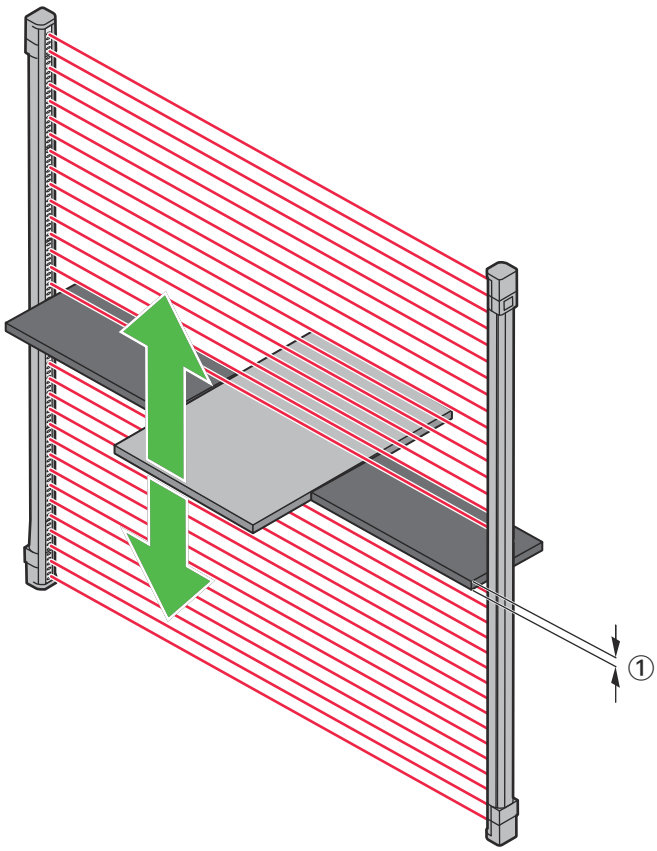

Figure 33: Blanking

① Blanked area, laterally protected by mechanical locks

Important information

DANGER

Danger due to unprotected means of access to the hazardous area

Blanked areas in the protective field represent potential safety gaps. They must be subjected to a separate risk analysis.

If object gaps are configured, these must be taken into account in the risk analysis.

→ Carefully check whether and where blanking is necessary in the protective field.
→ Take suitable protection measures, e.g., mechanically in the entire area between the sender and receiver, so that access to the hazardous area is completely prevented. Otherwise, take the blanked area into account when calculating the minimum distance.
→ After every change to the configuration, check the protective field using a test rod check.

Prerequisites

- Software configuration
- Multiple sampling is set to 2 scans when blanking is configured.
- Manual setting of the protective field width is configured.
- The objects do not have a reflective surface.

Functionality

The safeguard monitors the blanked areas. The blanked objects must therefore be permanently detected in the configured area. If the blanked objects are not detected as expected within the configured tolerances in the area, the OSSDs switch to the OFF state.

4.3.8.1 Fixed blanking

Overview

You can use fixed blanking to blank certain areas of the protective field, e.g., to permanently place a table in the protective field.

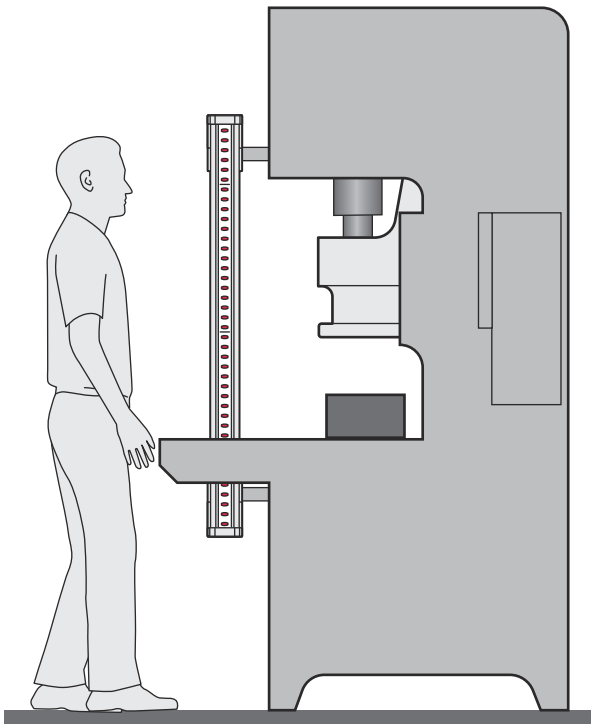

Figure 34: Fixed blanking: Machine table permanently in the protective field

Prerequisites

- Function package DMM4 or DCM4
- The first or last beam must be clear for synchronization between sender and receiver.

Functionality

The safeguard detects a blanked object at a fixed position in the protective field. The OSSDs remain in the ON state as long as the object is in the defined position.

If the object is not in the defined position as expected, the OSSDs switch to the OFF state.

Characteristics of fixed blanking

- Up to 4 objects of configurable sizes can be configured within a protective field.
- A size tolerance can be set for each object. A blanked object can be smaller than the configured size up to the configured size tolerance, either on one side or the other.
- A position tolerance is configurable for each object. An object is allowed to move within the configured position tolerance.
- Object gaps up to a certain size can be permitted for each object.

4.3.8.1.1 Object sizes and position tolerance for fixed blanking

Overview

The following object sizes and position tolerances can be configured for fixed blanking.

Table 28: Object sizes and position tolerance

Object size	Size tolerance [1]	Position tolerance [2]
1	0	0, 1, 2

Object size	Size tolerance [1]	Position tolerance [2]
≥ 2	0, 1	0, 1, 2

[1] The size tolerance means that the object is allowed to be smaller than the set object size by the specified number of beams.

[2] The position tolerance means that the object is allowed to deviate from the set position by the specified number of beams in both directions.

If an object is configured with a size tolerance > 0 and a position tolerance > 0 and the object is detected at the outer edge of the position tolerance, the object size must not deviate from the configured size. The size tolerance is not taken into consideration in this case.

If the object is not recognized as expected, the OSSDs switch to the OFF state.

4.3.8.1.2 Object gaps for fixed blanking

Overview

You can configure for a fixed blanking that one or more object gaps are permitted.

The first and last beam of an object must not have a gap. You can also configure a size tolerance if necessary.

Table 29: Object gaps for fixed blanking

Physical resolution	Maximum size of an object gap depending on the configuration	
	Object gap = 1 beam	Object gap = 2 beams
14 mm	6 mm	16 mm
30 mm	20 mm	Not allowed

4.3.8.1.3 Fixed blanking with increased size tolerance

Overview

If you require an increased size tolerance on one or both sides of a fixed blanked object, you can combine fixed blanking with reduced resolution (Advanced).

This may be necessary if other objects have to be moved through the protective field directly adjacent to a blanked object, e.g., during material transportation via a blanked conveyor belt or a machine table.

To do so, configure an area for reduced resolution (Advanced) directly adjacent to a fixed blanked object without position tolerance in Safety Designer. The object size for the reduced resolution (Advanced) must be equal to the area size. This allows additional objects in the area of the reduced resolution (Advanced) to interrupt beams without the OSSDs switching to the OFF state.

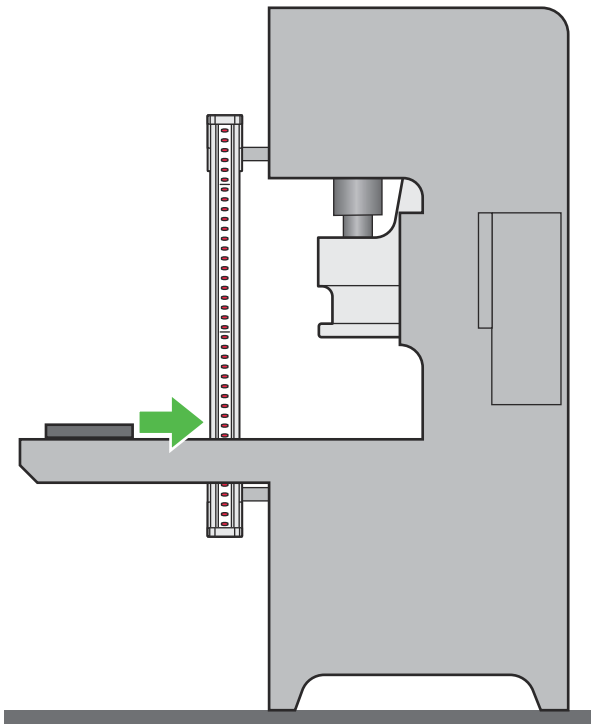

Figure 35: Fixed blanking with increased size tolerance: machine table permanently in the protective field, material transportation via the machine table

4.3.8.1.4 Teach-in

Overview

The teach-in function allows you to change the size, number and position of fixed blanked objects in a protective field.

To do so, place objects of a suitable size at the desired position in the protective field. The teach-in process is then triggered by an external signal, e.g., when a tool is changed. You do not need any configuration software for this.

In the Safety Designer configuration software, you define the size tolerance, position tolerance and allowed object gaps in advance. This configuration is valid for all taught-in objects. Teach-in can be configured individually for each device in a cascade.

The teach-in signal can be present at one of the following inputs:

- In1 at the extension connection of the receiver
- In3 at the M12, 8-pin system connection

The teach-in signal can only ever be present at exactly one of the possible inputs.

Teach-in may only be performed in areas or operating modes that are suitable for the respective application.

If objects of an unsuitable size or in an unsuitable position are taught-in, this can reduce the availability of the system. You should therefore ensure that only authorized persons have access to the control switch.

Prerequisites

- Function package DCM4
- Manipulation-protected control switch, e.g. key-operated pushbutton

Functionality

If a valid signal for teach-in has been detected through the actuation and release of the control switch, the teach-in process can be performed.

The following prerequisites must be met:

- Teach-in is configured. The function is activated in the currently selected operating mode.
- A valid standard operating mode is selected. The OSSD OFF mode operating mode or the alignment mode is not permitted.
- No change to the operating mode is pending. The operating mode must not be switched during the teach-in process.

If one of these conditions is not met, the teach-in is not performed.

The objects must have the following characteristics so that they can be taught-in:

- Depending on the physical resolution of the ESPE, the object is at least 14 mm or 30 mm in size. If reduced resolution is configured, the object must be larger than the determined effective resolution for the reduced resolution. Smaller objects may not be taught-in and may lead to a switch-off. If necessary, you can remedy a shutdown by slightly moving or realigning the object.
- The object has no gaps.
- The first or last beam must be clear for synchronization between sender and receiver.
- When teaching-in an object with a configured position tolerance, the object must be positioned so that its distance from the edge of the ESPE is at least equal to the configured position tolerance.
- The maximum number of objects allowed in the protective field must not be exceeded.
- For configured object gaps: The object is not smaller than the minimum object size.
  - Object gap = 1 beam: minimum object size = 3 beams
  - Object gap = 2 beams: minimum object size = 4 beams
- For configured size tolerance: The object is not smaller than the minimum object size of 2 beams.

The OSSDs are in the OFF state during teach-in.

Once the teach-in process has been successfully completed, the system is automatically started with the new configuration. The taught-in configuration is permanently stored in the configuration memory. If no restart interlock is configured, the OSSDs switch to the ON state.

NOTE
Check the need for a restart interlock.

If an error is detected during teach-in, e.g., because the maximum number of objects has been exceeded, the teach-in process is aborted. The configuration remains unchanged. The teach-in process can be performed again or the system can be restarted with the existing configuration.

Fixed blanking can also be activated or deactivated directly via the teach-in process. An additional signal is not required.

Activate or deactivate fixed blanking:

- If the teach-in process is started and there is no object present in the protective field, blanking is deactivated.
- If the teach-in process is started and one or more objects are present in the protective field, blanking is activated.

Observe test concept and test rod check

After each teach-in process, the protective field must be checked with a test rod:

- Check the effectiveness of the entire safeguard.
- Check whether the safety light curtain behaves as expected when you insert blanked objects into the protective field, remove them again or operate the system without the objects.
- If necessary, recalculate the minimum distance to the hazardous point and ensure that this is maintained during mounting.

4.3.8.2 Floating blanking

Overview

With floating blanking, objects within a blanked area can move during operation. You can configure floating blanking, e.g., to lay a cable through the protective field or if there is a moving machine part in the protective field.

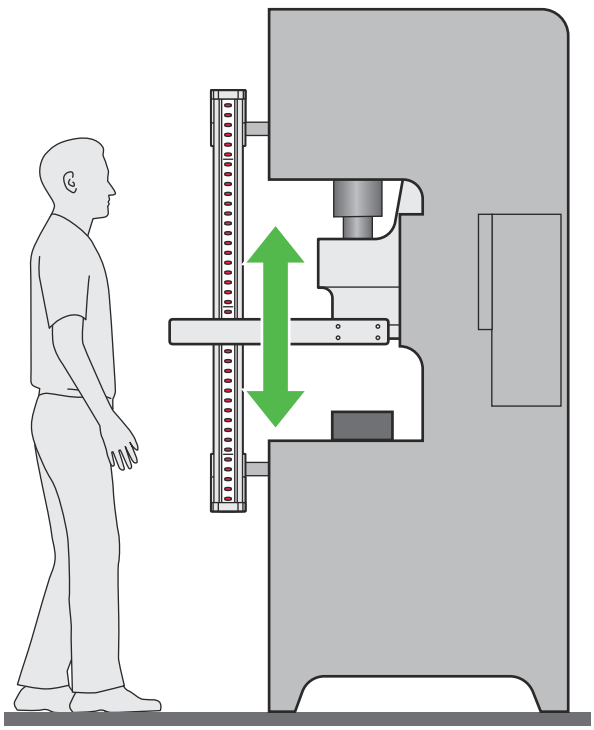

Figure 36: Floating blanking: moving machine part in the protective field

Prerequisites

- Function package DCM4

Functionality

The safeguard detects a blanked object in a defined area in the protective field. The OSSDs remain in the ON state as long as the object moves within the defined area.

If the object is not in the defined area as expected, the OSSDs switch to the OFF state.

Characteristics of floating blanking

- Up to 4 objects of configurable sizes can be configured within a protective field.
- An associated movement area can be set for each object. The object may move within this area in the protective field.
- A size tolerance can be set for each object. A blanked object can be smaller than the configured size up to the configured size tolerance.

4.3.8.2.1 Object size tolerance

Overview

The following object size tolerances can be configured for floating blanking.

Table 30: Object size tolerance

Object size	Size tolerance [1]
2	1
≥ 3	1, 2

[1] The size tolerance means that the object is allowed to be smaller than the set object size by the specified number of beams.

4.3.8.2.2 Object size

Overview

The size of a moving object must be within the minimum and maximum object size in order to always be validly detected within the tolerances when moving through the protective field.

Table 31: Minimum and maximum object size for floating blanking

Physical resolution	Minimum object size	Maximum object size
14 mm	(n-m-1) * 10 mm + 14 mm	n * 10 mm
30 mm	(n-m-1) * 25 mm + 30 mm	n * 25 mm

n = object size in beams. At least 2 beams are required for floating blanking.

m = size tolerance. At least 1 beam for floating blanking.

4.3.8.3 Distance between 2 blanked objects

Overview

The distance between 2 blanked objects must always correspond to at least one beam.

With fixed blanking, this distance also applies taking into account all configured tolerances.

Combination of fixed and floating blanking

If fixed blanking with a configured size or position tolerance and floating blanking are combined, the distance between the two blanked objects can also be formed by a tolerance beam of the fixed area. The moving object must not, however, interrupt this beam.

A floating blanking area may be directly adjacent to a fixed blanking area, but they must not overlap. Floating blanking areas may overlap.

4.3.8.4 Combining blanking and reduced resolution

Overview

You can combine fixed and floating blanking with a reduced resolution. The reduced resolution then only applies to beams in the protective field that are not interrupted by a blanked object.

The distance between a blanked object and an ignored object at reduced resolution must generally correspond to at least one beam.

If one of the following conditions applies, an ignored object can also be directly adjacent to a fixed blanked object at reduced resolution:

- Fixed blanking with position tolerance = 0 is configured.
- Fixed blanking with position tolerance > 0 is configured. The blanked object is at the outer limit of the position tolerance.

The reduced resolution is not applied to beams that belong to the position tolerance of a fixed blanked object. If such a beam is interrupted, the OSSDs switch to the OFF state.

4.3.8.5 Effective resolution for blanking

Overview

The effective resolution of the system changes when blanking is configured, when a size tolerance for the objects is defined.

If you only configure fixed blanking without size tolerance, the effective resolution remains unchanged.

Important information

NOTE
If the safety light curtain is configured with blanking, then the minimum distance must be calculated according to the effective resolution, for example as described in the current version of ISO 13855.

If a size tolerance is configured for blanking, the effective resolution may be reduced at the edges of the blanked objects and may vary depending on the operating mode. The lowest effective resolution must therefore always be taken into account when calculating the minimum distance to the hazardous point.

Effective resolution for blanking with size tolerance and without reduced resolution

The following information on the effective resolution when blanking is configured applies if one of the following conditions is true:

- A movable object is configured.

  OR
- A fixed blanked object with size tolerance = 1 is configured. No reduced resolution is configured.

  OR
- A fixed blanked object with size tolerance = 1 is configured in combination with reduced resolution (Advanced). The area with reduced resolution and the blanked object are not directly adjacent to each other and do not overlap.

Table 32: Effective resolution for blanking with size tolerance without reduced resolution

Physical resolution	Effective resolution for blanking
14 mm	n * 10 mm + 14 mm
30 mm	n * 25 mm + 30 mm

n = Number of beams for the size tolerance.

Effective resolution for blanking with size tolerance and reduced resolution

If a fixed blanked object with size tolerance = 1 is configured in combination with a directly adjacent or overlapping area with reduced resolution, the following specification for the effective resolution is valid:

Table 33: Effective resolution for fixed blanking with size tolerance and reduced resolution

Physical resolution	Effective resolution for fixed blanking with size tolerance = 1 and reduced resolution	Maximum size of an ignored object at a reduced resolution
14 mm	(m + 1) * 10 mm + 14 mm	m * 10 mm
30 mm	(m + 1) * 25 mm + 30 mm	m * 25 mm

m = Number of beams for the reduced resolution.

The specified effective resolution is not valid between 2 fixed blanked objects with size tolerance = 1 if the following conditions apply:

- An ignored object at a reduced resolution can be directly adjacent to both blanked objects.

  AND
- The distance between the two blanked objects corresponds to the number of beams configured for reduced resolution.

4.3.8.6 Operating modes for fixed and floating blanking

Overview

You can use the Safety Designer configuration software to configure operating modes with fixed or floating blanking.

To do this, create at least two standard operating modes and change the settings for each of the standard operating modes.

The following settings can be individually configured for each mode:

- Fixed blanking (activation/deactivation)
- Floating blanking (activation/deactivation)
- Individual configuration of blanked objects incl. the associated parameters
- General and device-specific activation or deactivation of teach-in for fixed blanking
- Configuration of the standard parameters for teach-in for fixed blanking

If you create more than one standard configuration, you can specify whether a global or individual configuration should be used for the fixed or floating blanking. This can be useful when combining several functions for operating modes.

Prerequisites

- Function package DMM4 or DCM4
- Software configuration

Conditions for switching to an operating mode with blanking

The following condition must be met to switch to an operating mode with blanking:

- Teach-in for fixed blanking is deactivated.

The switch to an operating mode with blanking is only carried out if the condition for the switch is met. The switching time to an operating mode with blanking may therefore increase.

Further topics

- "Operating modes", page 82

4.3.9 Multiple sampling

Overview

The multiple sampling specifies how often an object must be detected before the protective device responds with a protective field interruption.

By using multiple sampling, you reduce the probability that any wood chips, insects or welding sparks, for example, located briefly in the protective field will cause the machine to switch off. This increases the availability of the machine.

Prerequisites

- Function package DMM4 or DCM4
- Software configuration

Functionality

You can define up to 4 scans for multiple sampling. Multiple sampling with 2 scans is set as standard.

If an object interrupts the protective field and the configured number of scans is exceeded, the OSSDs switch to the OFF state.

4.3.10 Operating modes

Overview

You can switch between different operating modes of the ESPE during operation. To do so, you can define up to 5 operating modes in the configuration software that you can switch between during operation.

If operating modes are to be used, at least two operating modes must always be configured. At least one of the operating modes must be a standard operating mode (configurable). A maximum of 4 standard operating modes (configurable) can be used.

The following inputs on the extension module are available for safety-related use of the operating modes:

- The DMM4 provides 3 inputs for connecting a signal for operating modes, so up to 3 operating modes can be defined.
- The DCM4 provides 4 inputs for connecting a signal for operating modes, so up to 5 operating modes can be defined.

For non-safety-oriented use of the operating modes, you can also control the desired operating mode via IO-Link. When controlling operating modes via IO-Link, you can define up to 5 operating modes.

For safety-related use of the operating modes, check the effects of the planned operating modes. Depending on the requirements of relevant standards, it may be necessary to use a key switch to select the operating modes.

It is possible to change an operating mode while the OSSDs are in the ON state. Check whether it is necessary to switch off the dangerous state during a change of operating mode for your application. If this is necessary, switching off and, if necessary, resetting must be implemented by means of a higher-level controller.

When configuring more than one operating mode, check the effectiveness of the safeguard for each operating mode combination.

WARNING

Risk of ineffectiveness of the safeguard

If the extension module (DMM4 or DCM4) or the operating mode selector switch are mounted outside the control cabinet or the sender is connected to the DCM4 extension module via a T-splitter with the operating mode selector switch, you must protect the corresponding connecting cables from short-circuits and cross-circuits, e.g., by laying them in suitable cable ducts.

Prerequisites

- Function package DMM4 or DCM4
- Software configuration

Connection

You can use the following connections to control the change between operating modes:

- Connection X3 on the DMM4 extension module (control via the safety inputs)
- Connection for the sender or operating modes on the DCM4 extension module
- IO-Link connection on the ESPE (control via IO-Link)

Control via the safety inputs and control via IO-Link cannot be combined.

As soon as the X3 connection on the DMM4 is used to control an operating mode, all three inputs on the connection for operating modes are blocked. Even if you only use two operating modes, you cannot use the third input for other functions.

Input signals for operating modes

Table 34: Valid combinations of input signals at the X3 connection on the DMM4 (safety inputs)

In13	In14	In15	Operating mode
1	0	0	1
0	1	0	2
0	0	1	3

Table 35: Valid combinations of input signals at the connection for the sender or operating modes on the DCM4 (safety inputs)

In13	In14	In15	In16	Operating mode
1	0	0	0	1
0	1	0	0	2
0	0	1	0	3
0	0	0	1	4
1	1	1	1	5

When using IO-Link, the operating mode is transmitted via IO-Link.

Overview of the possible operating modes

You can select the following operating modes:

- Standard operating mode (configurable)
- Alignment mode (predefined)
- OSSD OFF mode (predefined)

You can configure the following functions differently for each standard operating mode:

- Fixed blanking incl. teach-in
- Floating blanking
- Reduced resolution (Advanced)
- Muting

- Object pattern recognition
- Smart Box Detection

Functionality

One operating mode for each input used is configured using Safety Designer. The input signals are permanently monitored.

Tolerance time

- A tolerance time is configured for each signal change used when evaluating the input signals.
- After an input signal change, a change of operating mode is only started after this tolerance time has elapsed.
- The system changes to the locking status if an invalid status is detected after the tolerance time has elapsed.

Functionality and conditions for changing operating mode:

- There may be additional function-specific conditions for switching to standard operating modes that perform a specific function (e.g., muting). The operating mode change is only completed if these conditions are met. If more than one function is configured with individual configurations for standard operating modes, the change to a standard operating mode is only completed when all the conditions of the functions have been met.
- The response time of the protective device remains unchanged during a change of operating mode.
- During a change of operating mode, all input signals continue to be monitored and, in the event of further signal changes, the systems waits for the tolerance time.
  - If the previous operating mode change has not yet been completed after the tolerance time has elapsed, a new operating mode change is not started.
  - If the input signals for the operating mode change do not correspond to the current operating mode after the previous operating mode change has been completed, the corresponding operating mode change is started. Intermediate changes are not taken into account.

Monitoring the maximum switchover time

- You can configure a maximum time for the operating mode change. The maximum time must be greater than the tolerance time.
- The maximum time is monitored each time the operating mode is changed. If the change to the new operating mode has not been completed after the maximum time has elapsed, the OSSDs switch to the OFF state.
- The operating mode change is carried out immediately after the maximum time has elapsed and regardless of the function-specific conditions. The teach-in for fixed blanking is an exception. This process is not interrupted and is completed before the operating mode change. The OSSD is already in the OFF state during teach-in.

  Once the changeover is complete, the OSSDs can switch back to the ON state depending on the other conditions.

Functionality when switching on

- After switching on the system, first switch to a standard operating mode (with configuration). Only then is it possible to switch to alignment mode or OSSD OFF mode.
- The OSSDs remain in the OFF state until the first operating mode change has been completed.
- Monitoring of the input signals for valid combinations is only carried out after switching on the system if at least one input signal is active.

Complementary information

Additional information on the operating modes of the individual functions and possible function-specific conditions for changing the operating mode can be found in the description of the functions and in the Configuration section.

Further topics

- "Test rod check", page 125

4.3.10.1 Operating mode: OSSD OFF mode

Overview

You can assign an operating mode to the OSSD OFF mode. If you select this operating mode during operation, the OSSDs switch to the OFF state. The OSSDs remain in the OFF state as long as the OSSD OFF mode is active.

The following functions are deactivated in OSSD OFF mode:

- Muting is deactivated. The muting signals are not evaluated.
- Object pattern recognition is deactivated.
- Smart Box Detection is deactivated.

Muting

When an operating mode is changed to OSSD OFF mode, muting is reset. This also applies to all muting statuses and monitors. After switching to another operating mode, a new, complete muting cycle is required.

Smart Box Detection

Smart Box Detection is reset when an operating mode is changed to OSSD OFF mode. This also applies to all Smart Box Detection statuses and monitors. After switching to another operating mode, a new, complete Smart Box Detection cycle is required.

Object pattern recognition

When an operating mode is changed to OSSD OFF mode, object pattern recognition is reset. This also applies to all statues and object pattern recognition monitors. After switching to another operating mode, a new, complete object pattern recognition cycle is required.

4.3.10.2 Operating mode: Alignment mode

Overview

You can assign the laser alignment aid to an operating mode. If you select alignment mode during operation, the integrated laser alignment aid on the sender is activated.

The integrated laser alignment aid on the sender is deactivated when the alignment mode is deactivated.

Prerequisites

- The sender and receiver are connected to each other.

Further topics

- "Laser alignment aid", page 116

4.3.10.3 Calculating the times for an operating mode change

Overview

You can calculate the maximum total time required for an operating mode change. This total time only applies, however, if the operating mode change can be carried out immediately.

The following circumstances prevent the operating mode change from being carried out immediately and therefore increase the overall time:

- A previous operating mode change has not yet been completed.
- The function-specific conditions for the operating mode change (e.g. muting and override are deactivated) are not yet met.

The maximum switchover time for the operating mode change can be monitored and limited if necessary.

Depending on the application, it must be determined whether the switchover time for the operating mode change must be added to the response time.

Formula

Total time = $t_{OPM\_Tol} + t_{OPM\_Proc} + t_{OPM\_Cas\_Add} + t_{OPM\_Feat\_Add}$

The total time for an operating mode change is based on the following values:

- Tolerance time (configurable): t_{OPM_Tol}
- Switchover time: t_{OPM_Proc}
  - Control via safety inputs: maximum 60 ms
  - Control via IO-Link: maximum 35 ms
- Additional time for cascade: $t_{OPM\_Cas\_Add}$
  - Control via safety inputs: maximum 110 ms
  - Control via IO-Link: maximum 156 ms
  - Single system: 0 ms
- Additional time for functions: $t_{OPM\_Feat\_Add}$
  - The additional time for functions must be taken into account when switching between standard operating modes (configurable). The additional time for all functions is $t_{OPM\_Feat\_Add}$ = response time of the safety light curtain / configured multiple sampling.
  - If you switch from or to OSSD OFF mode, the additional time is 0 ms.
  - If you switch from or to alignment mode, the additional time is 0 ms.

Examples

- Switch from OSSD OFF mode to alignment mode
- Control via IO-Link
- Cascade
- Tolerance time: 0 ms

Total time: 0 ms + 35 ms + 156 ms + 0 ms = 191 ms

- Switch between two operating modes with different muting settings
- Control via safety inputs
- Single system
- Tolerance time: 1,000 ms
- Response time: 10 ms (example value, the response time for the specific device and configuration must be determined)
- Multiple sampling 2

$t_{OPM\_Feat\_Add\ (Muting)}$ = 10 ms / 2 = 5 ms

Total time: 1,000 ms + 60 ms + 0 ms + 5 ms = 1,065 ms

4.3.11 Object pattern recognition

Overview

Object pattern recognition enables human-material differentiation without additional signals. The ESPE is mounted with a horizontal protective field in order to detect objects that pass through the protective field.

The objects enter the protective field via the entry area and leave the protective field via the exit area. The entry and exit areas are located at the edge of the ESPE.

Whether an object is classified as valid depends on the configuration in Safety Designer.

Object pattern recognition is an alternative to muting in suitable applications. However, the use of object pattern recognition requires a careful risk analysis in the context of the respective application. The function should only be used if it demonstrably improves the reliability and thus the safety of the system.

Object pattern recognition should only be used if the following can be ruled out:

- A person is recognized as a valid object.
- A person together with an object is recognized as a valid object, e.g., a person carrying a box or briefcase.
- A person travels unintentionally with an object, e.g., on a conveyor belt.

The following applications with a horizontal protective field can be implemented with object pattern recognition:

- Goods detection
- Pallet detection
- Object entry monitoring
- Object pattern recognition (general)

Prerequisites

- Function package DCM4
- Software configuration
- The ESPE is mounted with a horizontal protective field and a horizontal protective field alignment is configured.
- The safeguard has a protective field height of at least 750 mm. [7)]
- The protective field height corresponds to at least the maximum object size plus 150 mm. If a reduced resolution is configured and ignored objects are located directly next to a valid object, the number of reduced beams must also be taken into account when determining the required protective field height.
- Manual setting of the protective field width is configured.
- Multiple sampling is configured with 2 scans.
- The maximum object speed is 2 m/s.
- If more than one object is permitted in the protective field, the distance between 2 objects must always correspond to at least one beam: 10 mm with a resolution of 14 mm, or 25 mm with a resolution of 30 mm.
- An internal or external restart interlock must be used.

7) The protective field height is a fixed property of the device. For a horizontal protective field alignment, this device property determines how long the protective field is.

Functionality

As long as the ESPE detects only valid objects in the protective field, the OSSDs remain in the ON state. If, on the other hand, the ESPE detects an invalid object in the protective field, the OSSDs switch to the OFF state and the machine is switched off.

Stopping and restarting a valid object is permitted and does not lead to the OSSDs being switched off.

Further topics

- "Object pattern recognition (general)", page 92
- "Goods detection", page 88
- "Pallet detection", page 90
- "Object entry monitoring", page 91

4.3.11.1 Goods detection

Overview

Goods detection enables access protection where individual objects, e.g., parcels or goods on a pallet, have access to a system or machine. If other objects, e.g. people, enter the protective field, the OSSDs switch to the OFF state.

The goods detection application is preconfigured in Safety Designer.

The following parameters can also be activated or adjusted:

- Maximum object size (default setting: maximum value for the protective field height)
- Direction detection
- Object size monitoring
- Object gaps
- Object size comparison

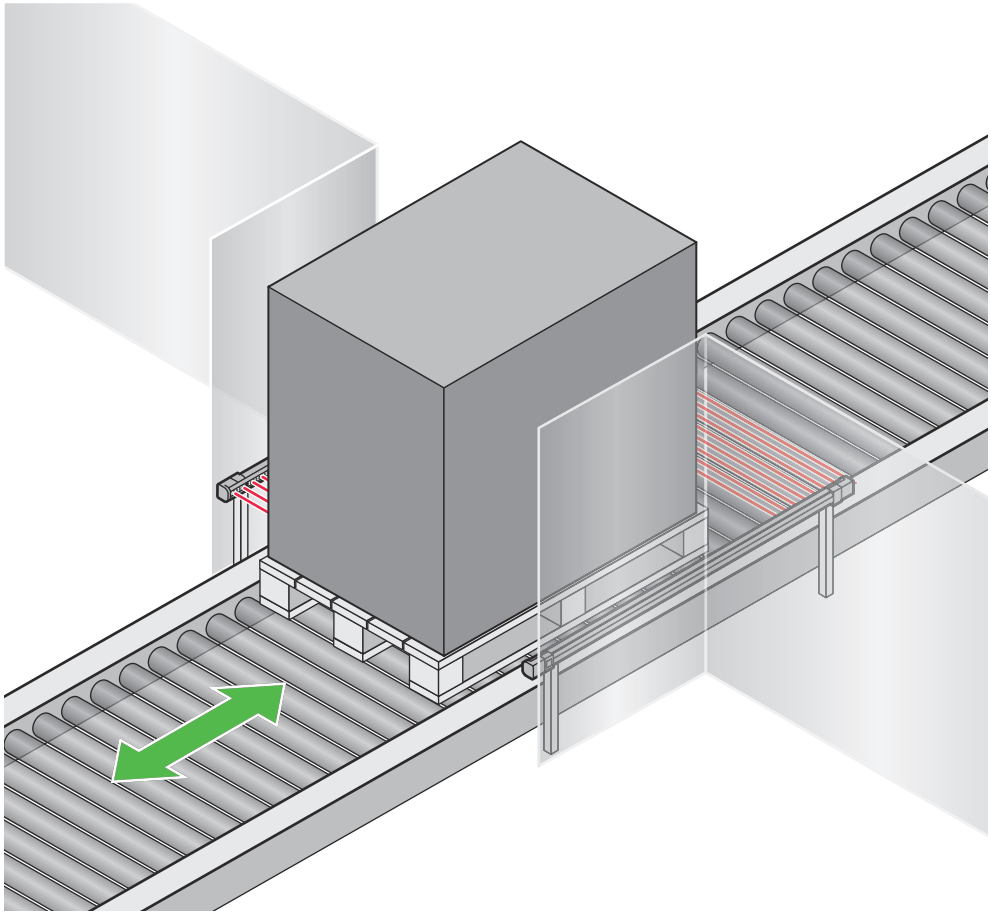

Figure 37: Example application: goods detection

Prerequisites

- The beams of the ESPE are aligned with the individual object.
- There is a maximum of one object in the protective field at any one time.
- Minimum object size:
  - Device with a resolution of 14 mm: 494 mm
  - Device with a resolution of 30 mm: 505 mm
- The object blocks access to the hazardous area so that people cannot enter the hazardous area next to the object.

Functionality

The ESPE is mounted with a horizontal protective field in the direction of transport of the objects. The beams of the ESPE are aligned with the parcels or goods on the pallet.

A single object must consecutively interrupt the first, second, third beam, etc. when entering the protective field. When the object exits, the object must release the beams of the ESPE one after the other.

Further topics

- "Object size", page 94
- "Direction detection", page 97
- "Object size monitoring", page 99
- "Object gaps", page 96
- "Object size comparison", page 100

4.3.11.2 Pallet detection

Overview

Pallet detection enables access protection where, for example, pallets, lattice boxes or trolleys have access to a system or machine. If other objects, e.g. people, enter the protective field, the OSSDs switch to the OFF state.

With pallet detection, more than 2 objects can be monitored simultaneously in the protective field. In addition, the distance between the objects is monitored as they pass through.

The pallet detection application is preconfigured in Safety Designer.

The following parameters can also be activated or adjusted:

- Direction detection

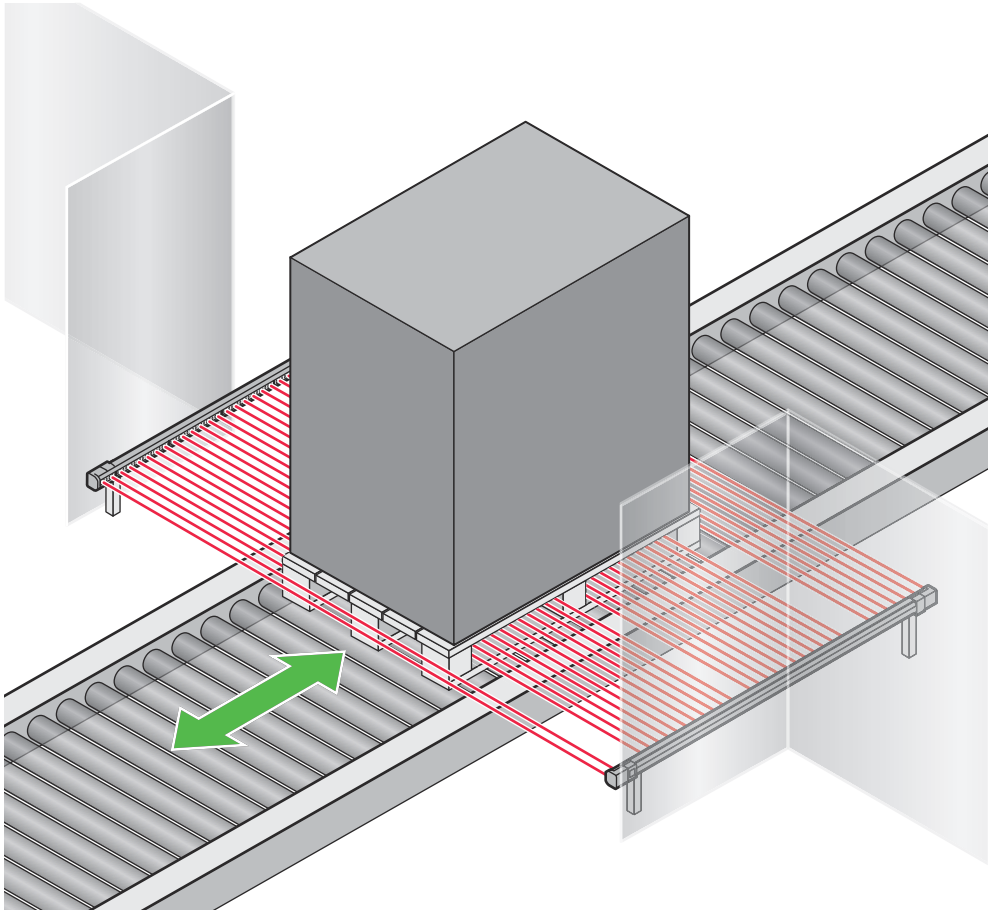

Figure 38: Example application: pallet detection

Prerequisites

- The beams of the ESPE are aligned with the pallet feet as objects.
- At least 2 objects are detected in the protective field before the protective field becomes clear.
- Maximum object size:
  - Device with a resolution of 14 mm: 240 mm
  - Device with a resolution of 30 mm: 225 mm
- The distance between the objects remains constant during object passage within the tolerances.

Functionality

The ESPE is mounted with a horizontal protective field in the direction of transport of the objects. The beams of the ESPE are aligned with the feet of a pallet or lattice box. Several objects per pallet then enter the protective field.

A single object must consecutively interrupt the first, second, third beam, etc. when entering the protective field. If another object enters the protective field, the object separation is determined. The object separation may only change within the tolerances when passing through the protective field. When the object exits, the object must release the beams of the ESPE one after the other.

Further topics

- "Direction detection", page 97
- "Object separation monitoring", page 99

4.3.11.3 Object entry monitoring

Overview

Object entry monitoring monitors the direction of transport of objects. The function is used exclusively at the output of a system or machine. This means that objects can only move out of a system and no persons can enter the hazardous area.

Object entry monitoring is particularly suitable for monitoring pallets that cannot satisfy the pallet or goods detection parameters. These can be, for example, pallets that are only partially wrapped in film or where a small part – such as a single foot – is permanently visible in the protective field (e.g. Düsseldorf pallets or CHEP pallets, where the usual wooden blocks have been replaced by narrow steel stringers).

When using object entry monitoring, the mounting direction of the ESPE must be taken into account and direction detection must be configured. Depending on the installation situation, the permitted object entry and the permitted object movement must be configured either on the side near to the system plug or on the side far from the system plug.

The object entry monitoring application is preconfigured in Safety Designer.

The following parameters can also be activated or adjusted:

- Minimum and maximum object size (default setting: maximum value for the protective field height)

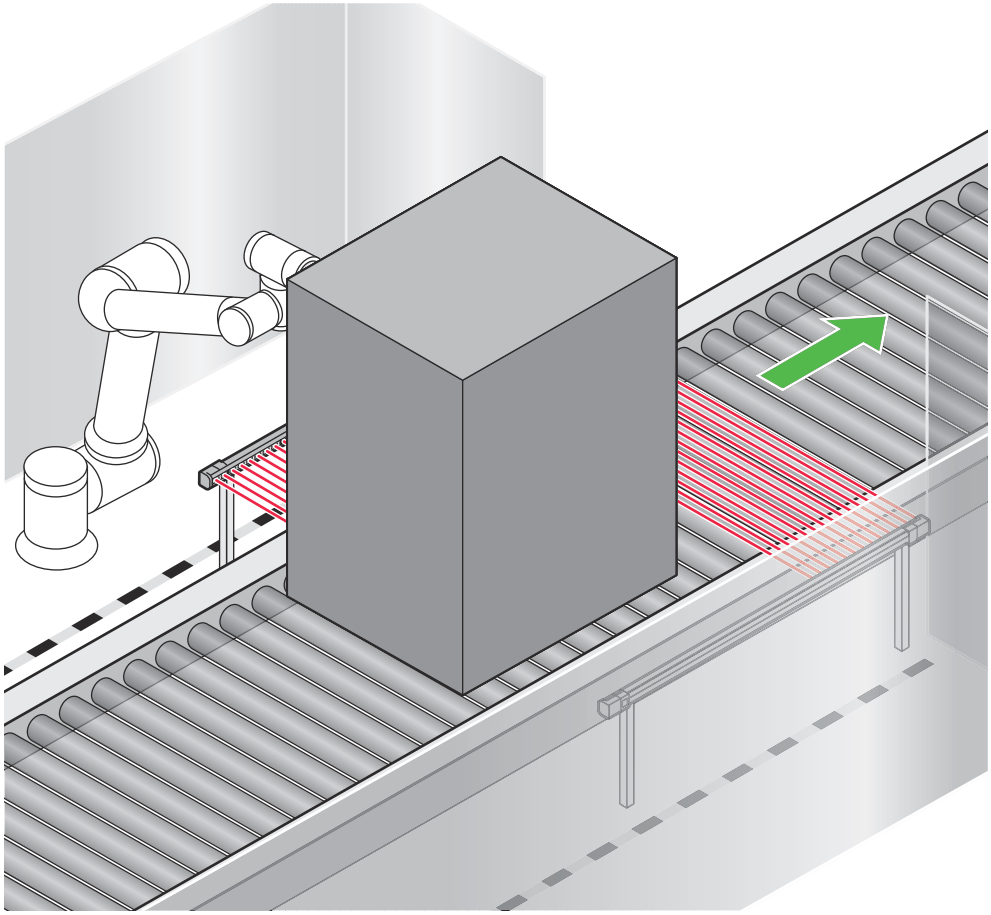

Figure 39: Example application: object entry monitoring

Prerequisites

- The direction of transport is exclusively towards the exit from the hazardous area.

Functionality

The ESPE is mounted with a horizontal protective field in the direction of transport of the objects.

A single object must consecutively interrupt the first, second, third beam, etc. when entering the protective field. No object separation monitoring is active. This means that if there are several objects in the protective field, the objects are allowed to move away from or closer to each other. Once detected, however, objects must not "merge". When the object exits, the object must release the beams of the ESPE one after the other.

Further topics

- "Object size", page 94
- "Direction detection", page 97

4.3.11.4 Object pattern recognition (general)

Overview

Object pattern recognition (general) enables access protection where complex objects, e.g. transport carriages, have access to a system or machine. The objects are monitored in the protective field. If other objects, e.g. people, enter the protective field, the OSSDs switch to the OFF state.

Object pattern recognition (general) requires careful risk analysis. The function should only be used if it demonstrably improves the reliability and thus the safety of the system. The project planning, mounting and configuration of the safety light curtain must be carried out in an application-specific manner so that no persons or body parts are recognized as valid objects and can therefore pass through the protective field. It must also be ensured that people cannot enter the hazardous area undetected next to an object, e.g., by the object blocking access to the hazardous area.

Object pattern recognition (general) can be flexibly adapted to the specific application in Safety Designer. To do so, you can individually configure the parameters for object pattern recognition in Safety Designer.

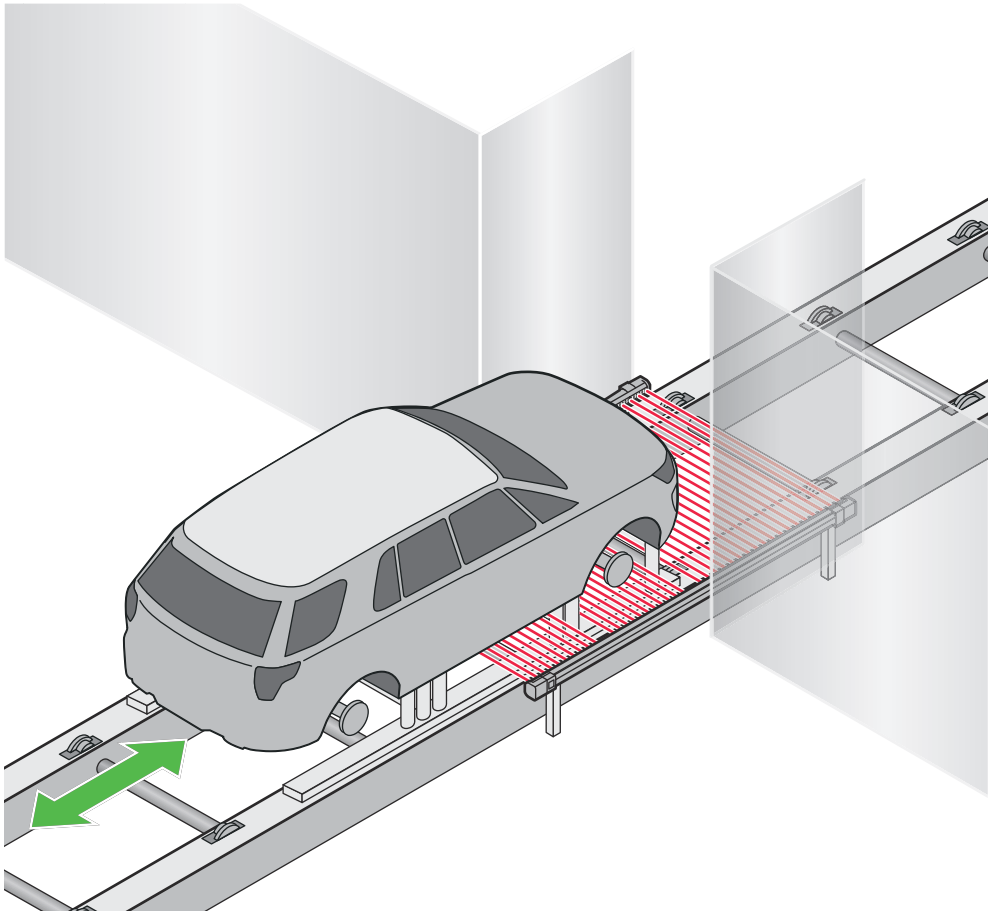

Figure 40: Example application: object pattern recognition (general)

Functionality

The ESPE is mounted with a horizontal protective field in the direction of transport of the objects. The beams of the ESPE are aligned, for example, with the rails of a transport carriage. Several objects per transport carriage then enter the protective field. The objects are monitored in the protective field. If other objects, e.g. people, enter the protective field, the OSSDs switch to the OFF state.

Configurable parameters for object pattern recognition (general)

To ensure that people or parts of a person's body do not unintentionally pass through the protective field, the parameters for object pattern recognition (general) can be customized.

The configuration of the parameters depends both on the mounting height and on whether a person is recognized as a single object or as multiple objects.

The configuration of the following parameters of object pattern recognition (general) can support the safe detection of people:

1. Detection of a person or parts of a person's body as multiple objects
   - Object size: Only objects that are smaller than the parts of a person's body.
   - Direction detection (exit only)
   - Object separation monitoring
   - Object size monitoring
   - Sequence monitoring with object separation monitoring
2. Detection of a person as a single object
   - Object size: Only objects that are larger than a person.
   - Direction detection (exit only)
   - Minimum number of objects: At least 2 objects in the protective field
   - Object size monitoring

Further topics

- "Parameters for object pattern recognition", page 94

4.3.11.5 Parameters for object pattern recognition

Overview

in Safety Designer, you define which objects are recognized as valid objects during object pattern recognition and are allowed to pass through the protective field. You do so by configuring various object pattern recognition parameters.

In the preconfigured goods detection, pallet detection and object entry monitoring applications, some parameters are preset and cannot be changed.

With general object pattern recognition, you can configure the parameters individually and thereby adapt them flexibly to your application.

The following parameters are available:

- Object size
- Object separation
- Number of objects
- Direction detection
- Sequence monitoring
- Object size comparison
- Object size monitoring
- Object separation monitoring
- Object gaps

4.3.11.5.1 Object size

Overview

You can configure in Safety Designer up to 5 objects with a minimum and maximum object size.

The configured objects and the permitted number of objects in the protective field are independent of each other. For example, you can configure 5 different objects, but only ever allow a maximum of one object in the protective field. Alternatively, it is also possible, for example, to configure only one object and allow several objects in the protective field at the same time.

Prerequisites

- In combination with a reduced resolution, the minimum object size for each configured object is larger than the configured number of beams at a reduced resolution.

Functionality

If object pattern recognition is active, only objects that correspond to the configured object size may pass through the protective field.

Calculation of the minimum and maximum object size

To ensure a valid object is reliably detected, you can calculate the minimum and maximum object size depending on the physical resolution as follows:

Table 36: Calculation of the object size to detect a valid object

Physical resolution	Minimum object size	Maximum object size
14 mm	(n - 1) * 10 mm + 14 mm Where: n ≥ 1	m * 10 mm
30 mm	(n - 1) * 25 mm + 30 mm Where: n ≥ 1	m * 25 mm

n = Number of configured beams for the minimum object size.

m = Number of configured beams for the maximum object size.

Calculation of the object size that safely leads to shutdown

To ensure an invalid object is safely detected, you can calculate the object size depending on the physical resolution as follows:

Table 37: Calculation to ensure safe shutdown with small or large objects

Physical resolution	Safe shutdown for objects smaller than	Safe shutdown for objects larger than
14 mm	(n - 2) * 10 mm + 6 mm Where: n ≥ 2	m * 10 mm + 14 mm
30 mm	(n - 2) * 25 mm + 20 mm Where: n ≥ 2	m * 25 mm + 30 mm

n = Number of configured beams for the minimum object size.

m = Number of configured beams for the maximum object size.

Example calculation

The example shows the calculation of a minimum and maximum object size with a physical resolution of 14 mm. The objects of this size are recognized as valid objects.

Example:

- n = 4 beams
- m = 7 beams

Minimum object size: (4 - 1) * 10 mm + 14 mm = 44 mm

Maximum object size: 7 * 10 mm = 70 mm

An object with a size between 44 mm and 70 mm is recognized by the system as valid and is allowed to pass through the protective field.

4.3.11.5.2 Number of objects

Overview

You can define in Safety Designer both a minimum and a maximum number of objects.

Functionality

For the minimum number of objects option, the safeguard must detect the specified minimum number of objects simultaneously in the protective field before an object can leave the protective field. Otherwise, the OSSDs switch to the OFF state.

For the maximum number of objects option, the specified number of objects that are in the protective field at the same time must not be exceeded. Otherwise, the OSSDs switch to the OFF state.

The maximum permissible number of objects in the protective field depends on the protective field height and the configured reduced resolution. [8)]

The following values are obtained for a physical resolution of 14 mm or 30 mm:

Table 38: Number of objects depending on the protective field height and the reduced resolution

	Physical resolution 14 mm		**Physical resolution 30 mm**	
	Maximum permissible number of objects		Maximum permissible number of objects	
Protective field height, in mm	0 ≤ reduced resolution ≤ 5	5 < reduced resolution ≤ 10	0 ≤ reduced resolution ≤ 2	3 beams for reduced resolution
750	3	2	4	3
900	4	3	4	3
1050	4	3	5	4
1200	4	3	5	5
1350	5	4	5	5
1500	5	4	5	5
1650	5	4	5	5
1800	5	4	5	5
1950	5	5	5	5
2100	5	5	5	5

4.3.11.5.3 Object gaps

Overview

You can configure in Safety Designer that object gaps of a defined size are ignored during object pattern recognition.

Prerequisites

- Only one object is allowed in the protective field.
- For object gaps of one beam, the object must have an object size of at least 3 beams.
- For object gaps of 2 beams, the object must have an object size of at least 4 beams.

Functionality

The ESPE recognizes object gaps of a certain size. Object gaps that are within the configured size are ignored and the object is allowed to pass through the protective field.

8) The protective field height is a fixed property of the device. For a horizontal protective field alignment, this device property determines how long the protective field is.

Maximum size of an object gap

To ensure availability, object gaps must not exceed the following sizes:

Table 39: Maximum size of an object gap

Physical resolution	Maximum size of an object gap depending on the configuration		
	No object gap	Object gap = 1 beam	Object gap = 2 beams
14 mm	0 mm	6 mm	16 mm
30 mm	0 mm	20 mm	Not allowed

If object gaps are also configured with a reduced resolution and gaps can be located at the edge of an object, the number of reduced beams must be taken into account when defining the minimum and maximum object size.

4.3.11.5.4 Direction detection

Overview

You can configure in Safety Designer direction detection for object pattern recognition. Objects are then only allowed to enter the protective field from a certain side and only move through the protective field in one direction.

When configuring direction detection, consider the mounting direction of the safety light curtain. Depending on how the safety light curtain is mounted, you can either specify that objects may only enter the protective field at the bottommost light beam (near to the system plug) or only at the uppermost light beam (far from the system plug) and move through the protective field.

Functionality

If direction detection is configured and an object does not move through the protective field according to the configured direction of movement, the object is not recognized as valid and the OSSDs switch to the OFF state.

The maximum tolerance for direction detection is 150 mm.

4.3.11.5.5 Sequence monitoring

Overview

You can configure in Safety Designer sequence monitoring for object pattern recognition.

Prerequisites

- At least 2 objects are configured.

Functionality

If sequence monitoring is active and the objects pass through the protective field in the configured sequence, the objects are recognized as valid. If an object separation has also been configured, this is also taken into account during monitoring.

If the order of the objects and, if applicable, the configured object separation do not match the configuration, the objects are recognized as invalid and the OSSDs switch to the OFF state.

4.3.11.5.5.1 Object separation

Overview

If there are more than 2 objects in the protective field, you can configure in Safety Designer how large the minimum and maximum distance between the objects should be.

A minimum and maximum object separation can only be configured and monitored in conjunction with sequence monitoring.

Prerequisites

- Sequence monitoring is active. Otherwise, the minimum and maximum object separation is not evaluated.
- At least 2 objects are allowed in the protective field.

Functionality

If a minimum object separation and a maximum object separation are defined, then the distance between objects in the protective field must be within these limits.

If the distance between objects is less than the configured minimum object separation or greater than the configured maximum object separation, the OSSDs switch to the OFF state.

Calculation of the minimum and maximum object separation

For reliable detection of a valid separation between objects, you can calculate the minimum and maximum object separation depending on the physical resolution as follows:

Table 40: Calculation of the minimum and maximum object separation

Physical resolution	Minimum object separation	Maximum object separation
14 mm	n * 10 mm	m * 10 mm - 4 mm
30 mm	n * 25 mm	m * 25 mm - 5 mm

n = Number of configured beams for the minimum object separation.

m = Number of configured beams for the maximum object separation.

Calculation of the object separation that safely leads to shutdown

For reliable detection of an invalid object separation, you can calculate an object separation that is too small or too large depending on the physical resolution as follows:

Table 41: Calculation to ensure safe shutdown if the object separation is too small or too large

Physical resolution	Safe shutdown for object separation less than	Safe shutdown for object separation greater than
14 mm	(n - 2) * 10 mm + 6 mm Where: n ≥ 2	m * 10 mm + 14 mm
30 mm	(n - 2) * 25 mm + 20 mm Where: n ≥ 2	m * 25 mm + 30 mm

n = Number of configured beams for the minimum object separation.

m = Number of configured beams for the maximum object separation.

Example calculation

The example shows the calculation of a minimum and maximum object separation with a physical resolution of 14 mm. If the separation is within this range, it is considered valid.

Where:

- n = 4 beams
- m = 5 beams

Minimum object separation: 4 * 10 mm = 40 mm

Maximum object separation: 5 * 10 mm - 4 mm = 46 mm

An object separation in the range of 40 mm to 46 mm is recognized by the system as valid and the objects are allowed to pass through the protective field.

4.3.11.5.6 Object size monitoring

Overview

You can configure in Safety Designer object size monitoring for object pattern recognition. This function is used to monitor whether the object size remains constant while passing through the protective field.

Prerequisites

- Object size comparison is deactivated.

Functionality

When an object enters the protective field, it is compared with the stored minimum and maximum object size. If the detected object size corresponds to the configured object sizes (within the tolerances), the exact object size is saved for the time of passage through the protective field. The OSSDs remain in the ON state as long as the object size does not change beyond the object size tolerances during the passage.

When the object leaves the protective field again, the saved object size is reset. When a new object enters, the process is repeated.

If the temporarily stored object size changes by more than the object size tolerances while the object passes through the protective field, the OSSDs switch to the OFF state.

Further topics

- "Object tolerances", page 100

4.3.11.5.7 Object separation monitoring

Overview

You can configure in Safety Designer object separation monitoring for object pattern recognition. This function is used to monitor whether the object separation remains constant while the objects pass through the protective field.

Prerequisites

- At least 2 objects are allowed in the protective field.

Functionality

If 2 objects enter the protective field, the object separation is compared with the minimum and maximum permitted object separation. If the detected object separation is within the valid range, the exact object separation is stored for the time of passage through the protective field. The OSSDs remain in the ON state as long as the object separation does not change by more than the tolerances during the passage.

When the objects leave the protective field again, the saved object separation is reset. The process is repeated when new objects enter.

If the temporarily stored object separation changes by more than the tolerances while the object passes through the protective field, the OSSDs switch to the OFF state.

Further topics

- "Object tolerances", page 100

4.3.11.5.8 Object size comparison

Overview

You can configure in Safety Designer an object size comparison for object pattern recognition. This function allows only objects of the same size to pass through the protective field. If an object of a different size is detected, the OSSDs switch to the OFF state and the expected object size is updated according to the detected object size.

Prerequisites

- Object size monitoring is deactivated.
- Only one object is allowed in the protective field.

Functionality

When an object enters the protective field, the object size is compared with the stored object size. If the object corresponds to the stored object size within the tolerances, the OSSDs remain in the ON state and the object is allowed to pass through the protective field.

If the object size does not match the saved object size or if no object size has yet been saved, the OSSDs switch to the OFF state and the currently detected object size is saved.

A restart is then possible after actuation of the restart interlock. The object moves out of the protective field and other objects of the same size (within the tolerance limits) can pass through the protective field.

Further topics

- "Object tolerances", page 100

4.3.11.6 Object tolerances

Overview

The following tolerances apply to object size monitoring, object separation monitoring and object size comparison.

The table shows at which change in object size or object separation the object pattern recognition is safely ended and the OSSDs switch off.

Table 42: Object size and object separation tolerances for safe switch-off

Reduced resolution (beams)	Devices with a physical resolution of 14 mm	Devices with a physical resolution of 30 mm
0	±48 mm	±110 mm
1	±68 mm	±160 mm
2	±88 mm	±210 mm
3	±108 mm	±260 mm
4	±128 mm	-
5	±148 mm	-
6	±168 mm	-
7	±188 mm	-
8	±208 mm	-

Reduced resolution (beams)	Devices with a physical resolution of 14 mm	Devices with a physical resolution of 30 mm
9	±228 mm	-
10	±248 mm	-

Object pattern recognition remains reliably active until the object size or object separation changes by the following amount:

- Devices with a physical resolution of 14 mm: ±10 mm
- Devices with a physical resolution of 30 mm: ±25 mm

4.3.11.7 Minimum distance to hazardous point for object pattern recognition

Overview

The minimum distance to the hazardous point when object pattern recognition is configured must be calculated according to ISO 13855.

If pallet detection or object pattern recognition (general) is configured and undetected stepping over the protective field must be taken into account in accordance with ISO 13855, a protective field height [9] of at least 1350 mm instead of 1200 mm is required. For object pattern recognition (general), this only applies if a person's leg can be recognized as a valid object.

An application-dependent supplement Z_{OPR} must be taken into account for the calculation.

Supplement Z_{OPR} for goods detection

Z_{OPR} = 500 mm

Supplement Z_{OPR} for pallet detection

Depending on the mounting height of the ESPE:

- For mounting heights < 650 mm above the reference plane:
  Z_{OPR} = 700 mm
- For mounting height ≥ 650 mm above the reference plane:
  Z_{OPR} = protective field height [9]

Supplement Z_{OPR} for object entry monitoring

Z_{OPR} = 150 mm

Supplement Z_{OPR} for object pattern recognition (general)

The supplement Z_{OPR} depends on the configured objects, the monitoring functions and the mounting height.

The supplement Z_{OPR} must be determined on an application-specific basis. It must be taken into account that people can penetrate further into the protective field undetected due to object pattern recognition than in applications without object pattern recognition.

If one of the following parameters is configured, the smallest of the applicable parameters can be used:

- Direction detection, only exit from hazardous area permitted:

[9] The protective field height is a fixed property of the device. For a horizontal protective field alignment, this device property determines how long the protective field is.

Z_{OPR} = 150 mm

- Configured minimum object size is larger than a person, e.g. > 500 mm:

  Z_{OPR} = object size for safe shutdown
- Configured maximum object size is smaller than the body parts to be detected (depending on mounting height):

  Z_{OPR} = object size for safe shutdown
- Sequence monitoring in combination with a configured maximum object separation:

  Z_{OPR} = configured maximum distance between objects
- Maximum number of objects in the protective field = 1:

  Z_{OPR} = 700 mm
- Minimum number of objects in the protective field > 1 if the violation of the conditions can only be detected when leaving the protective field:

  Z_{OPR} = protective field height [10)]
  - If object separation monitoring is also configured:

    Z_{OPR} = 700 mm

The following parameters can improve safety, but do not in themselves have any influence on the supplement Z_{OPR}:

- Object separation monitoring
- Object size monitoring

4.3.11.8 Operating modes for object pattern recognition

Overview

You can use the Safety Designer configuration software to configure operating modes with object pattern recognition.

To do this, create at least two standard operating modes and change the settings for each of the standard operating modes.

The following settings can be individually configured for each mode:

- Object pattern recognition (activation/deactivation)
- Application for object pattern recognition
- Objects and object sizes (minimum and maximum)
- Object separation (minimum and maximum)
- Maximum permissible number of objects
- Minimum required number of objects
- Direction detection
- Sequence monitoring
- Object size comparison
- Object size monitoring
- Object separation monitoring
- Object gaps

Prerequisites

- Function package DCM4
- Software configuration

10) The protective field height is a fixed property of the device. For a horizontal protective field alignment, this device property determines how long the protective field is.

Conditions for switching to an operating mode for object pattern recognition

The following condition must be met to switch to an operating mode for object pattern recognition:

- The protective field is clear, i.e., there is no unexpected interruption.

The switch to an operating mode is only carried out if the condition for the switch is met. The condition can therefore cause the switchover time to an operating mode to increase.

The operating mode is changed immediately in the following cases, regardless of the conditions:

- The OSSD OFF mode or alignment operating mode is switched to an operating mode for object pattern recognition.
- A standard operating mode in which object pattern recognition is configured as deactivated is switched to an operating mode for object pattern recognition.
- Monitoring of the maximum switchover time is configured and the maximum time has elapsed.
- After switching on, the system switches to an operating mode for object pattern recognition.
- If the laser alignment aid is switched on.

Object pattern recognition is reset when an operating mode is changed. This also applies to all internal statuses, operating data and object pattern recognition monitors. After the operating mode has been changed, a new, complete object pattern recognition cycle is required.

Further topics

- "Operating modes", page 82

4.4 Integration into the electrical control system

Overview

This section contains important information about integration into the electrical control system. Information about the individual steps for the electrical installation of the device: see "Electrical installation", page 140.

Important information

DANGER

Hazard due to lack of effectiveness of the protective device

In the case of non-compliance, it is possible that the dangerous state of the machine may not be stopped or not stopped in a timely manner.

→ Make sure that the following control and electrical requirements are met so that the product can fulfill its protective function.

Requirements for use

The output signals of the protective device must be analyzed by downstream controllers in such a way that the dangerous state of the machine is ended safely. Depending on the safety concept, the signal is analyzed by safety relays or a safety controller, for example.

- It must be possible to electrically influence the control of the machine
- The electrical control system of the machine must meet the requirements of IEC 60204-1

- When using a safety controller, different signal levels of both OSSDs must be detected depending on applicable national regulations or required reliability of the safety function. The maximum discrepancy time tolerated by the controller must be selected according to the application.
- The OSSD1 and OSSD2 output signals must not be connected to each other
- In the machine controller, the signals of both OSSDs must be processed separately

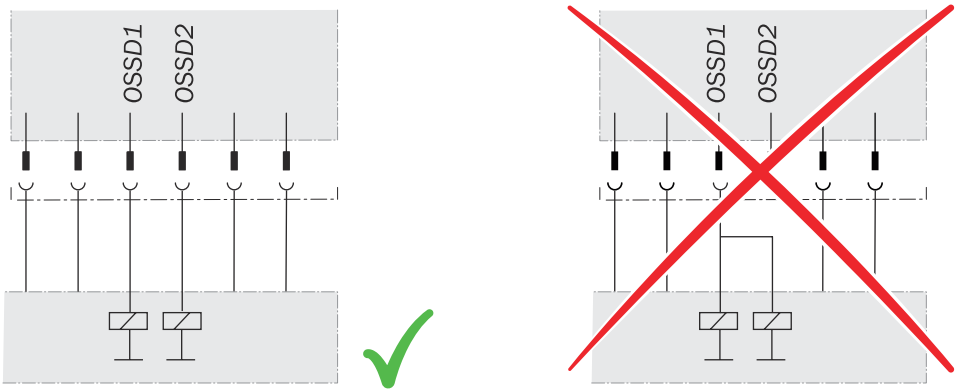

Figure 41: Dual-channel and isolated connection of OSSD1 and OSSD2

- The machine must switch to the safe state at any time if at least one of the two OSSDs switches to the OFF state.
- Prevent the formation of a potential difference between the load and the protective device. If you connect loads to the OSSDs (switch outputs) that then also switch if controlled with negative voltage (e.g., electro-mechanical contactor without reverse polarity protection diode), you must connect the 0 V connections of these loads and those of the corresponding protective device individually and directly to the same 0 V terminal strip. In the event of a fault, this is the only way to ensure that there can be no potential difference between the 0 V connections of the loads and those of the corresponding protective device.

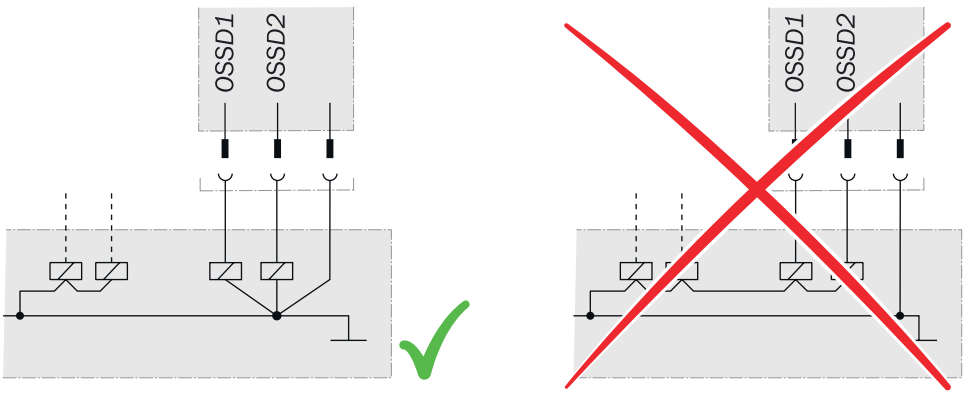

Figure 42: No potential difference between load and protective device

DANGER
Hazard due to lack of effectiveness of the protective device

In the case of non-compliance, it is possible that the dangerous state of the machine may not be stopped or not stopped in a timely manner.

Downstream contactors must be positively guided and monitored depending on applicable national regulations or required reliability of the safety function.

→ Make sure that downstream contactors are monitored (external device monitoring, EDM).

DANGER
Hazard due to unexpected starting of the machine

A restart interlock must be implemented depending on applicable national regulations or required reliability of the safety function.

→ Make sure that a restart interlock is implemented.

Requirements for the electrical control of the machine

Both outputs are short-circuit protected to 24 V DC and 0 V. If a switch-off condition is present (e.g., light path interruption), the OSSDs are in the OFF state. In the event of a device fault, at least one OSSD is in the OFF state.

The protective device complies with the rules for electromagnetic compatibility (EMC) for the industrial sector.

NOTE
Using the device in residential areas may cause radio interference. The operating entity is responsible for taking appropriate measures (e.g., shielding).

The following requirements are met:

- The external voltage supply of the protective device must be capable of buffering brief power failures of 20 ms as specified in IEC 60204-1.
- The power supply unit must provide safe isolation according to IEC 60204-1 (SELV/PELV). Suitable power supply units are available as accessories from SICK.

Further topics

- "Accessories", page 263

4.4.1 Restart interlock

Overview

The restart interlock prevents the machine from automatically starting up, for example after a safeguard has responded while the machine is operating.

Depending on the regulations which apply at the place of installation, a restart interlock may be required.

The safety light curtain has an internal restart interlock.

Important information

DANGER

Hazard due to unexpected starting of the machine

The machine may not restart if the OSSDs switch to the ON state once the reset push-button has been pressed. The control must ensure that the machine only restarts if the machine start button is also pressed after the reset pushbutton.

→ Make sure that the machine can only restart once the reset pushbutton and start button have been pressed in the specified order.

Principle of operation

Before the machine can be restarted, the operator must reset the restart interlock.

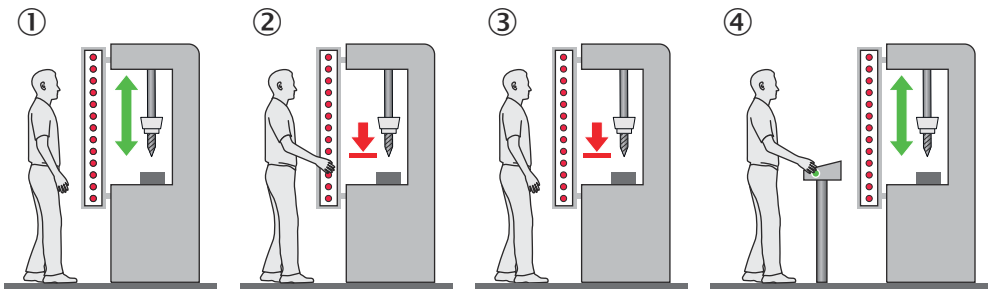

Figure 43: Schematic representation of operation with restart interlock

The dangerous state of the machine (①) is brought to an end if the light path is interrupted (②) and is not re-enabled (③) until the operator presses the reset pushbutton located outside the hazardous area (④). The machine can then be restarted.

Depending on applicable national regulations, a restart interlock must be available if it is possible to stand behind the protective device. Observe IEC 60204-1.

4.4.1.1 Integrated restart interlock and reset

Prerequisites

- A reset device, such as a reset pushbutton, is connected.

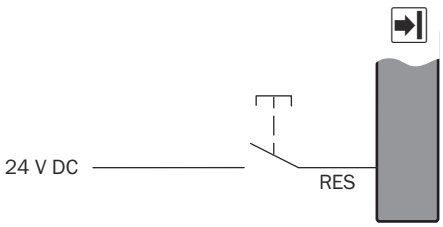

Figure 44: Electrical diagram of the reset device

Using an integrated restart interlock

The restart interlock is configured once the reset pushbutton has been connected.

When configured via the SP1/SP2 system plug and the restart interlock is configured, the application diagnostic output located on the same plug connector as the reset pushbutton signals when the reset pushbutton needs to be pressed.

With a software configuration, the application diagnostic output, which is located on the same plug connector as the reset pushbutton, can be assigned a different signal.

The following applies to the restart interlock:

- If the protective field is clear once the machine has been switched on or following an interruption, the OSSDs do not switch to the ON state
- If someone presses the reset pushbutton and then lets go of it when the protective field is clear, the OSSDs switch to the ON state
- The machine may not restart yet. The operator must also press the machine start button after having pressed the reset pushbutton.

Single system

The reset pushbutton signal can be present at the following inputs in the single system:

- In3 on the M12, 8-pin system connection
- In2 at the extension connection of the receiver
- In10 on the X1 connection of the DMM4 extension module

The reset pushbutton signal may only ever be present at exactly one of the possible inputs.

Cascade

The reset pushbutton signal can be present at the following inputs in a cascade:

- In3 on the M12, 8-pin system connection
- In2 on the extension connection of the last receiver of the guest device
- In10 on the X1 connection of the DMM4 extension module

The reset pushbutton signal may only ever be present at exactly one of the possible inputs.

A total of just one reset pushbutton may be connected to a cascade comprising two or three safety light curtains.

Further topics

- "Configuring the restart interlock", page 162
- "Configuring (smart) restart interlock", page 178

4.4.1.2 Smart restart interlock

Overview

You can also use the integrated restart interlock as an smart restart interlock.

With the intelligent restart interlock, the number of beams interrupted is taken into account each time the protective field is interrupted.

You can define the maximum number of interrupted beams at which the OSSDs automatically return to the ON state after a protective field interruption without you having to press the reset pushbutton.

You can calculate the object size based on the defined number of beams.

The function is active for the entire protective field by default.

For functional scope V 1.3.0 or higher, you can also restrict the area for the smart restart interlock.

Important information

NOTE

If the safety light curtain is configured with an smart restart interlock, it must be ensured that people standing behind the protective field are reliably detected.

The object size (maximum number of beams) must be defined taking into account the regulations applicable at the place of use.

If someone stands behind the protective field, the system must always switch to the "Reset required" status.

If the minimum object size at which the reset pushbutton must be actuated after an interruption of the protective field is > 200 mm, the increased risk of persons standing behind the protective field not being reliably detected by the ESPE must be taken into account.

Prerequisites

- Function package DMM4 or DCM4
- Software configuration
- In combination with reduced resolution or fixed blanking: The configured object size (number of beams) in each operating mode is greater than the sum of the configured object size for reduced resolution and the configured size tolerance for fixed blanking.
- In combination with floating blanking: The configured object size (number of beams) is larger than the configured size tolerance for floating blanking in every operating mode.

Functionality

The protective device detects an object of a certain size and the OSSDs switch to the OFF state.

If the object corresponds to or is smaller than the configured size and no unexpected protective field interruption occurs outside a configured area in the protective field, the OSSDs automatically switch back to the ON state as soon as the object is removed from the protective field. This also applies to multiple objects in the protective field as long as they correspond to or are smaller than the configured size.

If the detected object is larger than the configured size or a protective field interruption is detected outside the area for the smart restart interlock, the system switches to the "Reset required" status.

The following applies to the smart restart interlock:

- The function can be configured on a single system or a host system.
- The function can also be configured for a cascade, but the OSSDs only automatically switch back to the ON state for the host system (depending on the configured object size); the reset pushbutton must always be pressed for guest systems.
- The OSSDs only switch back to the ON state automatically if the OFF state was triggered exclusively by one or more objects in the protective field.
- If the OFF state resulted from other causes or functions (see below), the reset pushbutton must be pressed.

All of the following requirements must be met for automatic restart:

- All objects in the protective field correspond to or are smaller than the configured size.
- There is no unexpected protective field interruption outside a configured area for the smart restart interlock.
- The protective fields of guest devices in a cascade are clear.

- This is not the first activation of the OSSDs after switching on.
- The integrated laser alignment aid is not active.
- No operating mode change was carried out.
- The configured inputs for safety sensors (SDI) are active.
- Muting and override are not active.
- No valid object was detected by Smart Box Detection.
- No blanking error was detected.
- No teach-in for fixed blanking is being performed.
- No error was detected with the reduced resolution (Advanced).

Object size

The object size depends on the physical resolution, the configured number of beams and the configured size tolerance for fixed blanking.

Table 43: Calculation of the object sizes for the smart restart interlock

Physical resolution	Minimum object size at which the reset pushbutton must be safely actuated after a protective field interruption	Maximum object size at which the OSSDs reliably automatically switch back to the ON state after a protective field interruption
14 mm	(n + m) * 10 mm + 14 mm	n * 10 mm
30 mm	(n + m) * 25 mm + 30 mm	n * 25 mm

n = Number of configured beams for the smart restart interlock

m = Maximum number of configured beams for the size tolerance with fixed blanking in all operating modes

Further topics

- "Configuring (smart) restart interlock", page 178

4.4.2 External device monitoring (EDM)

Overview

The protective device has an internal EDM.

The external switching elements (external device monitoring, EDM) must be inspected in line with the regulations which apply at the place of installation or the required reliability of the safety function.

External device monitoring (EDM) monitors the status of downstream contactors.

Prerequisites

- Positively guided contactors are used for shutting down the machine.

Functionality

If you configure external device monitoring, the protective device then checks the contactors after every interruption to the light path and before the machine restarts. External device monitoring is then able to detect if one of the contactor contacts is welded, for instance. In this case, the OSSDs remain in the OFF state.

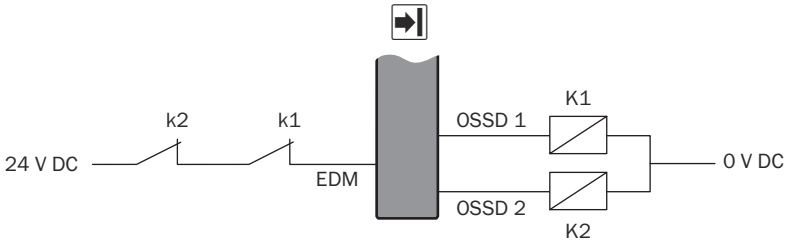

Figure 45: Electrical diagram of external device monitoring (EDM)

You must implement external device monitoring electrically so that the two N/C contacts (k1, k2) close in a positively guided manner when the contactors (K1, K2) reach their de-energized position once the protective device has responded. 24 V is then present at the input of external device monitoring. If 24 V is not present when the protective device has responded, one of the contactors is defective and external device monitoring prevents the machine from restarting.

Connection

The external device monitoring can be connected to one of the following inputs:

- In4 on the M12, 8-pin system connection
- In1 at the extension connection of the receiver

The external device monitoring can only ever be present at exactly one of the possible inputs.

4.4.3 Application diagnostic output

Overview

The ESPE has a application diagnostic output on the M12, 8-pin system connection and on the extension connection of the receiver. Two additional application diagnostic outputs are available via the DMM4 extension module.

Depending on the configuration, the application diagnostic output signals a certain status of the ESPE, e.g., if the reset pushbutton must be engaged or if there is a weak signal at the receiver.

For a signal of the ESPE to be displayed, a light can be connected to the application diagnostic output or the signal can be transmitted to the machine controller.

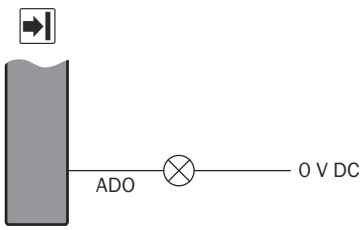

Figure 46: Electrical diagram of the application diagnostic output

Complementary information

The application diagnostic outputs cannot be used for safety-related functions.

When implementing a cascade, the extension connection of the last guest device can be used for the application diagnostic output.

The system automatically detects new guest devices in the cascade. To ensure the system reliably detects new guest devices, the following output signals are not available at the application diagnostic output of the extension connection of the receiver for up to 30 seconds after the system is switched on:

- Weak signal
- Ignored object
- Muting error
- Status of protective field
- Object in the protective field of the guest device (smart presence detection)
- OSSD state
- State of the safety sensor inputs (SDI)
- Blanking or reduced resolution error
- Status of virtual detection field 1 or 2

Further topics

- "Configuring application diagnostic output", page 163
- "Configuring application diagnostic output", page 176

4.4.3.1 Output signals

The device can send the following output signals via the application diagnostic output.

Table 44: Available output signals

Output signal	Explanation	Configuration via system plug [1]	Configuration via Safety Designer [2]
Weak signal	HIGH state: A receiver of the ESPE is receiving a weak signal from the sender, e.g., because the sender and receiver are not correctly aligned or because the front screen is contaminated. LOW state: No weak signal is detected or the OSSDs are in the OFF state.	✓	✓
Ignored object	HIGH state: The ESPE detects an object that is smaller than the configured reduced resolution. LOW state: No ignored object is detected or the OSSDs are in the OFF state.	✓	✓
Reset required	Periodic change between HIGH and LOW: The ESPE is in the "Reset required" status. A connected suitable lamp flashes. LOW state: The ESPE is not in the "Reset required" status.	✓	✓
Muting status	HIGH state: The ESPE is in "Muting" status (the protective effect of the ESPE is temporarily bypassed) or in the "Override" status. LOW status: The ESPE is neither in the "Muting" status nor in the "Override" status.	✓	✓
Override required	Periodic change between HIGH and LOW: An error has occurred during a valid muting condition or a Smart Box Detection condition was violated. The ESPE is in the "Override required" status. A connected suitable lamp flashes. LOW state: The ESPE is not in the "Override required" status.	✓	✓

Output signal	Explanation	Configuration via system plug [1]	Configuration via Safety Designer [2]
Valid object for Smart Box Detection	HIGH state: If Smart Box Detection is configured, a valid object is detected or Smart Box Detection Override is active. LOW state: No valid object is detected and Smart Box Detection Override is not active.	✓	✓
Blanking or reduced resolution error	HIGH state: All blanked objects are detected in the protective field as expected and the maximum number of objects allowed to be ignored for reduced resolution (Advanced) is not exceeded. LOW state: At least one blanked object is not detected in the protective field as expected or the maximum number of objects allowed to be ignored for reduced resolution (Advanced) is exceeded.	-	✓
Valid object for object pattern recognition	HIGH state: If object pattern recognition is configured, only valid objects are detected in the protective field. LOW state: No object or at least one invalid object is detected in the protective field.	-	✓
Muting error	HIGH state: No muting error has occurred. LOW state: A muting error has occurred during a valid muting condition.	-	✓
Muting object in protective field	HIGH state: Muting or override is active and an object is detected in the bypassed part of the protective field. LOW state: Muting or override is not active or no object is detected in the bypassed part of the protective field.	-	✓
Object in the protective field of the guest device (smart presence detection)	HIGH state: An object is detected in the unmonitored protective field of a guest device. LOW state: No object is detected in the unmonitored protective field of a guest device or the protective field of the guest devices is being monitored.	-	✓
OSSD state	HIGH state: The OSSDs are in the ON state. LOW state: At least one OSSD is in the OFF state. When the OSSDs are switched on, the signal is activated after a configured delay of 0 ... 3 s.	-	✓
Status of protective field	HIGH state: All protective fields of the ESPE are clear. There may be valid or ignored objects in the protective field or the protective field is not monitored (intelligent presence detection). LOW state: At least one protective field or a monitored protective field (smart presence detection) of the ESPE is unexpectedly interrupted.	-	✓
Status of virtual detection field 1	HIGH state: All beams in virtual detection field 1 are clear. LOW state: At least one beam in virtual detection field 1 is interrupted.	-	✓
Status of virtual detection field 2	HIGH state: All beams in virtual detection field 2 are clear. LOW state: At least one beam in virtual detection field 2 is interrupted.	-	✓

Output signal	Explanation	Configuration via system plug [1]	Configuration via Safety Designer [2]
State of the safety sensor inputs (SDI)	HIGH state: All configured inputs of the safety sensors (SDI) are active. LOW state: At least one configured input for safety sensors (SDI) is deactivated.	-	✓

1) When configuring via the system plugs, the output signals are assigned automatically according to the other configuration settings.

2) When configuring via Safety Designer, you can manually assign the available output signals.

Application diagnostic outputs can also be assigned to combined output signals. The combinations are possible because the different output signals cannot occur at the same time.

Combinations of functions that cannot be used together (e.g., muting and Smart Box Detection) can also be selected during configuration in Safety Designer. These combinations are to be understood in such a way that either one or the other output signal is output according to the other configuration settings.

Table 45: Combined output signals

Combination	Explanation
Reset required or override required	Periodic change between HIGH and LOW: The ESPE is in the "Reset required" or "Override required" status. A connected suitable lamp flashes. LOW state: The ESPE is neither in the "Reset required" nor in the "Override required" status.
OSSD state or reset required	HIGH state: The OSSDs are in the ON state. Periodic change between HIGH and LOW: At least one OSSD is in the OFF state. The ESPE is in the "Reset required" status. A connected suitable lamp flashes. LOW state: At least one OSSD is in the OFF state. The ESPE is not in the "Reset required" status. When the OSSDs are switched on, the signal is activated after a configured delay of 0 ... 3 s.
(Muting status or valid object for Smart Box Detection) or override required	HIGH state: The ESPE is in the "Muting" status or in the "Override" status. If Smart Box Detection is configured, a valid object is detected or Smart Box Detection Override is active. The ESPE is not in the "Override required" status. Periodic change between HIGH and LOW: The ESPE is in the "Override required" status. A connected suitable lamp flashes. LOW status: The ESPE is neither in the "Muting" status nor in the "Override" status. If Smart Box Detection is configured, no valid object is detected and Smart Box Detection Override is not active. The ESPE is not in the "Override required" status.
(Muting status or valid object for Smart Box Detection or valid object for object pattern recognition) or Reset required or Override required	HIGH state: The ESPE is in the "Muting" status or in the "Override" status. If Smart Box Detection is configured, a valid object is detected or Smart Box Detection Override is active. If object pattern recognition is configured, no valid objects are detected in the protective field. The ESPE is neither in the "Reset required" nor in the "Override required" status. Periodic change between HIGH and LOW: The ESPE is in the "Reset required" or "Override required" status. A connected suitable lamp flashes. LOW status: The ESPE is neither in the "Muting" status nor in the "Override" status. If Smart Box Detection is configured, no valid object is detected and Smart Box Detection Override is not active. If object pattern recognition is configured, no object or at least one invalid object is detected in the protective field. The ESPE is neither in the "Reset required" nor in the "Override required" status.

4.4.3.2 Virtual detection field

Overview

The virtual detection field function can be used to define up to 2 areas within a protective field for separate evaluation, e.g., to signal the positions of objects in the protective field.

A specific number of beams can be defined for each detection field. Each defined detection field must consist of at least one beam and may contain a maximum of as many beams as the device has in total.

The function can be used both in a single system and in a cascade.

Functionality

Up to 2 virtual detection fields can be configured. Each virtual detection field is represented by a single bit. This bit indicates whether the beams within the virtual detection field are clear or interrupted.

The status of the two bits can be used as an output signal for the application diagnostic output, e.g., for further processing or status display.

To avoid faulty alarms, the virtual detection fields are evaluated according to the configured multiple sampling. Other configurable functions, such as reduced resolution, are not taken into account in the evaluation.

- True: All beams of the virtual detection field are clear. No object was detected.
- False: At least one beam of the virtual detection field is interrupted. An object has been detected.

4.4.4 Signal lamp

Overview

You can attach an external signal lamp to the system that outputs the state of the application diagnostic output, e.g., to indicate muting or Smart Box Detection.

In this case, the signal lamp indicates temporary muting or the detection of a valid object by Smart Box Detection during operation.

Prerequisites

- The signal lamp must be visible from all sides of the hazardous area and visible to the operator of the system.

Complementary information

You can optionally use a receiver with an integrated LED. The integrated LED is located in the end cap of the receiver.

4.4.5 Connection of sender and receiver

Overview

If you connect the sender and receiver, you will also receive all relevant information via the sender.

The sender and receiver can be connected to the control cabinet in different ways depending on requirements:

- Separate connecting cables for sender and receiver
- Separate connecting cables for sender and receiver with connection in the control cabinet

- Connection of sender and receiver via a T-connector, shared 5-pin or 8-pin connecting cable to the control cabinet
- Separate connection of sender and receiver to an extension module

Connection of sender and receiver

Connect the sender and receiver to each other in the control cabinet or via a T-connector. Alternatively, you can connect the sender and receiver to the extension module.

Connect the following wires between the sender and receiver in the control cabinet:

- 0 V DC of sender and receiver
- +24 V DC of sender and receiver
- MFP1 of sender and receiver

In a cascade, only the host sender and host receiver are connected to the control cabinet.

The connected sender is detected automatically.

Connection via T-connector

Alternatively, you can connect the sender and receiver to each other via a T-connector (with an optional pushbutton for the laser alignment aid). In such cases, you only require a cable to the control cabinet and the status will also be indicated on both sides. Please note that the sender and receiver are protected jointly by one fuse when a T-connector is used. In the T-connector, all contacts are routed from the female connector to the same pins of both male connectors.

The T-splitter must only be connected to the system connection of an individual device or a host device.

The T-splitter must not be connected to the DMM4 extension module. Instead, connect the sender and receiver directly to the DMM4 extension module.

The T-splitter must not be connected to the system connection or to the connection for the receiver or active unit of the DCM4 extension module. If an operating mode selector switch is also to be used on the DCM4 extension module, both devices can be connected to the 8-pin connection for the sender via a T-splitter.

Information output on both sides

If the sender and receiver are connected to each other, the following information is output on both devices:

- Status of protective field
- OSSD state
- Status display (e.g., muting active)
- Diagnostic data on the sender and receiver via NFC, IO-Link or Safety Designer

If the sender and receiver are not connected to each other, this information is only available on the receiver.

When connecting to the extension module, you can configure both the sender and receiver using the Safety Designer software.

Further topics

- "Accessories", page 263
- "Protection against interference from systems in close proximity to each other", page 35

4.4.6 Laser alignment aid

Overview

The integrated laser alignment aid can be activated in the following ways:

Via the system connection of the sender:
- Switch
- Pushbuttons

Via a sender-receiver connection:
- Safety Designer
- IO-Link
- SICK Safety Assistant app
- Alignment operating mode

The integrated laser alignment aid is active if one of the controllers requests laser activation and is only deactivated if none of the controllers request laser activation.

Important information

DANGER
Hazard due to lack of effectiveness of the protective device

The integrated laser alignment aid switches the OSSDs to the OFF state.

→ Ensure that the outputs of the ESPE have no effect on the machine when the integrated laser alignment aid is activated.
→ Only use the integrated laser alignment aid to align the ESPE.

Prerequisites

Requirements for control via pushbutton/switch
- A pushbutton is connected.
- A T-connector with pushbutton is connected.
- A switch is connected.

Requirements for control via a sender-receiver connection
- The sender and receiver are connected to each other.

Pushbuttons

The pushbutton is mounted at the system connection of the sender between the system plug and the connecting cable.

The pushbutton can be temporarily mounted for alignments or used to maintain a permanent connection.

Functionality of the pushbutton
- Press the pushbutton once and release: integrated laser alignment aid is switched on.
- Press the pushbutton again and release: integrated laser alignment aid is switched off.

Switch

Switches are not suitable for control if the sender and receiver are connected to each other via a T-connector.

The switch is mounted in the control cabinet. A relay or a PLC can also be used as a switch to enable the integrated laser alignment aid to be switched on and off via a control panel, for example.

The switch must be connected in accordance with the circuit diagram below.

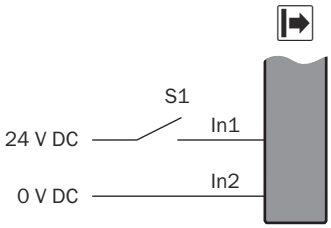

Figure 47: Switch for the integrated laser alignment aid

- S1 closed: integrated laser alignment aid is switched on.
- S1 open: integrated laser alignment aid is switched off.

IO-Link

If the sender and receiver are connected with each other, the laser alignment aid can also be activated by a command from IO-Link.

"IO-Link", page 16

Safety Designer

If the sender and receiver are connected to each other, the laser alignment aid can also be activated via the Safety Designer configuration software.

"Configuration via Safety Designer", page 167

SICK Safety Assistant

If the sender and receiver are connected to each other, the laser alignment aid can also be activated via NFC using the SICK Safety Assistant app.

"Service functions of the mobile app", page 190

Alignment mode

If the sender and receiver are connected to each other, the laser alignment aid can also be activated via the alignment mode.

"Operating mode: Alignment mode", page 85

Muting

Muting is reset when the integrated laser alignment aid is switched on. This also applies to all muting statuses and monitors. After switching off the integrated laser alignment aid, a new, complete muting cycle is required.

Smart Box Detection

Smart Box Detection is reset when the integrated laser alignment aid is switched on. This also applies to all Smart Box Detection statuses and monitors. After switching off the integrated laser alignment aid, a new, complete Smart Box Detection cycle is required.

Object pattern recognition

Object pattern recognition is reset when the integrated laser alignment aid is switched on. This also applies to all statues and object pattern recognition monitors. After switching off the integrated laser alignment aid, a new, complete object pattern recognition cycle is required.

Further topics

- "Connection of sender and receiver", page 114
- "IO-Link", page 120
- "Accessories", page 263

4.4.7 Cascading

Important information

DANGER

Hazard due to lack of effectiveness of the protective device

If 2 or more identical safety light curtains (same resolution and same protective field height) are used in a cascade, the protective device can be disabled if the connecting cables are switched round.

→ Make sure (e.g., by routing the cables appropriately) that the operator is unable to switch round the connecting cables of 2 senders or receivers of the same type.

Integrating safety light curtains in a cascade

You can use cascading to connect up to 3 safety light curtains, e.g., to provide reliable presence detection. The connected devices act like a long safety light curtain. Only one device, the host, is connected to the control cabinet. The second device, guest 1, is connected to the host. The third device, guest 2, is connected to guest 1.

The devices are connected to each other via a 5-pin connection cable to ensure the necessary cascade communication.

The sender or receiver devices must not be mixed with each other within the cascade, i.e., only sender devices may be connected to each other on one side of the cascade, and only receiver devices on the opposite side. A combination of senders and receivers within a cascade is not permitted.

Advantages of cascading:

- Rapid connection, no additional external circuitry required
- The protective field evaluation of the cascaded systems is synchronized.
- No optical mutual interference between the protective fields within a cascade. Host and guests are operated with the same beam coding.
- Resolution and protective field heights of the individual systems may be different

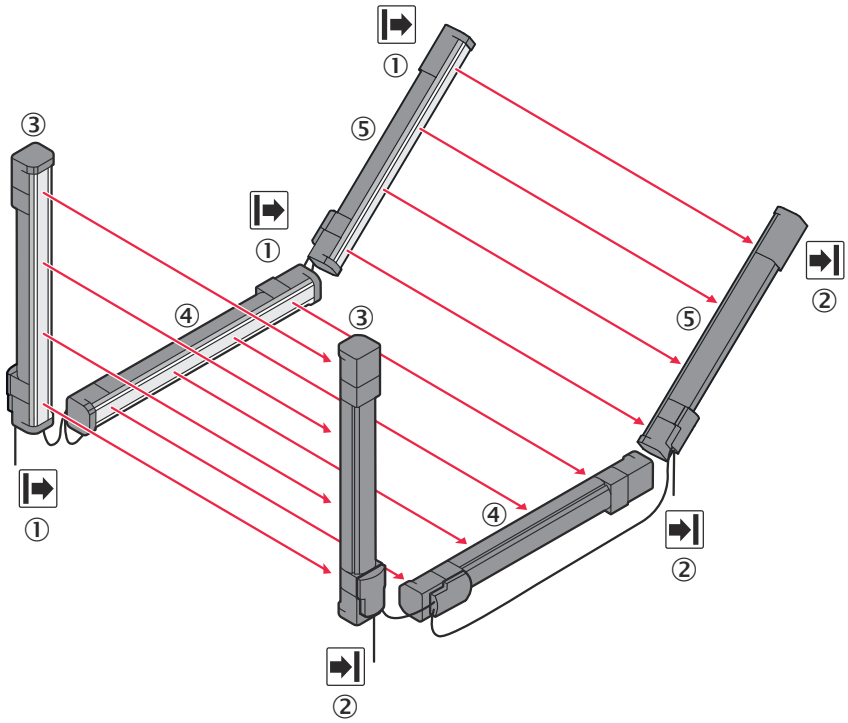

Figure 48: Cascade

① Sender

② Receiver

③ Host

④ Guest 1

⑤ Guest 2

Use of system plugs in a cascade

Information on using the system plug in a cascade can be found at "System plug", page 19.

4.4.8 Smart presence detection

Overview

The safety light curtain features smart presence detection for access and hazardous area protection.

Prerequisites

- Function package SP2 or DMM4 or DCM4

Functionality

Smart presence detection is implemented using a cascade. The guest system is only active if the protective field of the host system has been interrupted. The OSSDs then change to the OFF state and the machine is stopped. As long as the protective field of the host or guest system is interrupted, machine start-up is not possible.

If all of the protective fields have been clear for at least 0.5 s, the OSSDs change back to the ON state and the guest system returns to sleep mode.

If the protective fields of the guest devices in a cascade are not active, errors detected by these guest devices do not cause the OSSDs to switch to the OFF state. Possible errors include, for example, configuration errors or errors triggered by functions such as blanking or reduced resolution.

Smart presence detection prevents an unintentional machine shutdown, for example if chips fall into the hazardous area protected by the guest systems.

4.4.9 IO-Link

Overview

You can connect an IO-Link connector, which is available as an accessory, to the extension connection.

The IO-Link connector is used to establish a connection between suitable devices and an IO-Link master, enabling communication via IO-Link.

You can use IO-Link to read out diagnostic and configuration data (when configuring via the SP1/SP2 system plug) from the connected devices.

The IO-Link connector is also used to connect two signals (e.g., muting signals).

Important information

NOTICE
System functions can be controlled and signals transmitted via IO-Link. This includes, for example, activating the integrated laser alignment aid. The integrated laser alignment aid switches the OSSDs to the OFF state.

No authentication on the system via a user group and password is required for data transmission or for changing data transmitted via IO-Link.

→ Ensure that data cannot be changed unintentionally via IO-Link.

Diagnostic and configuration data

When configuring via the SP1/SP2 system plug, you can access the configuration data via IO-Link. You can use the SDD for SOPAS ET to display the diagnostic and configuration data transmitted via IO-Link.

The following data can be output via IO-Link:

- Application diagnostic output status information
- Device information and device status
- Configuration of the device (when configuring via the SP1/SP2 system plug)
- Status of each individual light beam
- Error history
- Reasons for the last switches to red

Control and signal transmission

The following functions can be controlled via IO-Link:

- LED signal behavior of the field indicator
- LED light behavior of the integrated indicator lamp on the receiver (optional)
- Switching on and off of the integrated laser alignment aid

The following signals can be transmitted via IO-Link:

- Muting release
- Switching from partial muting and muting
- Belt stop
- Operating modes

Complementary information

The product must be supplied with voltage to enable communication with an IO-Link master via the IO-Link connector.

Additional information on connecting the IO-Link connector can be found in the IO-Link connector mounting instructions.

Further topics

- "Accessories", page 263

4.4.10 Muting

Overview

To use muting, muting sensors must be connected to the ESPE.

Facilities for connecting:

- The muting sensors are connected to a muting connector or IO-Link connector.

  The muting connector makes it possible to connect 2 muting sensors and one muting lamp. The muting sensors do not have to be arranged with an offset.
- The signals of the muting sensors are present at the extension connection of the receiver.

  The muting sensors must be offset so that the signals arrive at the device at different times (at least 50 ms apart).
- The signals of the muting sensors are distributed across the 8-pin system connection and the extension connection of the receiver.

  The muting sensors do not have to be arranged with an offset.
- Signals of the muting sensors are present at the DMM4 extension module.

  The muting sensors do not have to be arranged with an offset.

Complementary information

Override can be present at one of the following connections:

- System connection M12, 8-pin
- Extension connection of the receiver
- X1 connection on the DMM4 extension module

When configured via the SP2 system plug, muting override is always active if muting has been configured. The signal for override is then present at the In3 connection on the system connection M12, 8-pin.

Detailed information on using the muting connector can be found in the mounting instructions for the muting connector.

Further topics

- "Cross-circuit monitoring", page 53
- "Electrical installation", page 140
- "Accessories", page 263

4.4.10.1 Distributing muting signals

Overview

For the cross muting and exit monitoring muting variants , you can connect two muting signals to the DMM4 extension module, to the extension connection of the receiver, or to the 8-pin system connection.

For the entry/exit monitoring muting variant, you can connect four muting signals to the DMM4 extension module.

Distributing muting signals (two muting sensors)

In the normal configuration, the muting signals are present at In1 and In2 of the extension connection of the receiver. If the muting signals are present at In1 and In2 of the extension connection of the receiver and no muting connector or IO-Link connector is used, the muting sensors can only become active at intervals of at least 50 ms.

If a muting signal is to be supplied by the controller, however, muting signal 1 can be moved from In1 of the extension connection of the receiver to In4 of the system connection (M12, 8-pin).

When using the DMM4 extension module, the muting signals can also be present at the In5 and In6 inputs of the A1 and A2 connections.

Distributing muting signals (four muting sensors)

The muting signals can be present at the In5, In6, In7 and In8 inputs of the A1, A2, B1 and B2 connections of the DMM4 extension module.

Supplementary signals

You can connect supplementary signals for the following functions:

- Muting release
- Switching from partial muting to muting

The following inputs are available for the supplementary signals:

- In3 or In4 on the M12, 8-pin system connection
- In1 or In2 on the extension connection of the receiver
- In10 or In12 on the DMM4 extension module

Belt stop

The following inputs are available for the belt stop function:

- In3 or In4 on the M12, 8-pin system connection
- In17 at the M12, 8-pin system connection (only available when an extension module is connected)

Additional conditions

If the following signals are present at the same connection (8-pin system connection or extension connection of the receiver without using muting connectors or IO-Link connectors), the signals can only become active at intervals of at least 5 ms:

- Supplementary signal for muting release, and supplementary signal for switching from partial muting to muting
- Muting release supplementary signal, and muting signal 1 or 2
- Supplementary signal for switching from partial muting to muting, and muting signal 1 or 2

Further topics

- "System connection (M12, 8-pin)", page 143
- "Extension connection (M12, 5-pin)", page 144

4.4.11 Control switch for Smart Box Detection Override

Overview

Smart Box Detection Override can be present on one of the following connections:

- System connection M12, 8-pin
- Extension connection of the receiver

When configured via the SP2 system plug, Smart Box Detection Override is always active if Smart Box Detection has been configured. The signal for override is then present at the In3 connection on the system connection M12, 8-pin.

Further topics

- "Electrical installation", page 140

4.4.12 Control switches for operating modes

Overview

You can use the following inputs on the extension modules to switch between the operating modes.

X3 connection on the DMM4 extension module:

- In13
- In14
- In15

Sender or operating modes connection on the DCM4 extension module:

- In13
- In14
- In15
- In16

As soon as the connection is used for operating modes, all inputs on the connection are intended for operating mode selection. Even if you only use two operating modes on the DMM4 extension module, for example, you cannot use the third input for other functions.

Further topics

- "Electrical installation", page 140

4.4.13 Inputs for safety sensors (SDI)

Overview

The DMM4 extension module has 2 inputs for safety sensors on each of 3 connections (X1, X2, X3). This allows you to connect up to 3 additional safety sensors with dual-channel outputs.

You can connect safety sensors with the following properties:

- Safety sensors with dual-channel semiconductor outputs (equivalent switching, self-monitored, positive switching (PNP))
  - Example: OSSDs
  - Connections: X1, X2, X3
  - The test pulse width of the connected safety sensors is ≤ 1 ms.
- Dual-channel, contact-based switching elements (equivalent switching)
  - Example: Emergency stop pushbutton
  - Connections: X1, X3

The OSSDs are in the OFF state if at least one configured input for safety sensors is deactivated (LOW state).

Important information

WARNING

Hazard due to lack of effectiveness of the protective device

The manufacturer of the machine must check whether contact-based switching elements can be used and which requirements must be met for the use of contact-based switching elements.

The requirements for the regular thorough check of contact-based switching elements must be defined by the manufacturer of the machine.

DANGER

Hazard due to lack of effectiveness of the protective device

If contact-based switching elements are used and the switching elements or the DMM4 extension module are mounted outside the control cabinet, you must protect the corresponding connection cables from short-circuits and cross-circuits, e.g., by laying them in suitable cable ducts.

Prerequisites

- Function package DMM4
- Software configuration

Functionality

The OSSDs of the protective device switch to the OFF state within the response time (SDI) if at least one configured input for safety sensors is deactivated (LOW state).

The OSSDs of the protective device can only switch to the ON state if all configured inputs for safety sensors are active (HIGH state).

The OSSDs only switch back to the ON state after all configured inputs for safety sensors have been active for at least 50 ms (HIGH state).

Muting is reset to the OFF state when the OSSDs are changed. This also applies to all muting statuses and monitors. If the OSSDs then switch to the ON state, a new, complete muting cycle is required.

4.4.14 Connection diagrams

You can find the connection diagrams at **www.sick.com**. To do so, enter the product part number in the search field (part number: see the entry in the “P/N” or “Ident. no.” field on the type label).

4.5 Testing plan

Overview

The manufacturer of the machine and the operating entity must define all required thorough checks. The definition must be based on the application conditions and the risk assessment and must be documented in a traceable manner.

→ When defining the thorough check, please note the following:
  - Define the type and execution of the thorough check.
  - Define the frequency of the thorough check.
  - Notify the machine operators of the thorough check and instruct them accordingly.

The following thorough checks are often defined in connection with a protective device:

- Thorough check during commissioning and modifications
- Regular thorough check

Thorough check during commissioning and modifications

Before commissioning the machine and after making changes, you must check whether the safety functions are fulfilling their planned purpose and whether persons are being adequately protected.

The protective device and its application must be thoroughly checked in the following situations:

- Before commissioning
- After changes to the configuration
- After changes to the mounting, the alignment, or the electrical connection
- After replacing components (e.g., sender, receiver, extension module)
- After plugging in a system plug

The following points are often helpful for the definition of the thorough check:

- Does the thorough check have to be completed by qualified safety personnel?
- Can the thorough check be completed by personnel specially qualified and authorized to do so?
- Does the thorough check have to be documented in a traceable manner?
- Can the thorough check be carried out according to a check list? (see "Checklist for initial commissioning and commissioning", page 275)
- Do the machine operators know the function of the protective device?
- Have the machine operators been trained to work on the machine?
- Have the machine operators been notified about modifications to the machine?
- Does the hazardous area being secured have to be checked with a test rod? (see "Test rod check", page 125)

→ Define all guidelines for the thorough check.

Regular thorough check

The thorough check is intended to ensure that the safety functions are fulfilling their planned purpose and whether persons are being adequately protected.

The following points are often helpful for the definition of the thorough check:

- Which thorough check must be carried out and how is it carried out?
  - Test rod check, page 125
  - Visual check of the machine and the protective device, page 128
  - Inputs for safety sensors (SDI)
- How often does the thorough check have to be carried out?
- Do the machine operators have to be notified of the thorough check and do they need to be instructed accordingly?

→ Define all guidelines for the thorough check.

4.5.1 Test rod check

Overview

The rod test check is used to check whether the hazardous point is only accessible via the protective field of the safety light curtain and whether the protective device is able to identify each time the hazardous point is approached.

The test is carried out with an opaque test rod whose diameter corresponds to the resolution of the safety light curtain.

If several safety light curtains are connected to each other in a cascade, the complete check for every safety light curtain in the cascade is carried out. During the check, catch the field indicator of the device you are currently testing.

Important information

DANGER
Use of incorrect test rods

Persons or parts of the body to be protected may not be detected in operation.

→ Only use the test rod with the diameter specified on the type label of the safety light curtain.
→ For reduced resolution and/or blanking with size tolerance, use the test rod that is appropriate for the effective resolution of the safety light curtain.
→ With a reduced resolution and configured Smart Box Detection, use the test rod that matches the effective resolution of the safety light curtain with a free protective field.
→ If reduced resolution (Advanced) is configured, take into account the different effective resolutions of the areas.

NOTE
If object pattern recognition is configured, this does not affect the selection of the test rod.

DANGER
Hazard due to unexpected starting of the machine

→ Make sure that the dangerous state of the machine is and remains switched off during the check.
→ Make sure that the outputs of the safety light curtain have no effect on the machine during the check of the components.

DANGER
Hazard due to lack of effectiveness of the protective device

Persons and parts of the body to be protected may not be recognized in case of non-observance.

Do not operate the machine if the field indicator lights up green or yellow during the check!

→ If the field indicator lights up green or yellow during the check (even if only briefly) work must stop at the machine.
→ In this case, the mounting and electrical installation of the safety light curtain must be checked by qualified safety personnel.

NOTE
To test the smart presence detection, interrupt the protective field on the host device so that the OSSDs change to the OFF state. Otherwise, the guest device remains in sleep mode and the test rod check will not be very meaningful.

Prerequisites

- The protective field is clear.
- The field indicator lights up green or flashes yellow.
  The field indicator only flashes yellow if the internal restart interlock is configured and a reset is required.
- If operating modes are configured, a standard operating mode with configuration must be activated.
- If blanking is configured, the configured blanked objects must be detected at the intended position in the protective field.

Procedure

Test rod check without configured object pattern recognition:

1. Move the test rod slowly through the area to be protected (e.g., machine opening), as indicated by the arrow, see figure 49.
2. Watch the field indicator on the receiver during the check. The field indicator on the receiver must continuously light up red. The field indicator must not light up green or flash yellow.

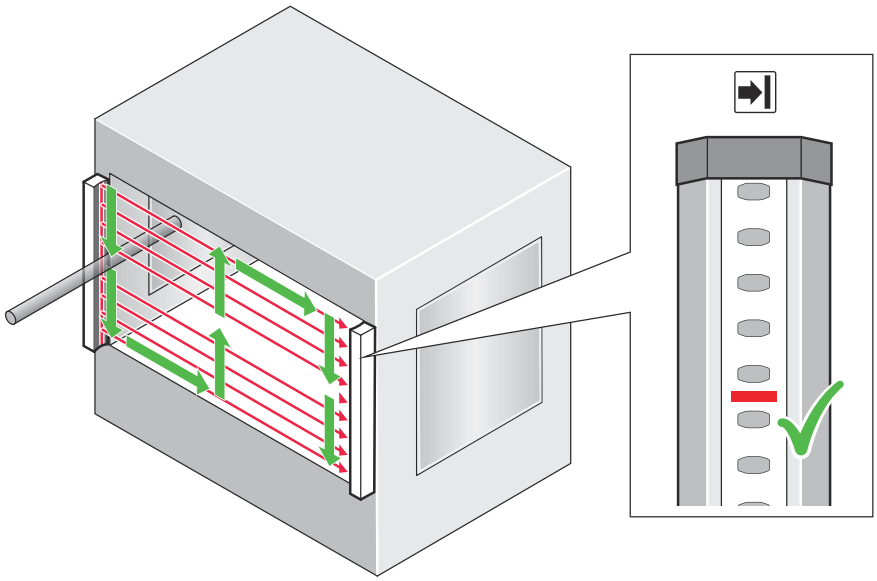

Figure 49: Test rod check: Step 1

3. Then, guide the test rod along the edges of the area to be protected, as indicated by the arrow, see figure 50.
4. Watch the field indicator on the receiver during the check. The field indicator on the receiver must continuously light up red. The field indicator must not light up green or flash yellow.

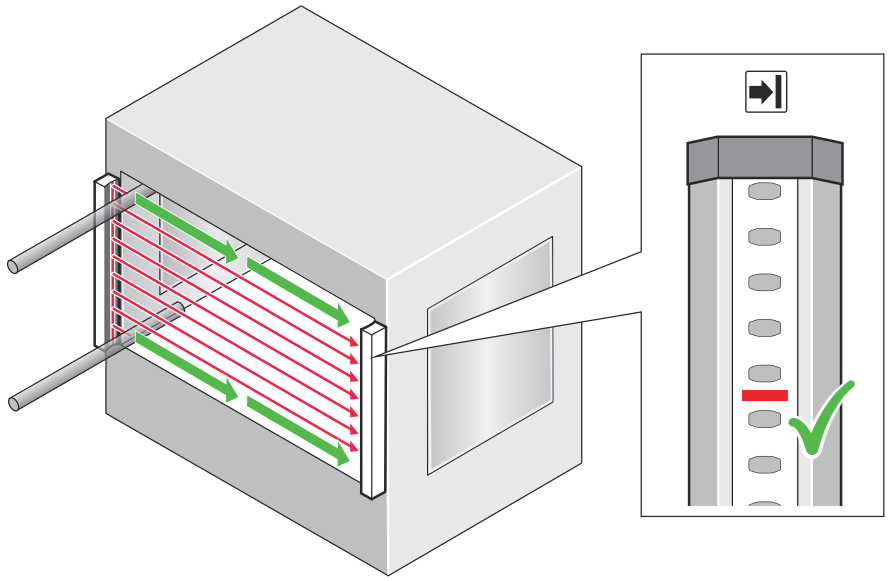

Figure 50: Test rod check: Step 3

5. If one or more deflector mirrors are used, then the test rod should also be guided slowly through the area to be protected directly in front of the deflector mirrors.
6. Watch the field indicator on the receiver during the check. The field indicator on the receiver must continuously light up red. The field indicator must not light up green or flash yellow.
7. After the test rod has been removed from the protective field, make sure that the protective field is clear and the field indicator is green or yellow.
8. If a dynamic protective field width is used, carry out the test rod check with the minimum and maximum protective field width.
9. If multiple devices are connected with each other in a cascade, carry out the entire test for each device of the cascade. During the field indicator test, watch the device that is currently being checked.
10. If a reduced resolution (Advanced) is configured, check each sub-area to be protected using a suitable test rod.
11. If the blanking function is configured, check each sub-area to be protected using a suitable test rod.
12. If more than one operating mode is configured, check the effectiveness of the safeguard for each operating mode combination.

Test rod check with configured object pattern recognition:

1. Guide the test rod from above through the center of the protective field, i.e. outside the entry and exit area. Maintain a distance of at least 200 mm from the edge of the ESPE. Individual beams do not need to be checked.
2. Watch the field indicator on the receiver during the check. The field indicator on the receiver must continuously light up red. The field indicator must not light up green or flash yellow.
3. After the test rod has been removed from the protective field, make sure that the protective field is clear and the field indicator lights up green or flashes yellow again.

4.5.2 Visual check of the machine and the protective device

The following points are often helpful for the definition of the check:

- Has the machine been retrofitted?
- Have machine parts been removed?

- Have modifications been made to the surroundings of the machine?
- Have the protective device or its parts been dismantled?
- Is it possible to enter the hazardous area without being detected?
- Is the protective device damaged?
- Is the protective device severely contaminated?
- Is the front screen contaminated, scratched or destroyed?
- Are there any damaged cables or open cable ends?
- Is the configuration of the protective device still the same?

If one of the points applies, the machine should be shut down immediately. In this case, the machine and the protective device must be checked by appropriately qualified safety personnel.

5 Mounting

5.1 Unpacking

Procedure

1. Check the components for completeness and the integrity of all parts.
2. In the event of complaints, contact the responsible SICK subsidiary.

Further topics

- "Ordering information", page 260

5.2 Fitting the system plug

Overview

You must mount the system plug on the safety light curtain prior to starting mounting and electrical installation work. Please note that depending on the application, the system plug used at the sender may be different to that at the receiver.

Important information

DANGER
Hazard due to lack of effectiveness of the protective device

Malfunctions can occur if the protective device is connected other than with one of the system plugs provided.

→ Use the system plugs provided.

NOTICE
Fitting the system plug

If the system plug is not fitted, electrostatic discharge at the contacts may damage the device.

→ Prevent electrostatic discharge at the contacts.
→ Close the terminal compartment of the device with a protective cover.

NOTICE
Enclosure ratings IP 65 and IP67 only apply if the front connector is fitted.

If the system plug is not mounted, dirt, dust, or moisture may enter the device and cause damage.

→ Fitting the system plug.
→ Prevent the entry of dirt, dust, and moisture.

NOTICE
The IP65 and IP67 enclosure ratings only apply if the protective cover for the DIP switches, which is attached to the SP2 system plug, is securely closed.

Procedure

1. Make sure that the safety light curtain and system plug are disconnected from the voltage supply while the system plug is being mounted.
2. Unpack the system plug.
3. Adjust the DIP switches as necessary.

When using an SP2 system plug, open the protective cover for the DIP switches, set the DIP switches, then securely close the protective cover again.

4. Remove the protective film from the terminal compartment of the safety light curtain.
5. Carefully mount the system plug on the terminal compartment of the safety light curtain.
6. Use the 2 captive screws to screw the system plug onto the safety light curtain. Torque 0.5 Nm ± 0.1 Nm.

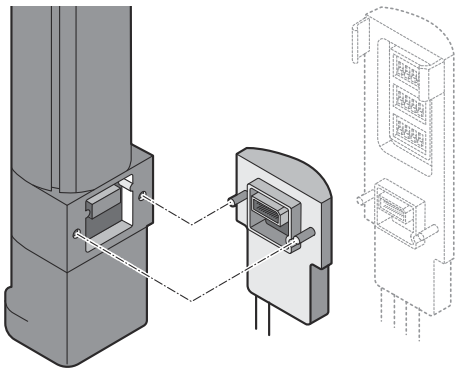

Figure 51: Fitting the system plug

5.3 Mounting

Important information

DANGER

Hazard due to lack of effectiveness of the protective device

Persons or parts of the body to be protected may not be recognized or not recognized in time in case of non-observance.

→ Take into consideration the minimum distances calculated for the machine.
→ Then, mount the safety light curtain such that it is not possible to reach over, under or around, or to stand behind the safety light curtain, and that the light curtain cannot be repositioned.

DANGER

Hazard due to lack of effectiveness of the protective device

Persons and parts of the body to be protected may not be recognized in case of non-observance.

→ The end with the cable connection must point in the same direction for the sender and receiver.

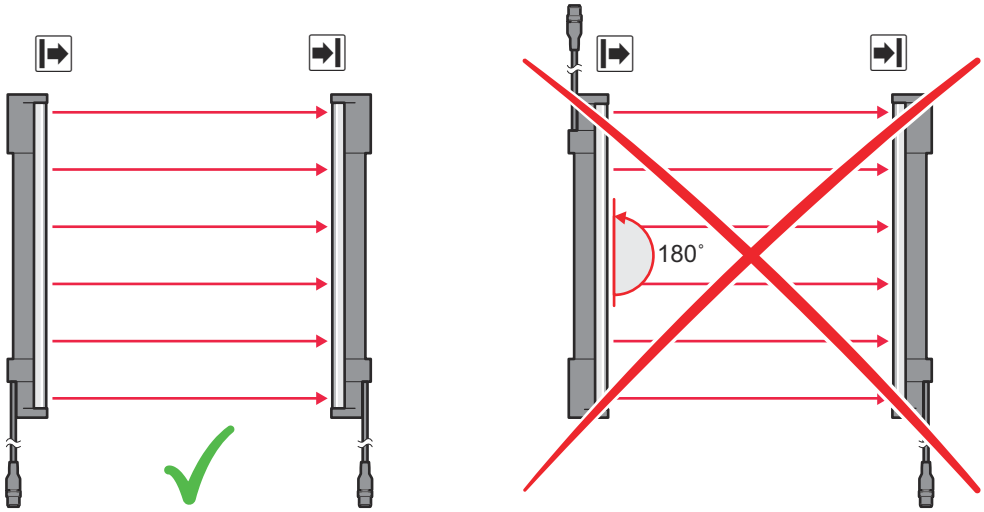

Figure 52: Sender and receiver must not be installed such that they are rotated 180° relative to each other

NOTE

Observe the following when mounting the brackets:

- Select an appropriate length for the screw to prevent any risk of injury from an overrun.

Prerequisites

- Project planning is completed.
- Assembly is carried out according to the project planning.
- Dangerous condition of the machine is and remains switched off during mounting.
- The outputs of the device do not affect the machine during mounting.
- Only use SICK-approved brackets for mounting.
- Take appropriate measures for vibration damping if vibration and shock specifications exceed the values and test conditions specified in the data sheet.

Mounting instructions

→ Mount the sender and receiver on a level surface. (①)

①

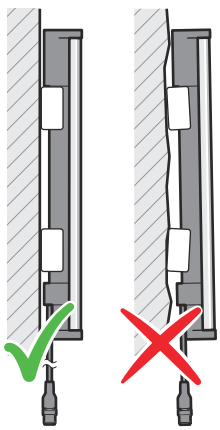

→ Mount the sender and receiver such that a right-angled protective field is established, i.e., when mounted vertically at the same height. (②)

→ For minor adjustments when aligning, the sender and receiver can be adjusted longitudinally in the brackets.

②

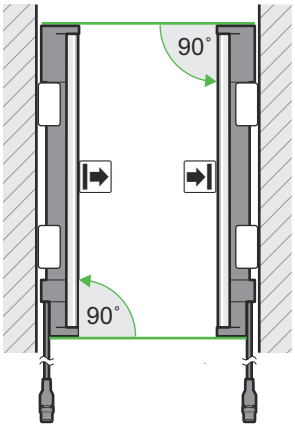

→ Position the brackets near the ends of the housing. For devices with a protective field height > 300 mm, the distance between the bracket and the end of the housing must not exceed 1/4 of the length of the housing. If the device is exposed to strong vibrations during operation, mount the top bracket at a height where the offset in the safety light curtain housing rests on the bracket. (③)

③

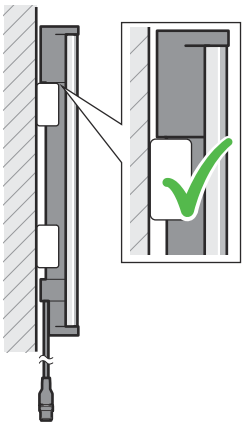

→ Observe the tightening torque details for the particular bracket. Higher torques may damage the bracket. Lower torques do not offer sufficient protection against slipping of the sender and receiver. (④)

④

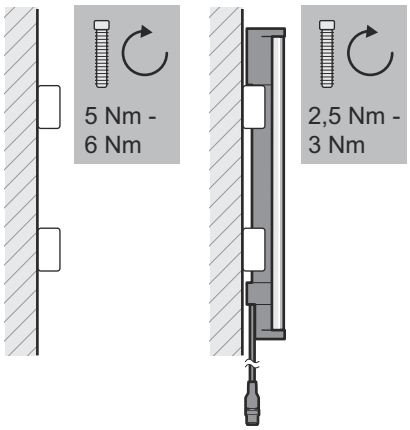

→ Make sure that the sender and receiver are aligned correctly. The optics of the sender and the receiver must be located opposite one another. (⑤)

⑤

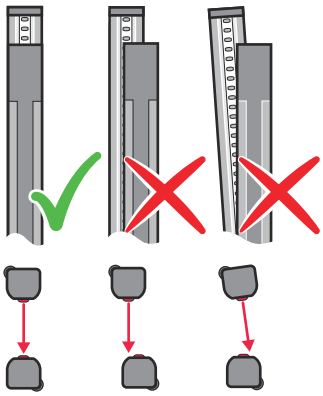

→ If necessary, use a spirit level to check that the components are parallel. (⑥)

⑥

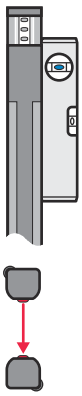

NOTE
If different system plugs are used on the sender and receiver, the bracket cannot be mounted at the same height.

Further topics

- "Minimum distance of the safety light curtain to the hazardous point", page 31
- "Minimum distance from reflective surfaces", page 32
- "Aligning the sender and receiver", page 195

5.3.1 Mounting the QuickFix bracket

Overview

The sender and receiver are each mounted using at least 2 QuickFix brackets.

The QuickFix bracket consists of 2 individual parts that are pushed into each other. The two individual parts are connected using an M5 screw, and the housing (sender or receiver) is clamped with form-fit clamping.

The two mounting surfaces for the brackets of the sender or receiver must be parallel and lie on the same plane.

Important information

NOTE

The following should be considered when mounting the QuickFix bracket:

- When selecting the screw length, observe the wall thickness and the depth of the countersunk screw of the QuickFix bracket.

NOTE

The QuickFix bracket has a cable guide. Depending on the installation, the cable guide can make mounting easier.

Mounting the QuickFix bracket on a machine or profile frame

Table 46: Side and rear mounting with the QuickFix bracket

mounting method	Description
On the side [1]	Fasten the M5 screw to the machine or profile frame through the QuickFix bracket. A screw nut or threaded hole is required on the machine or profile frame (①).
	Fasten the M5 screw to the QuickFix bracket through the machine or profile frame. A screw nut is required for each QuickFix bracket (②).
	Fasten the M5 screw to the profile frame through the QuickFix bracket. A sliding nut is required on the profile frame (③).
On the back	Fasten the M5 screw to the machine or profile frame through the QuickFix bracket. A screw nut or threaded hole is required on the machine or profile frame (④).

[1] If the bracket is attached at the side, no muting arms can be mounted on the protective device.

Tightening torque: 5 Nm ... 6 Nm

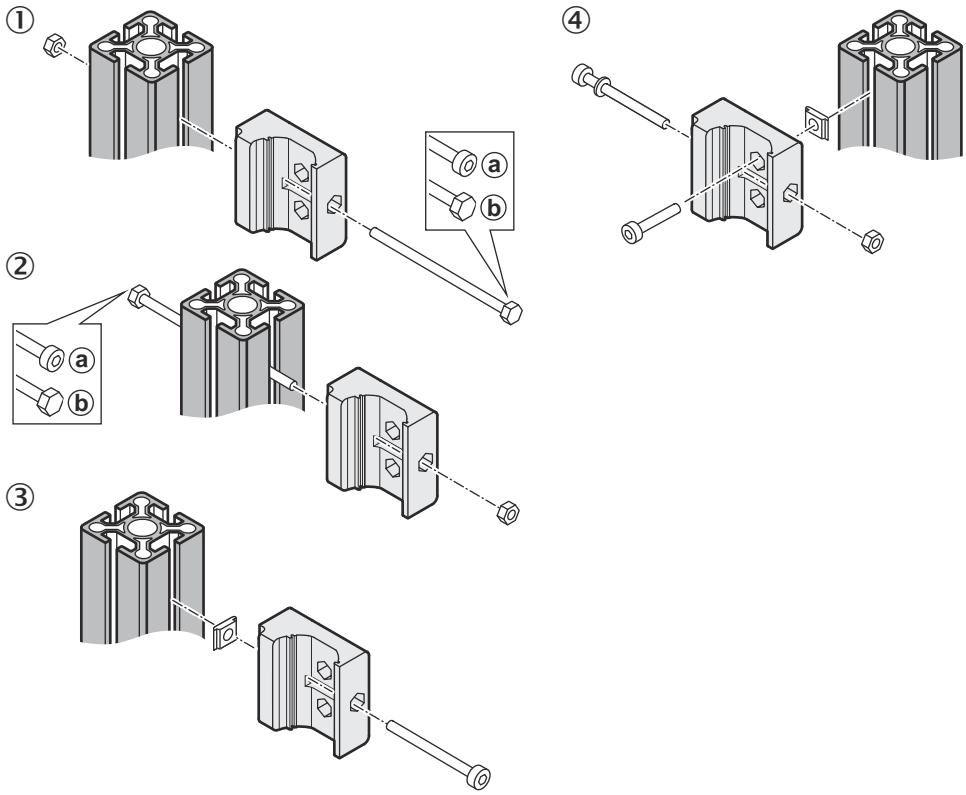

Figure 53: Mounting the QuickFix bracket on a profile

Securing the sender and receiver in the bracket

1. Clamp the housing of the sender and receiver positively in the bracket.
2. Secure the position of the sender and receiver in the bracket using the M5 screw. Torque: 2.5 Nm to 3 Nm

5.3.2 Mounting the FlexFix bracket

Overview

In the FlexFix bracket, the sender and receiver can be rotated ± 15° [11] around their longitudinal axis.

2 FlexFix brackets are used to mount the sender and receiver.

As a rule, each FlexFix bracket is mounted to the flange plate with 2 screws. In exceptional cases (e.g., reduced vibration and shock requirements), a FlexFix bracket can be mounted with only one screw if this does not impair the function.

Important information

NOTICE

The housing of the safety light curtain can become scratched if the screw heads protrude when the FlexFix brackets are mounted on the back.

This can be avoided by taking one of the following measures:

→ Use flat-head screws with washers.
→ If using cylinder head screws, use 2 screws per bracket and no washers.

[11] If muting arms are attached to the sender and receiver, the units can be rotated by ± 5° around their longitudinal axis.

NOTE
The FlexFix mounting kit (part number 2073543) contains 2 FlexFix brackets, one alignment tool, and the required screws, sliding nuts, and washers.

Further topics

- "Brackets", page 263

5.3.2.1 Mounting the FlexFix bracket on a machine or profile frame

Important information

NOTE
When selecting the screw length, the wall thickness of the FlexFix bracket must be taken into account.

Mounting the FlexFix bracket on a machine or profile frame

Table 47: Lateral and rear mounting with the FlexFix bracket

Mounting method	Description
On the side [1]	With the M5 screw through the FlexFix bracket on the machine or profile frame. A screw nut or threaded hole is required on the machine or profile frame (①).
	With the M5 screw through the FlexFix bracket on the profile frame. 2 sliding nuts are required on the profile frame (②).
On the back	With the M5 screw through the FlexFix bracket on the machine or profile frame. A screw nut or threaded hole is required on the machine or profile frame (③).

[1] If the bracket is attached at the side, no muting arms can be mounted on the protective device.

Tightening torque: 5 Nm ... 6 Nm

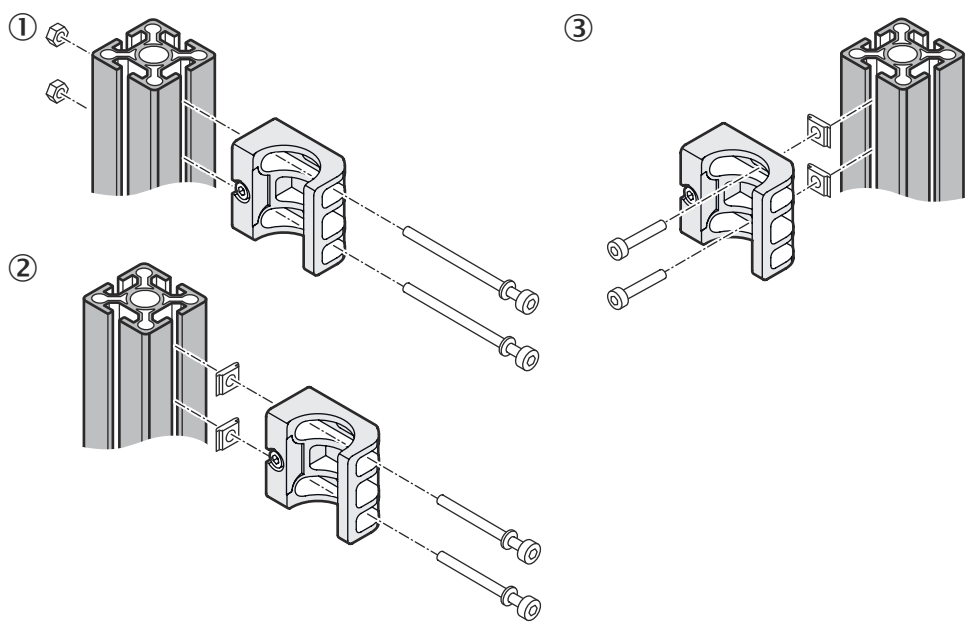

Figure 54: Mounting the FlexFix bracket to a profile frame

Securing the sender and receiver in the bracket

1. After mounting the FlexFix brackets, screw or carefully press the sender and receiver into the FlexFix brackets from the front. (①)
2. Align the sender and receiver. (②)
3. Use an M5 screw to secure the position of the sender and receiver in the FlexFix bracket. (③)
   Torque: 2.5 Nm to 3 Nm

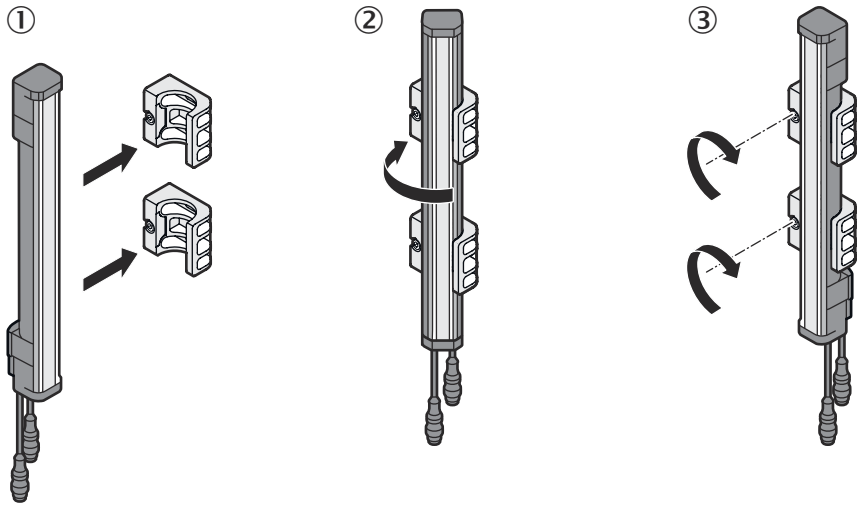

Figure 55: Inserting the safety light curtain in the FlexFix brackets

NOTE

The protective device can only be screwed in when both brackets are in alignment.

Recommendation:

1. Only hand-tighten the screws on the brackets at first.
2. Align the two brackets. To do this, place a straightedge or spirit level, for example, on the screw mounting surfaces of the brackets that are not being used.
3. Tighten the screws.

Further topics

- "Aligning the sender and receiver", page 195
- "Brackets", page 263

5.3.2.2 Mounting the FlexFix bracket on the back of a device column

Overview

The FlexFix bracket can be mounted in the device column using sliding nuts.

For information about mounting on a device column, see the mounting instructions for the respective device column.

Further topics

- "Device columns", page 270

5.3.3 Mounting the replacement bracket

Overview

If an existing C4000 safety light curtain is mounted with a swivel-mount bracket or with a side bracket, it can be replaced with a deTec4 HG safety light curtain using a replacement bracket. There is no need to drill new holes, since the existing ones can be used for the replacement bracket.

Complementary information

Additional information for mounting a safety light curtain with a replacement bracket can be found in the mounting instructions for the replacement bracket.

Further topics

- "Brackets", page 263

6 Electrical installation

6.1 Security

Important information

DANGER
Hazard due to electrical voltage

Hazard due to unexpected starting of the machine

→ Make sure that the machine is (and remains) disconnected from the voltage supply during the electrical installation.
→ Make sure that the dangerous state of the machine is (and remains) switched off during electrical installation.
→ Ensure that the outputs of the device have no effect on the machine during the electrical installation work.
→ Use a suitable voltage supply.

DANGER
Hazard due to lack of effectiveness of the protective device

The dangerous state may not be stopped in the event of non-compliance.

→ Always connect the two OSSDs separately. The two OSSDs must not be connected to each other.
→ Connect the OSSDs such that the machine controller processes both signals separately.

DANGER
Hazard due to lack of effectiveness of the protective device

The dangerous state may not be stopped in the event of non-compliance.

→ Prevent the formation of a potential difference between the load and the protective device.

DANGER
Hazard due to lack of effectiveness of the protective device

Malfunctions can occur if unused inputs are wired incorrectly.

→ Unused inputs must either not be connected or be permanently switched to LOW.

DANGER
Hazard due to lack of effectiveness of the protective device

Malfunctions can occur if unused MFPs are wired incorrectly.

→ Unused MFPs must not be connected.

DANGER
Hazard due to lack of effectiveness of the protective device

Malfunctions can occur if connections of the same type are wired incorrectly, e.g., if connectors are mixed up.

→ Make sure (e.g., by routing the cables appropriately) that connections of the same type cannot be mixed up.
→ After each change to the wiring, ensure that connections of the same type are connected correctly.

NOTE
Use a separate sheathed cable for each M12 connection (exception: M12 connections where wiring is provided via a T-connector).

Prerequisites

- The safety light curtain has been safely integrated into the control system and the electrical system of the machine.
- The safety light curtain is voltage-free.
- Mounting has been completed correctly.
- Unused connections are fitted with protective caps.

Example: Isolated connection of OSSD1 and OSSD2

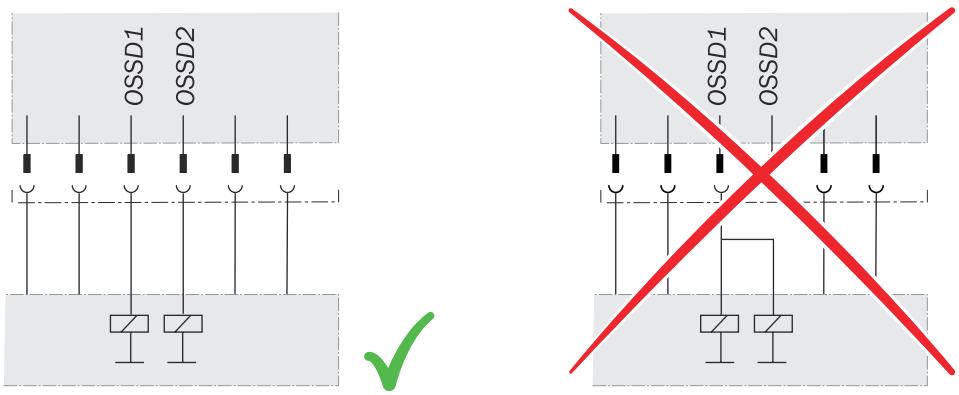

Figure 56: Dual-channel and isolated connection of OSSD1 and OSSD2

Avoiding any potential difference between load and protective device

If you connect loads to the output signal switching devices (switching outputs) that then also switch if controlled with negative voltage (e.g., electro-mechanical contactor without reverse polarity protection diode), you must connect the 0 V connections of these loads and those of the corresponding protective device separately and also directly to the same 0 V terminal strip. In the event of a fault, this is the only way to ensure that there can be no potential difference between the 0 V connections of the loads and those of the corresponding protective device.

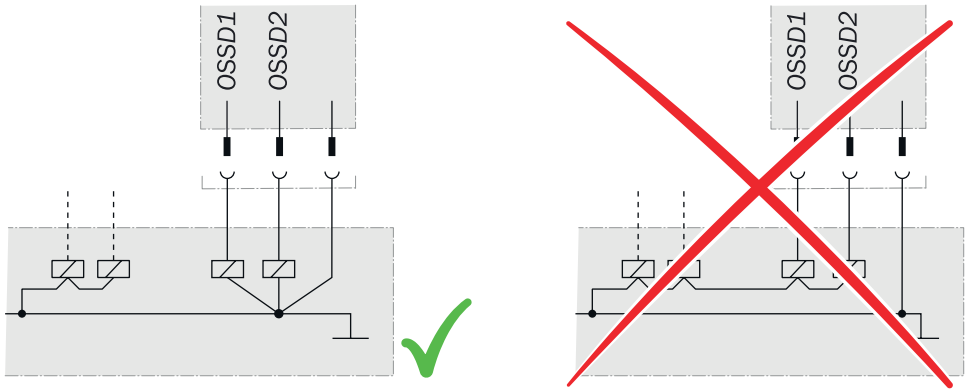

Figure 57: No potential difference between load and protective device

Further topics

- "Integration into the electrical control system", page 103
- "Technical data", page 231

6.2 System connection (M12, 5-pin)

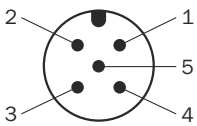

Figure 58: System connection (male connector, M12, 5-pin)

Table 48: System connection pin assignment SP1 or SP2 (male connector, M12, 5-pin)

Pin	Wire color [1]	Sender	Receiver
1	Brown	+24 V DC (voltage supply input)	+24 V DC (voltage supply input)
2	White	In2 Laser alignment aid push-button	OSSD1 (switching output 1)
3	Blue	0 V DC (voltage supply input)	0 V DC (voltage supply input)
4	Black	In1 Laser alignment aid switch or cascade synchronization input	OSSD2 (switching output 2)
5 [2]	Gray	MFP1 Single system or host: Sender communication Guest: Cascade communication	MFP1 Single system or host: Sender communication / communication with extension module Guest: Cascade communication

1) Applies to the connecting cables recommended as accessories.

2) If the sender and the receiver are not connected, pin 5 can remain unassigned for a single system or host and, for example, a 4-pin cable with a 4-pin female connector can be used.

Further topics

- "Integration into the electrical control system", page 103

6.3 System connection (M12, 8-pin)

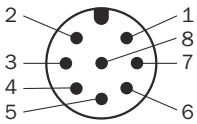

Figure 59: System connection (male connector M12, 8-pin)

Table 49: Pin assignment of SP1 or SP2 system connection (male connector, M12, 8-pin)

Pin	Wire color [1]	Sender	Receiver
1	White	Not assigned	In3 Reset or override [2] or reset/override [2] or belt stop for muting [3] or muting release [3] or switching from partial muting to muting [3] or teach-in for fixed blanking [3]
2	Brown	+24 V DC (voltage supply input)	+24 V DC (voltage supply input)
3	Green	Not assigned	MFP3 ADO (application diagnostic output)
4	Yellow	Not assigned	In4 EDM or muting signal 1 [2] or belt stop for muting [3] or muting release [3] or switching from partial muting to muting [3]
5	Gray	In2 Laser alignment aid pushbutton	OSSD1 (switching output 1)
6	Pink	In1 Laser alignment aid switch or cascade synchronization input	OSSD2 (switching output 2)
7	Blue	0 V DC (voltage supply input)	0 V DC (voltage supply input)
8	Red	MFP1 Single system or host: Sender communication Guest: Cascade communication	MFP1 Single system or host: Sender communication / communication with extension module Guest: Cascade communication

1) Applies to the connecting cables recommended as accessories.

2) Only available via software configuration (with SP1 or SP2) or via configuration on SP2.

3) Only available via software configuration (with SP1 or SP2).

Table 50: Pin assignment of system connection on DMM4 or DCM4 extension module (male connector, M12, 8-pin)

Pin	Wire color [1]	Function
1	White	In3 [2] Reset or override or reset/override or belt stop for muting or muting release or switching from partial muting to muting or teach-in for fixed blanking [3]
2	Brown	+24 V DC (voltage supply input)
3	Green	MFP3 [2] ADO (application diagnostic output)
4	Yellow	In4 [2] EDM or muting signal 1 or belt stop for muting or muting release or switching from partial muting to muting
5	Gray	OSSD1 (switching output 1)
6	Pink	OSSD2 (switching output 2)
7	Blue	0 V DC (voltage supply input)
8	Red	In17 [4] Belt stop for muting

1) Applies to the connecting cables recommended as accessories.

2) Not available if the extension module is connected via a 5-pin adapter (on the system connection of the extension module, or when connecting the extension module to the receiver).

3) Only available in conjunction with a DCM4 extension module.

4) Not available if the extension module is connected via a 5-pin adapter (on the system connection of the extension module).

Further topics

- "Integration into the electrical control system", page 103

6.4 Extension connection (M12, 5-pin)

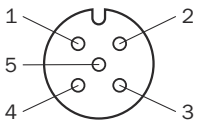

Figure 60: Extension connection (female connector M12, 5-pin)

Table 51: Pin assignment of SP1 or SP2 extension connection (female connector, M12, 5-pin)

Pin	Wire color [1]	Sender	Receiver
1	Brown	24 V Out (voltage supply output) [2]	24 V Out (voltage supply output) [2]

Pin	Wire color [1]	Sender	Receiver
2	White	Not assigned	In1 Single system: EDM [3] or muting signal 1 [4] or muting release [5] or switching from partial muting to muting [5] or teach-in for fixed blanking [5] Host or first of 2 guests: OSSD input Last guest: EDM or teach-in for fixed blanking [5]
3	Blue	0 V Out (voltage supply output)	0 V Out (voltage supply output)
4	Black	Sync-Out (cascade synchronization output, SP1 only)	In2 Single system: Reset or override [5] or reset/override [5] or muting signal 2 [4] or muting release [5] or switching from partial muting to muting [5] Host or first of 2 guests: OSSD input Last guest: Reset
5	Gray	MFP2 (cascade communication, SP1 only)	MFP2 Single system or last guest: ADO (application diagnostic output) or IO-Link Host or first of 2 guests: Cascade communication

1) Applies to the connecting cables recommended as accessories.
2) Only for cascading deTec devices or for connecting suitable devices which are specified as accessories.
3) For configuration via the SP2 system plug: When muting is configured, EDM is not possible on the extension connection.
4) Only available via software configuration (with SP1 or SP2) or via configuration on SP2.
5) Only available via software configuration (with SP1 or SP2).

Complementary information

Two signals (e.g., for muting sensors) can be connected to the extension connection using the muting connector or the IO-Link connector.

Further topics

- "Integration into the electrical control system", page 103

6.5 Additional connections on the DMM4 extension module

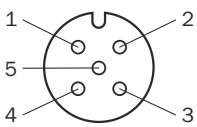

Figure 61: Additional connections on the DMM4 extension module (female connector, M12, 5-pin)

Table 52: Pin assignment of A1, A2, B1, B2 connections (DMM4, female connector, M12, 5-pin)

Pin	Wire color [1]	A1	A2	B1	B2
1	Brown	+24 V DC (voltage supply output)			
2	White	Not assigned			
3	Blue	0 V DC (voltage supply output)			
4	Black	In5 Muting signal	In6 Muting signal	In7 Muting signal	In8 Muting signal
5	Gray	Not assigned			

[1] Applies to the connecting cables recommended as accessories.

Table 53: Pin assignment of X1, X2, X3 connections (DMM4, female connector, M12, 5-pin)

Pin	Wire color [1]	X1	X2	X3
1	Brown	+24 V DC (voltage supply output)		
2	White	In9 Override or input for safety sensors (SDI)	In11 or DO2 ADO (application diagnostic output) or input for safety sensors (SDI)	In13 Operating modes or input for safety sensors (SDI)
3	Blue	0 V DC (voltage supply output)		
4	Black	In10 Reset or override or reset/override or switching from partial muting to muting or muting release or input for safety sensors (SDI)	In12 Switching from partial muting to muting or muting enable or input for safety sensors (SDI)	In14 Operating modes or input for safety sensors (SDI)
5	Gray	DO1 ADO (application diagnostic output)	Not assigned	In15 Operating modes

[1] Applies to the connecting cables recommended as accessories.

6.6 Additional connections on the DCM4 extension module

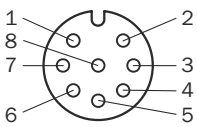

Figure 62: Additional connections on the DCM4 extension module (socket, M12, 8-pin)

Table 54: Pin assignment of sender or operating modes connection (socket, M12, 8-pin)

Pin	Wire color [1]	Function
1	White	In13 Operating modes
2	Brown	+24 V DC (power supply output)
3	Green	In14 Operating modes
4	Yellow	In15 Operating modes
5 [2]	Gray	In16 Operating modes
6 [2]	Pink	
7	Blue	0 V DC (power supply output)

Pin	Wire color [1]	Function
8	Red	COM1 Sender communication

1) Applies to the connecting cables recommended as accessories.

2) Pin 5 and pin 6 are connected to each other internally.

7 Configuration

7.1 Overview

Overview

The following options are available for configuration:

- Configuration via the SP1 or SP2 system plug (including automatic configuration of external device monitoring (EDM), cascades, or application diagnostic outputs, for example)
- Software configuration in Safety Designer via a connected extension module

For devices that were previously configured using the DIP switches, you can switch to the software configuration without resetting the devices to the factory settings. To do this, read out the previous configuration of the device (including guest devices in a cascade) in the software and then make the desired changes.

If you only use functions that are also available with function package SP1 or SP2, you can use the extension module for software configuration and remove it again after transferring the configuration. This allows you, for example, to change the default settings for muting.

Further topics

- "System plug", page 19
- "Extension module", page 20

7.2 Security

DANGER

Hazard due to lack of effectiveness of the protective device

Changes to the configuration and the use of service functions by unauthorized persons can result in the dangerous state not being ended or not being ended in time.

→ Ensure that unauthorized persons cannot gain access to the devices via Safety Designer or the SICK Safety Assistant app.

→ Ensure that unauthorized persons cannot make any changes to the system and its configuration, e.g., via system plugs.

NOTICE

When you log into a device, the configuration software stores the password so that you do not need to re-enter it for other configuration steps.

If you do not change any other settings in the login dialog, the password is deleted as soon as you exit the configuration software, or log out in the main window or Device window.

If you enable the **Temporarily store password for login on additional devices.** function, the password will be retained even if you log out in the device window only.

If you leave the computer unattended, you must log off to prevent unwanted access to the device.

NOTICE

The computer used for configuration must be protected against unintentional interference or modification (e.g. by anti-virus software and firewall).

When using Safety Designer or the SICK Safety Assistant app, assign a unique device name to each system to prevent confusion.

During commissioning, change the default password SICKSAFE for all devices to protect them against unauthorized access. The devices in a system use the same password. When a password is changed, the password for all connected devices in the system is changed.

If devices are connected to a system for which a password has already been changed, all connected devices in the system must have been changed to the same password.

If the configuration is restored automatically, the passwords are also restored.

7.3 Factory settings

Overview

A device that has the factory settings can be configured via the system plug or via the Safety Designer (software configuration).

Table 55: Factory settings of the configurable functions

Function	Factory setting
Beam coding	Uncoded
Restart interlock	Not configured
Smart restart interlock	Not configured
External device monitoring (EDM)	Not configured
Application diagnostic output	Weak signal
Cascading	Single system
Smart presence detection	Not configured
Reduced resolution (Basic)	Not configured
Reduced resolution (Advanced)	Not configured
Protective field width	Automatic calibration of the protective field width
Transmitting power	**Depends on the sender variant:** • Sender with small scanning range: Reduced transmitting power • All other senders: Full transmitting power
Muting	Not configured
Partial muting	Not configured
Fixed and floating blanking	Not configured
Smart Box Detection	Not configured
Operating modes	Not configured
Multiple sampling	Double sampling
Inputs for safety sensors (SDI)	Not configured
IO-Link	Activated (diagnostics only)
Object pattern recognition	Not configured

Complementary information

The device must be reset to the factory settings in the following cases:

- The configuration type is changed from software configuration to configuration via system plug.
- The device was previously operated with an SP2 system plug and used functions of the SP2 function package and will now be operated with an SP1 system plug.
- One of the following functions is changed during configuration via system plug:
  - External device monitoring (EDM)
  - Restart interlock
  - Cascading
- The device is to be used as a replacement device (device replacement).

All other functions configured via DIP switches on the device will be reset to the factory settings by setting the DIP switches to Off.

The following options are available for resetting a device to the factory settings:

- DIP switch on system plug
- Safety Designer
- SICK Safety Assistant app

Resetting to factory settings has the following effects:

- The configurable functions are reset to their factory settings.
- The Maintenance and Authorized Client user groups are deactivated.
- The password for the Administrator user group is reset to the factory settings.
- The error memory is cleared.

Further topics

- "Reset to factory settings", page 189
- "Service functions of the mobile app", page 190
- "Resetting to factory settings via DIP switches", page 166

7.4 Configuration mode

If a device detects a permissible change to the configuration, the device switches to configuration mode. In configuration mode, the OSSDs are in the OFF state.

Table 56: Configuration mode

	Sender	Receiver
Configuration mode is active	• When resetting the sender to the factory settings • A permissible change of cascading was discovered during switch-on • After replacing the device (sender), the configuration was restored and transferred to the replacement device.	• When resetting the receiver to the factory settings • A permissible change of cascading was discovered during switch-on • A permissible change to the external device monitoring configuration has been discovered during switch-on • The reset pushbutton was pressed in order to configure the restart interlock following switch-on • After replacing the device (receiver or extension module[1]), the configuration was restored and transferred to the replacement device.
Display of the configuration mode	• Field indicator: Green • STATE LED: Red	• Field indicator: Green • OSSD LED: Red

○ LED off. LED flashes. ● LED illuminates.

1 Configuration mode cannot be displayed on the extension module. The receiver therefore displays the configuration mode when the configuration on the extension module has been restored.

If you have configured the device via system plugs, you can make further changes to the configuration during configuration mode:

- Configuring the restart interlock

Quit configuration mode

→ Briefly interrupt the voltage supply, then switch it back on.
→ When all devices are in configuration mode: Start the application (via Safety Designer or the SICK Safety Assistant app).[12)].
→ Perform a device restart (via Safety Designer or the SICK Safety Assistant app).[12)].

7.5 Configuration via system plug

Overview

The configuration via the system plug is carried out on the DIP switches of the SP1 or SP2 system plug.

When configuring via the system plug, no software configuration must be saved. If necessary, the system must be reset to the factory settings.

When using the extension module for diagnostics, no other software configuration may be stored in the configuration memory of the extension module. If necessary, the extension module must be reset to the factory settings.

For cascades: The configuration of the host devices is applied to the guest devices. The DIP switches of the guest devices are ignored.

In addition, the following functions can be configured automatically:

- Restart interlock
- External device monitoring (EDM)
- Cascading
- Application diagnostic output (ADO)

After changing the automatic configuration, the device switches to configuration mode. Configuration changes to the DIP switches (e.g., beam coding), on the other hand, are applied directly.

Functions and their configuration type

Table 57: Functions and their configuration type

Function	Configuration type
Muting	DIP switch
Partial muting	
Manual adjustment of the protective field width	
Reduced resolution (Basic)	
Smart presence detection	
Beam coding	
Smart Box Detection	
Reset to factory settings	
Restart interlock	Automatic configuration
External device monitoring (EDM)	
Cascading	
Application diagnostic output	

12) A connection between the sender and receiver is required to restart the device or to start the sender application

DIP switch on system plug

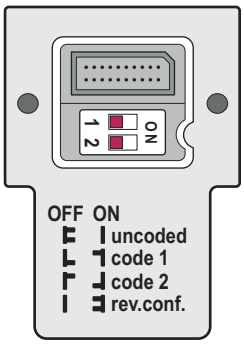

Figure 63: SP1 system plug with 2 DIP switches

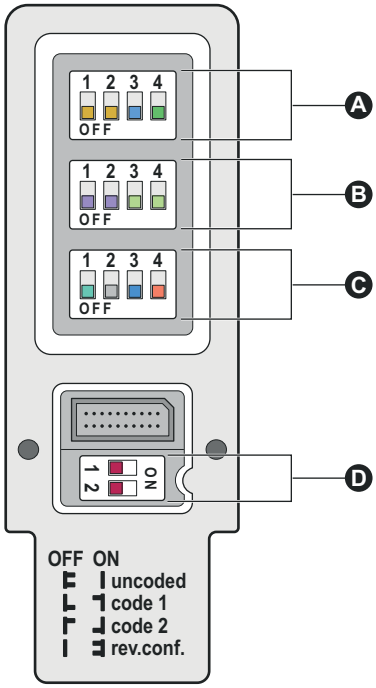

Figure 64: SP2 system plug with 14 DIP switches

Table 58: Overview of DIP switches

Row	DIP switch	Function
A [1]	1, 2, 3, 4	Muting, see "Configuring muting", page 155
B [1]	1, 2	Scanning range adjustment, see "Configuring the protective field width", page 157
	3, 4	Reduced resolution (Basic), see "Configuring reduced resolution (Basic)", page 158
C [1]	1	Smart presence detection, see "Configuring smart presence detection", page 159
	2	Not assigned
	3	Smart Box Detection [2], see "Configuring Smart Box Detection", page 160
	4	Parity, see "Checking the parity", page 161
D	1, 2	• Beam coding, see "Configuring beam coding", page 153 • Reset to factory settings, see "Resetting to factory settings via DIP switches", page 166

1) Only applies to SP2 system plug.

2) On receivers with functional scope V 1.0.0, DIP switch 3 is not assigned.

Configuration information

→ When using an SP2 system plug, leave all unused DIP switches in the OFF state. Otherwise a configuration fault is output.

→ Check the parity using the SP2 system plug after setting the DIP switches. The sum of the DIP switches of rows A, B and C set to On must be even. In case of an uneven sum, change the setting of DIP switch 4 (row C).

→ Securely close the protective cover for the DIP switches, which is attached to the SP2 system plug.

→ Then ensure the correct functioning of the device.

Complementary information

If the device uses functions of an SP1 system plug and then an SP2 system plug is connected, the device retains the settings and continues to operate as with the previous system plug.

7.5.1 Possible combinations of functions on SP2 system plug

Table 59: Possible combinations of functions on SP2 system plug

Function	Beam coding	Restart interlock (In2)	Restart interlock (In3)	EDM (In1)	EDM (In4)	Cascading	Smart presence detection	Muting (In1, In2)	Muting (In2, In4)	Partial muting	Smart Box Detection	Reduced resolution (Basic)	Manual adjustment of the protective field width
Beam coding	–	✓	✓	✓	✓	✓	✓	✓	✓	✓	✓	✓	✓
Restart interlock at extension connection (In2)	✓	–	–	✓	✓	✓	✓	–	–	✓	✓	✓	✓
Restart interlock at system connection (In3)	✓	–	–	✓	✓	✓	✓	✓	✓	✓	✓	✓	✓
External device monitoring (EDM) at extension connection (In1)	✓	✓	✓	–	–	✓	✓	–	–	✓	✓	✓	✓
External device monitoring (EDM) at the system connection (In4)	✓	✓	✓	–	–	✓	✓	✓	–	✓	✓	✓	✓
Cascading	✓	✓	✓	✓	✓	–	✓	–	–	–	–	✓	✓
Smart presence detection	✓	✓	✓	✓	✓	✓	–	–	–	–	–	✓	✓
Muting at the extension connection (In1, In2)	✓	–	✓	–	✓	–	–	–	–	✓	–	✓	✓
Muting at extension connection In2 and at system connection In4	✓	–	✓	–	–	–	–	–	–	✓	–	✓	✓
Partial muting	✓	✓	✓	✓	✓	–	–	✓	✓	–	–	–	✓
Smart Box Detection	✓	✓	✓	✓	✓	–	–	–	–	–	–	✓	✓
Reduced resolution (Basic)	✓	✓	✓	✓	✓	✓	✓	✓	✓	–	✓	–	✓
Manual adjustment of the protective field width	✓	✓	✓	✓	✓	✓	✓	✓	✓	✓	✓	✓	–

✓ Functions can be combined with each other.

-) Functions cannot be combined with each other.

7.5.2 Configuring beam coding

Overview

The beam coding “uncoded” allows for particularly short response times.

To protect against interference from systems in close proximity to each other, code 1 and code 2 must be used.

The beam coding must be the same for the sender and receiver.

In a cascade, the beam coding is set on the sender and receiver of the host device and applied to all guest devices. Deviating settings for the guest devices are ignored.

Configuring beam coding

The beam coding is configured using 2 DIP switches. The DIP switches are located on the inside of the system plug.

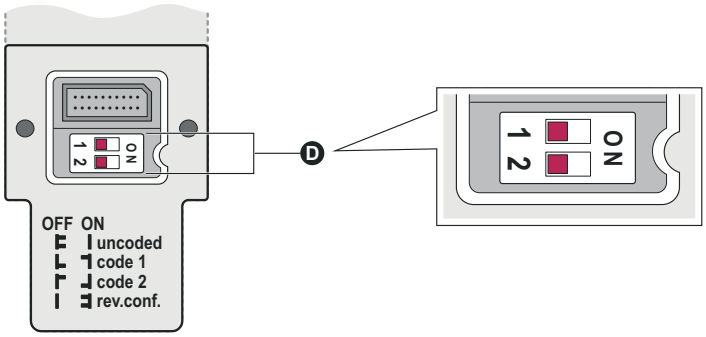

Figure 65: Configuring beam coding

Table 60: DIP switches and beam coding

DIP switch 1 (row D)	DIP switch 2 (row D)	Function
Off	Off	Uncoded (fast response time, factory setting)
On	Off	Code 1 (protection against interference from systems in close proximity to each other)
Off	On	Code 2 (protection against interference with systems in close proximity to each other)
On	On	Reset to factory settings

The beam coding is indicated when the product is switched on:

- Uncoded: the field indicator does not flash yellow
- Code 1: the field indicator flashes yellow once
- Code 2: the field indicator flashes yellow twice
- Field indicator lights up yellow for 3 seconds: software configuration is active. The beam coding cannot be determined from the DIP switch positions.

Complementary information

You can also change the beam coding later. You do not need to reset the product to the factory settings to do this.

Beam coding does not have to be taken into account for the parity test.

Further topics

- "Protection against interference from systems in close proximity to each other", page 35
- "Factory settings", page 149

7.5.3 Configuring muting

Overview

Muting is configured via the DIP switches 1 ... 4 (row A) on the receiver of a single system.

Depending on arrangement of the muting sensors, cross-muting or exit monitoring can be configured and the ESPE protection can be temporarily bypassed. In combination with partial muting, the safety can be increased by having the topmost beam (far from system plug) remain active during a valid muting condition.

In addition, a muting signal can be routed from the extension connection of the receiver to the 8-pin system connection. EDM is then not possible on either the system or the extension connection.

Important information

NOTE
Muting can only be configured on the receiver of a single system.

Prerequisites

- SP2 system plug

Configuring muting

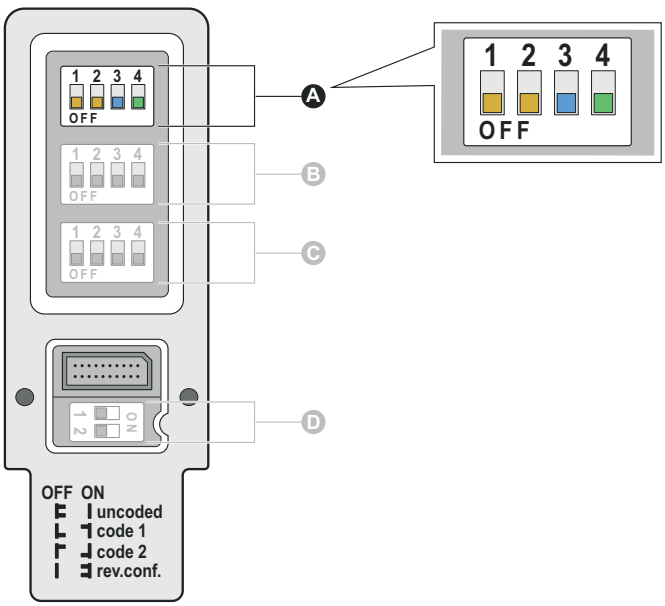

Figure 66: DIP switch for muting on the SP2 system plug

Table 61: DIP switch and muting

DIP switch 1 (row A)	DIP switch 2 (row A)	DIP switch 3 (row A)	DIP switch 4 (row A)	Function
Off	Off	Off	Off	Muting deactivated (delivery condition)
Off	On	Off	Off	Cross muting
Off	On	Off	On	Cross-muting with muting signal 1 on system connection In4 and muting signal 2 on extension connection In2

DIP switch 1 (row A)	DIP switch 2 (row A)	DIP switch 3 (row A)	DIP switch 4 (row A)	Function
Off	On	On	Off	Partial muting based on cross muting
Off	On	On	On	Partial muting based on cross muting with muting signal 1 on the In4 system connection and muting signal 2 on the In2 extension connection
On	Off	Off	Off	Exit monitoring
On	Off	Off	On	Exit monitoring with muting signal 1 on system connection In4 and muting signal 2 on extension connection In2
On	Off	On	Off	Partial muting based on exit monitoring
On	Off	On	On	Partial muting based on exit monitoring with muting signal 1 on the In4 system connection and muting signal 2 on the In2 extension connection

The following muting parameters are fixed by configuring muting on the SP2 system plug.

Table 62: Settings depending on the muting variant

Muting parameters	Values for exit monitoring	Values for cross muting
Override	Active	Active
Successive overrides	5	5
Sensor gap monitoring (muting signal)	0.5 s	0.5 s
Sensor gap monitoring (ESPE)	0.5 s	-
Muting end delay	0.2 s	-
Muting hold time	4 s	-
Muting end condition	ESPE	Muting signals
Concurrence monitoring	24 h	24 h
Total muting time	24 h	24 h

Note on configuration

→ Check the parity after setting the DIP switch, see "Checking the parity", page 161.

Complementary information

The following applies to cross-muting:

- Override is active. The number of consecutive override statuses is limited to 5.
- Concurrence monitoring is configured.
- A total muting time is active.
- Cross muting is ended if one of the muting sensors remains clear for longer than 0.5 s, i.e., the sensor gap monitoring (muting sensor) has been exceeded.

The following is true for exit monitoring:

- Override is active. The number of consecutive override statuses is limited to 5.
- Concurrence monitoring is configured.
- A total muting time is active.
- The Muting end by ESPE function is active.

- Exit monitoring is ended when the ESPE is clear for longer than 0.5 s and a muting end delay of 0.2 s has elapsed.
- When a muting sensor becomes clear, the sensor gap monitoring will expire, i.e., a muting sensor may not be clear longer than 0.5 s.
- If the sensor gap monitoring (muting sensor) of 0.5 s has been exceeded, muting ends after a muting hold time of 4 s.

Further topics

- "Muting", page 42

7.5.4 Configuring the protective field width

Important information

NOTE
The protective field width is only configured on the receiver of a single or host system.

Prerequisites

- SP2 system plug

Configuring the protective field width

The protective field width of the safety light curtain is configured using DIP switches 1 and 2 (row B) on the system plug of the receiver.

The protective field width configuration is applied to all guest devices in a cascade.

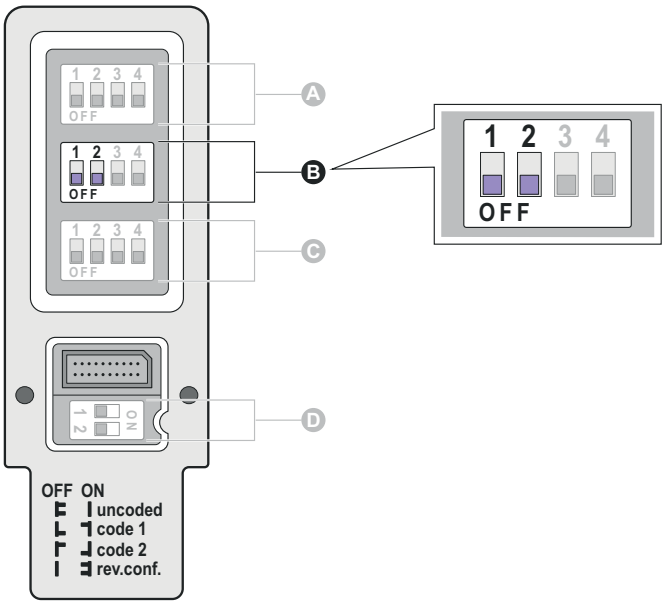

Figure 67: DIP switch for the protective field widths on the SP2 system plug

Table 63: DIP switches and scanning range

DIP switch 1 (row B)	DIP switch 2 (row B)	Function
Off	Off	Automatic calibration of the protective field width (delivery condition)
Off	On	Manual protective field width (small range)
On	Off	Manual protective field width (medium range)

DIP switch 1 (row B)	DIP switch 2 (row B)	Function
On	On	Manual protective field width (large range)

Note on configuration

→ Check the parity after setting the DIP switch, see "Checking the parity", page 161.

Further topics

- "Scanning range and protective field width", page 28

7.5.5 Configuring reduced resolution (Basic)

Important information

NOTE
Reduced resolution is only configured on the receiver of a single or host system.

Prerequisites

- SP2 system plug

Configuring reduced resolution (Basic)

Reduced resolution is configured using DIP switches 3 and 4 (row B) on the system plug of the receiver.

The reduced resolution configuration is applied to all guest devices in a cascade.

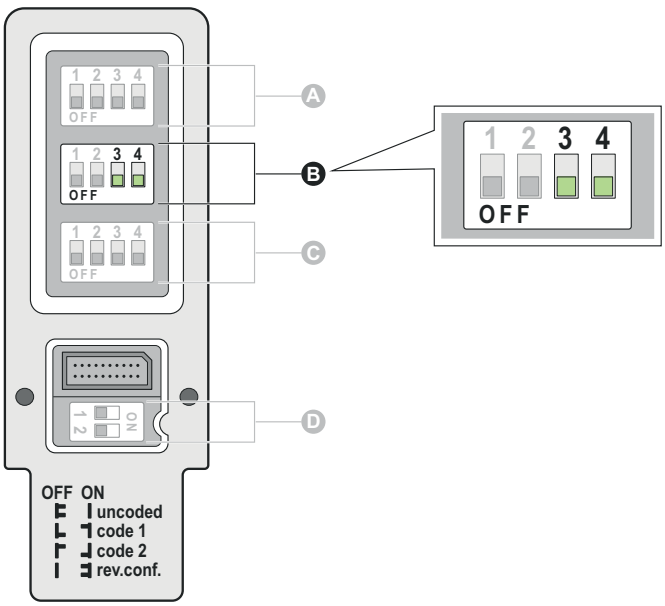

Figure 68: DIP switch for reduced resolution on SP2 system plug

Table 64: DIP switches and reduced resolution

DIP switch 3 (row B)	DIP switch 4 (row B)	Function
Off	Off	Reduced resolution deactivated (factory setting)
Off	On	1 beam
On	Off	2 beams
On	On	Not allowed

Note on configuration

→ Check the parity after setting the DIP switch, see "Checking the parity", page 161.

Further topics

- "Reduced resolution", page 39

7.5.6 Configuring smart presence detection

Important information

NOTE
Smart presence detection is only configured on the receiver of a host system.

Prerequisites

- SP2 system plug
- Cascade

Configuring smart presence detection

Smart presence detection is configured using DIP switch 1 (row C) on the system plug of the receiver.

The smart presence detection configuration applied to all guest devices in a cascade.

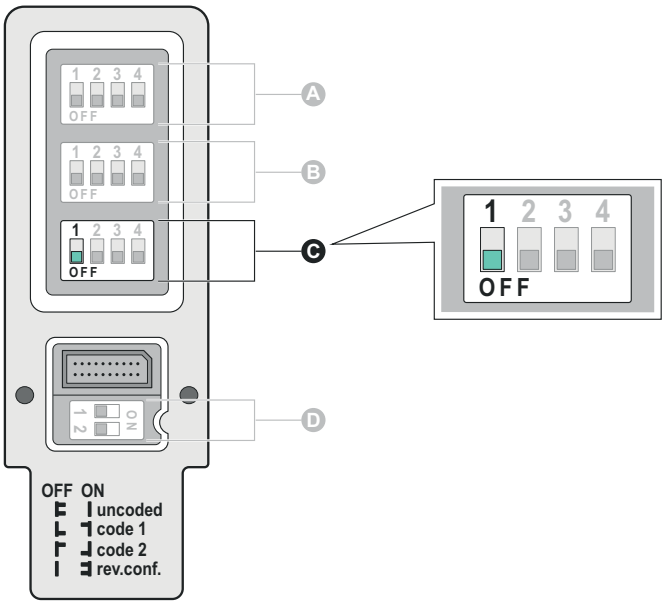

Figure 69: DIP switch for smart presence detection on SP2 system plug

Table 65: DIP switch and smart presence detection

DIP switch 1 (row C)	Function
Off	Smart presence detection deactivated (delivery condition)
On	Smart presence detection active

Note on configuration

→ Check the parity after setting the DIP switch, see "Checking the parity", page 161.

Further topics

- "Smart presence detection", page 119

7.5.7 Configuring Smart Box Detection

Overview

Smart Box Detection is configured via DIP switch 3 (row C) on the receiver of a single system.

Important information

NOTE
Smart Box Detection can only be configured on the receiver of a single system.

Prerequisites

- SP2 system plug
- Single device with a resolution of 14 mm

Configuring Smart Box Detection

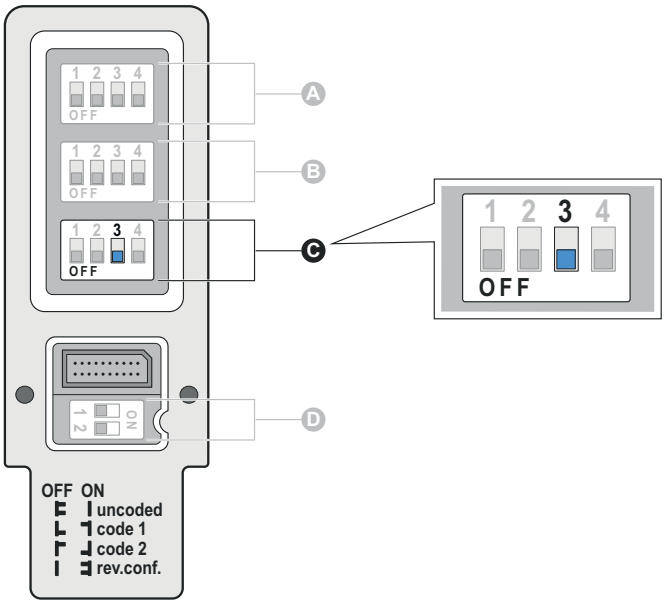

Figure 70: DIP switch for Smart Box Detection on SP2 system plug

Table 66: DIP switch and Smart Box Detection

DIP switch 3 (row C)	Function
Off	Smart Box Detection deactivated (delivery state)
On	Smart Box Detection active

The following Smart Box Detection parameters are fixed when Smart Box Detection is configured on the SP2 system plug:

Table 67: Smart Box Detection parameter settings

Smart Box Detection parameters	Values
Smart Box Detection Override	Active
Time until release of "Smart Box Detection Override required"	3 s

Smart Box Detection parameters	Values
Consecutive overrides	5
Minimum object height	134 mm
Maximum object height	(number of beams - 4) * 10 mm
Exit delay after object entry	0 ms
Total time for Smart Box Detection	24 h

Note on configuration

→ Check the parity after setting the DIP switch, see "Checking the parity", page 161.

Further topics

- "Smart Box Detection", page 61

7.5.8 Checking the parity

The parity must be checked after setting the DIP switches. The parity specifies whether the sum of the DIP switches set to On is even or uneven.

Parity is only calculated for the DIP switches of rows A, B and C. DIP switches 1 and 2 of row D are not included.

The parity is set using DIP switch 4 (row C).

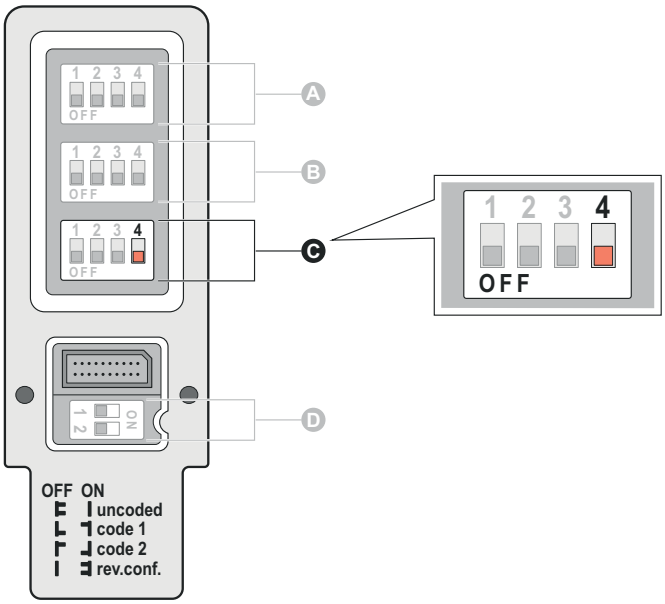

Figure 71: DIP switch for parity on SP2 system plug

Prerequisites

- SP2 system plug

Procedure

→ Add the DIP switches of rows A, B and C that are set to On.
  - If the sum of the DIP switches is even, keep the setting of DIP switch 4.
  - If the sum of the DIP switches is uneven, change the setting of DIP switch 4.

Example

Partial muting based on cross muting and beam coding (code 1) was configured on one device. DIP switch 4 is in the OFF state.

→ Sum of the DIP switches (rows A ... C) that are set to ON = 2.
DIP switches 1 and 2 (row D) for the beam coding are not included.
✔ The sum of the DIP switch is even.
→ The setting of DIP switch 4 (row C) stays in the OFF state.

7.5.9 Configuring the restart interlock

Prerequisites

- A reset pushbutton is connected
- The device is not in the "Override" or "Override required" status

Procedure

NOTE
Skip the first and second steps if the device is already in configuration mode.

1. Disconnect the device from the voltage supply.
2. Switch on the voltage supply, then continue with the next step within 30 s.
If more than 30 s elapses, start with step 1 again.
3. Press the reset pushbutton for between 1 and 3 s, then release it.
If the reset pushbutton is pressed for more than 3 s, start with step 1 again.

✔ The device is in configuration mode, the field indicator flashes green.
✔ Diagnostic LED 4 flashes white and signals that the restart interlock has been configured.
✔ The restart interlock is configured. The reset pushbutton must remain at the connection to which it was connected during configuration.

4. When using the device in a cascade, wait until all receivers concerned indicate the correct cascade configuration. In a cascade, diagnostic LED 2 flashes.
5. Disconnect the device from the voltage supply.

✔ The device can now be put into operation.

To deactivate the restart interlock, reset the receiver to the factory settings.

Complementary information

In the factory settings, restart interlock is deactivated.

If muting is configured, the extension connection is used to connect the muting sensors and a common pushbutton must be used for reset and override. The button must be connected to the 8-pin system connection.

When the restart interlock is configured, the application diagnostic output located on the same plug connector as the reset pushbutton signals when the reset pushbutton needs to be pressed. The application diagnostic output signals “reset required” and periodically switches between the HIGH and LOW state so a connected suitable lamp flashes.

If you connect a device with factory settings in a cascade with a device for which a restart interlock is configured, the unconfigured device adopts the configuration of the restart interlock from the configured device.

Further topics

- "Factory settings", page 149
- "Restart interlock", page 105

7.5.10 Configuring external device monitoring (EDM)

Prerequisites

- The external device monitoring can only be configured if the wiring has been carried out correctly.

Procedure

1. Disconnect the device from the voltage supply.
2. Make sure that the wiring has been performed correctly and that the contactor has dropped out so that 24 V is present at the EDM input when the device is switched on.
3. Switch on the voltage supply.

✔ The device is in configuration mode, the field indicator flashes green.
✔ Diagnostic LED 1 flashes white and signals that the external device monitoring has been configured.
✔ External device monitoring is active. The wiring must remain at the connection to which it was connected during configuration.

4. If necessary: to configure the restart interlock, press the reset pushbutton for between 1 and 3 s, then release it. If diagnostic LED 4 flashes white, the restart interlock has been configured.
5. When using the device in a cascade, wait until all receivers concerned indicate the correct cascade configuration. In a cascade, diagnostic LED 2 flashes.
6. Disconnect the device from the voltage supply.

✔ The device can now be put into operation.

To deactivate the external device monitoring, reset the receiver to the factory settings.

Complementary information

External device monitoring is deactivated in the factory settings.

Further topics

- "External device monitoring (EDM)", page 109
- "Factory settings", page 149

7.5.11 Configuring application diagnostic output

Overview

The application diagnostic outputs are configured automatically:

The following signals can be output over the application diagnostic output:

- Reset required
- Weak signal
- Ignored object
- Muting status
- Override required
- Valid object for Smart Box Detection

A signal can be output on both the system and extension connections.

Table 68: Output signals on the system connection and extension connection

Configured function	Output signal on the application diagnostic output of the system connection	Output signal on the application diagnostic output of the extension connection
Factory settings	Weak signal [1]	Weak signal [1]
Reduced resolution	Ignored object [2]	Weak signal [1]

Configured function	Output signal on the application diagnostic output of the system connection	Output signal on the application diagnostic output of the extension connection
Restart interlock with reset pushbutton on the system connection	Reset required	Weak signal [1]
Restart interlock with reset pushbutton on the extension connection	Weak signal [1]	Reset required
Restart interlock with reset pushbutton on the extension connection and reduced resolution	Ignored object [2]	Reset required
Muting on In1 and In2	Override required	Muting status or override required
Muting on In2 and In4	Muting status or override required	Muting status or override required
Muting on In1 and In2 and restart interlock with reset pushbutton on the system connection	Reset required or override required	Muting status or reset required or override required
Muting on In2 and In4 and restart interlock with reset pushbutton on the system connection	Muting status or reset required or override required	Muting status or reset required or override required
Smart Box Detection	Override required	Valid object required for Smart Box Detection or Override
Smart Box Detection and restart interlock with reset pushbutton on the system connection	Reset required or override required	Valid object for Smart Box Detection or Reset required or Override required
Smart Box Detection and restart interlock with reset pushbutton on the extension connection	Valid object for Smart Box Detection or Reset required or Override required	Reset required

1) A weak signal is only signaled if no other output signal is configured on the respective application diagnostic output.

2) An ignored object is only signaled if neither a restart interlock on the system connection nor muting are configured.

Further topics

- "Application diagnostic output", page 110
- "Output signals", page 111

7.5.12 Configuring cascading

Overview

You can use cascading to connect up to 3 safety light curtains, e.g., to provide presence detection. The connected devices act like a long safety light curtain. Only one device, the host, is connected to the control cabinet. The second device, guest 1, is connected to the host. The third device, guest 2, is connected to guest 1.

Configuring cascading

No more than 3 systems can be connected in a cascade.

You can connect devices with factory settings. The devices recognize automatically that they are part of a cascade.

Devices that are already configured and are to be connected in a cascade must be reset to the factory settings.

Each device detects the number of devices in the cascade when it is switched on. During configuration, the device stores this information in the configuration memory.

The information stored about the cascade is used to identify inadvertent or intentional changes that could lead to a danger:

- If fewer devices are detected in the cascade when it is switched on than were stored in the configuration, every device in the cascade switches to the locking status
- If more devices are detected in the cascade when it is switched on than were stored in the configuration, every device in the cascade updates its configuration memory to the new value

Further topics

- "Cascading", page 118
- "Connecting preconfigured devices in an existing cascade", page 166

7.5.12.1 Cascading new devices

Procedure

1. Install and wire the devices.
2. Set the DIP switches on the receiver of the host system.
3. Switch on the voltage supply.
✔ The devices are in configuration mode, the field indicator flashes green.
4. Wait until all receivers indicate the correct cascade configuration. In a cascade, diagnostic LED 2 flashes.
5. Wait approx. 3 s longer.
6. Receiver: to configure the restart interlock, press the reset pushbutton for between 1 and 3 s, then release it. Diagnostic LED 4 flashes.
7. Disconnect the devices from the voltage supply.
✔ The cascade can now be put into operation.

Further topics

- "Configuring beam coding", page 153

7.5.12.2 Connecting a new device in an existing cascade

Overview

If you use a device with factory settings to extend a cascade or to replace a (defective) device in a cascade, the device with factory settings adopts the configuration for the restart interlock and external device monitoring from the existing devices.

Procedure

1. Install and wire the device.
2. If necessary, set the DIP switches on the receiver of the host system.
3. Switch on the voltage supply.
✔ The device is in configuration mode, the field indicator flashes green.
4. If the restart interlock or external device monitoring was configured for at least one existing device, the configuration is adopted.
5. Wait until all receivers indicate the correct cascade configuration. In a cascade, diagnostic LED 2 flashes.

6. Wait approx. 3 s longer.
7. Disconnect the device from the voltage supply.

✔ The device can now be put into operation.

Further topics

- "Resetting to factory settings via DIP switches", page 166
- "Automatic restoration of the configuration when a device is replaced", page 191
- "Configuring beam coding", page 153

7.5.12.3 Connecting preconfigured devices in an existing cascade

If you use a device that may already have been configured to extend a cascade or to replace a (defective) device in a cascade, reset the device to the factory settings first.

Further topics

- "Resetting to factory settings via DIP switches", page 166
- "Connecting a new device in an existing cascade", page 165
- "Configuring beam coding", page 153

7.5.13 Resetting to factory settings via DIP switches

Overview

The sender and receiver can be reset to the factory settings independently of each other via their DIP switches.

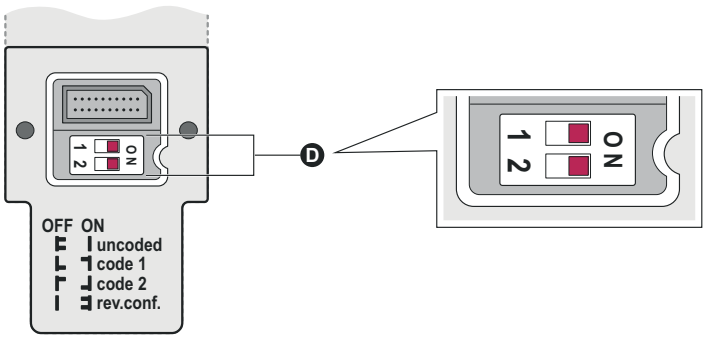

Figure 72: Reset to factory settings

Procedure

1. Disconnect the device from the voltage supply.
2. Disconnect the device from all connected devices.
3. To reset the device to factory settings, set DIP switches 1 and 2 (row D) to ON, see figure 72.
4. Switch on the voltage supply and disconnect it again within 10 s. [13] During this time, the field indicator flashes alternately yellow and green.
5. Set DIP switches 1 and 2 (row D) to Off.
6. Switch on the voltage supply.

✔ The field indicator and the integrated signal lamp on the receiver (optional) flash green.

✔ Sender: the STATE LED lights up red.

✔ Receiver: the OSSD LED lights up red.

✔ The device is reset to the factory settings.

[13] If the supply voltage is present for longer than 10 s, the safety light curtain changes to the locking status. Start again from step 1.

✔ If the devices are connected in a cascade, the cascading is reconfigured.
✔ If there is a 24 V voltage present at the EDM input, the EDM is reactivated.
7. Disconnect the device from the voltage supply.

Complementary information

In a cascade, only the host device needs to be reset. The guest devices take on those settings.

If the sender and receiver are connected to each other, only the receiver of the host device needs to be reset. The sender of the host device and all other guest devices take on those settings.

A connected extension module is not reset when the device is reset to factory settings via the DIP switches. If the extension module contains a configuration, these settings and the passwords of the extension module are retained after a system restart and are applied again.

Further topics

- "Factory settings", page 149

7.6 Configuration via Safety Designer

Overview

The ESPE is configured using the Safety Designer configuration software.

The following conditions apply to configuration via Safety Designer:

- For operation with a software configuration, all DIP switches on the single device or host in a cascade must be set to Off. The DIP switches of the guest devices in a cascade are ignored.
- After a software configuration has been transferred to a device, the automatic configuration of functions via a system plug is deactivated. If you add another guest to a cascade, for example, you must also configure that guest in Safety Designer.

Device selection in Safety Designer

Different devices and systems can be configured in Safety Designer via the device catalog.

The "**deTec/deTem system**" device is used to configure the ESPE.

You do not configure individual devices, but rather the entire system consisting of all devices of the ESPE and the extension module.

7.6.1 Safety Designer configuration software

For information on the Safety Designer, see the operating instructions for the Safety Designer item no. 8018178.

7.6.1.1 Device window

The device window contains all device-specific settings, data and functions for the selected device (deTec/deTem system). The device window has a similar user interface to the main window of Safety Designer.

You can switch between the different areas via the main navigation menu:

- **Overview**: Here you can check the most important information as well as the measurement data and the current status of the system (see "Overview", page 171).
- **Configuration**: Here you can configure the system on various sub-pages (see "Configuring the system", page 172).

- **Report**: Here you can display the project planned configuration (see "Report", page 188).
- **Service**: Here you can restart the devices of the system, reset to the factory settings, activate the laser alignment aid, or manage the user passwords (see "Service", page 188).
- **Diagnostics**: Here you can display the messages from the devices of the system, view the status of the beams, record data, or view stored recordings (see "Diagnostics using Safety Designer", page 225).

7.6.1.2 Working with configurations

Overview

A configuration is the compilation of all parameters and values that you can set for a system (single system or a cascade). The configuration is saved on the computer as a configuration file or transferred to the devices of the system.

You always use Safety Designer to create and change a configuration. You can configure a system online or offline.

The user groups activated for a system and their passwords are not part of the configuration and are not applied when a configuration is transferred.

Prerequisites

- There is a USB connection to the extension module.
- Senders/receivers have at least the functional scope V 1.1.0/1.2.0.
- Receiver and sender (optional) are connected to the extension module.

Identifying the device

Make that the system can be clearly identified so that configuration changes or service functions are always carried out on the correct system. You should therefore assign a unique device name to the system.

Before configuration changes or service functions, use the **Identify the device** function in the toolbar of the device window to identify the connected devices.

The FIELD LED of the connected senders and receivers and the STATE LED of the extension module then flash red and green alternately.

Online configuration

To configure a system online, first connect the extension module to your computer via USB and read the current configuration of the system with its devices and properties. The extension module and all connected devices of the ESPE must remain connected during the process.

Then change the configuration and transfer the changed configuration back to the system.

Offline configuration

To configure one or more systems offline, create a “Project device” in Safety Designer without linking it to a physical device.

You can then configure the project planned device in Safety Designer. To do so, you need to manually create and define the properties of all devices that are part of the system, and save the configuration on the computer. You can transfer the configuration to a system at a later time.

Verified configurations

To use a configuration on a device for security functions, you need to perform a one-off verification of the configuration after transferring it.

When you save a project, information is saved for each device as to whether the configuration is verified. When you open a project file, each device tile and the Overview dialog of the device window show whether the configuration is verified.

You can transfer a verified configuration to the same or an identical device again.

Configuration memory in the system

The configuration is saved in the following devices:

- Extension module
- Receiver of the system

If the configuration includes a sender configuration, the sender configuration is also saved in the senders of the system. The sender configuration is also part of the overall configuration that is saved in the extension module and in the receiver.

Configuration information

→ Check the changed configuration in Safety Designer (**Report** page) before transferring the configuration.
→ Then ensure the correct functioning of the device.

7.6.1.3 Reading configuration

Overview

You can read out the configuration of a system and save it in Safety Designer. You can then edit the configuration or transfer it to other systems.

Procedure

1. Connect the extension module to the computer via USB.
2. Open the connected system in the device window.
3. Ensure that the desired system is connected, click on **Identify the device** in the toolbar.
✔ The FIELD LED of the connected senders and receivers and the STATE LED of the extension module flash red and green alternately.
4. In the main navigation pane, click on **Configuration**.
✔ The **Configuration** menu opens. The different pages within the configuration are displayed in the **Navigation** area.
5. In the navigation area, click on **Read out**.
✔ The **Read out** page opens. On this page, you will find the device being configured in Safety Designer on the left, and the connected physical device on the right. The checksums of the two devices indicate whether the configurations differ.
6. Click on **Read from device**.
✔ The transfer process is displayed in Safety Designer. Safety Designer will notify you as soon as the transfer process is complete.

7.6.1.4 Transferring a configuration

Overview

Once you have completed the configuration in Safety Designer, transfer the configuration to the connected system.

During configuration, you can compare the values that are configured for the system in the project with the values that are saved in the system.

The compatibility of the configuration is checked during transfer. An existing configuration on the system is overwritten.

Procedure

1. Connect the extension module to the computer via USB.
2. Open the connected system in the device window.
3. Ensure that the desired system is connected, click on **Identify the device** in the toolbar.
✔ The STATE LED (extension module) and the field indicator (receiver, sender) of the devices of the system flash red and green alternately.
4. In the main navigation pane, click on **Configuration**.
✔ The **Configuration** menu opens. The different pages within the configuration are displayed in the **Navigation** area.
5. Check the configuration thoroughly.
6. In the navigation area, click on **Transfer**.
✔ The **Transfer** page opens. On this page, you will find the device being configured in Safety Designer on the left, and the connected physical device on the right. The checksums of the two devices indicate whether the configurations differ.
7. Click on **Transfer to device**.
✔ The transfer process is displayed in Safety Designer. Safety Designer will notify you as soon as the transfer process is complete.
✔ If the configuration has not yet been verified, Safety Designer displays a verification report.

Further topics

- "Verifying configuration", page 170

7.6.1.5 Verifying configuration

Overview

By verifying the configuration, you can confirm that the configuration complies with the planned safety function and fulfills the requirements in the risk assessment.

During verification, Safety Designer reads back the configuration transferred to the device. It compares the configuration with the configuration saved in Safety Designer. If both configurations are identical, Safety Designer displays the verification report. If the user confirms that this is correct, the system is considered to be verified.

Important information

DANGER
Hazard due to lack of effectiveness of the protective device

Errors can occur when transferring the configuration to the device, e.g., due to environmental influences or faulty cables. The verification report always contains the exact settings stored in the device.

→ Check the verification report carefully before confirming.

Prerequisites

- The configuration corresponds to the planned safety function and meets the requirements of the risk assessment.
- The configuration has just been transferred to the system and Safety Designer displays the verification report.

Procedure

1. Thoroughly review the verification report.
   → If the verification report does not match the planned safety function, click on **Cancel**, correct the configuration, and transfer it again.
   → If the verification report matches the planned safety function, click on **OK**.

✔ Device configuration is shown as verified.

Complementary information

After successful transfer and verification of a configuration, the safety function remains stopped. You have the following options for reactivating the safety function:

- Start the safety function (via Safety Designer or the SICK Safety Assistant app)
- Perform a device restart (via Safety Designer or the SICK Safety Assistant app)
- Disconnect and reconnect the voltage supply

7.6.2 Overview

On the **Overview** alternately you will find information about your project, the extension module and current system data, if it is connected.

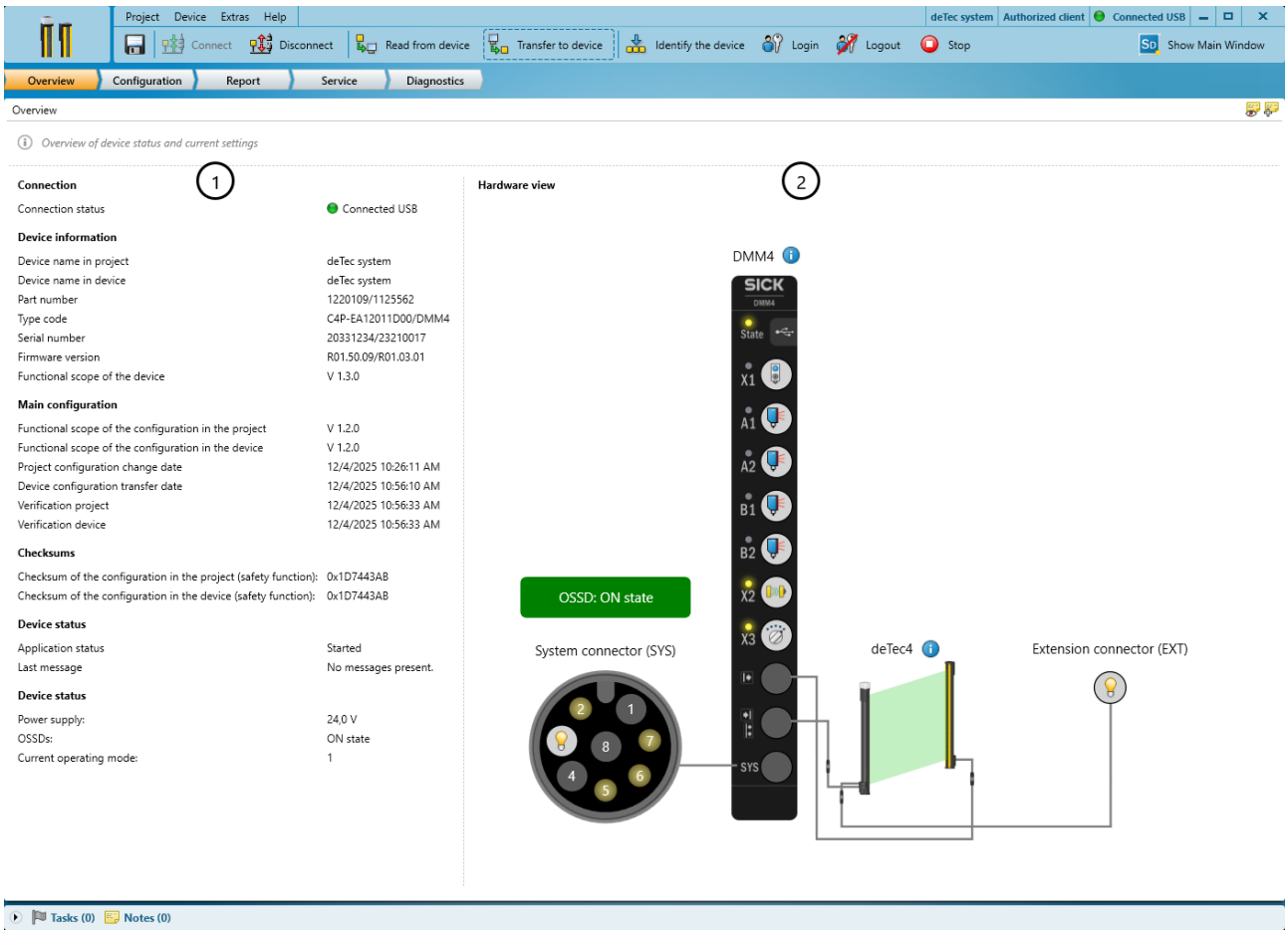

Figure 73: Example **Overview** page for a deTec4 system with extension module DMM4

① Information about the system

② Displays the individual devices of the connected system (the current firmware and additional information on the individual devices and product identification can be accessed via the info icons)

7.6.3 Configuring the system

A system includes all devices of the ESPE with connected extension module.

To configure the system, you need to select the system in your project and open it in the device window.

The system is configured on various pages in the device window. On the **Hardware configuration** page, you can view and adjust the hardware and connections of all devices. On the pages under **Feature configuration**, you can activate various functions and configure the corresponding settings.

7.6.3.1 Possible combinations of functions in Safety Designer

You can activate various functions for the device in Safety Designer.

Certain functions cannot be combined as they either require the same connections or cannot be combined conceptually. Safety Designer issues an error message if you activate functions that cannot be combined.

If you activate functions that cannot be combined, corresponding error messages are displayed in the **Tasks** area of Safety Designer.

Non-combinable functions

The following functions **cannot** be combined with each other when configuring via Safety Designer.

Table 69: Functions and their limitations

Function	Non-combinable functions
Cascade (incl. smart presence detection)	• Muting (general) • Smart Box Detection • Object pattern recognition
Automatic calibration of the protective field width	• Reduced transmitting power • Object pattern recognition • Fixed blanking incl. teach-in • Floating blanking
Reduced resolution (Basic)	• Partial muting • Reduced resolution (Advanced)
Reduced resolution (Advanced)	• Reduced resolution (Basic) • 4-signal muting • Muting (in the same operating mode) • Smart Box Detection (in the same operating mode) • Object pattern recognition • SDI
Muting incl. partial muting	• Cascade (incl. smart presence detection) • Smart Box Detection • Object pattern recognition • Teach-in for fixed blanking • Floating blanking • Reduced resolution (Advanced) (in the same operating mode) • With partial muting: ○ Reduced resolution (Basic)
Smart Box Detection	• Cascade (incl. smart presence detection) • Muting (general) • Object pattern recognition • Configurable multiple sampling • Fixed blanking incl. teach-in • Floating blanking • Reduced resolution (Advanced) (in the same operating mode) • SDI

Function	Non-combinable functions
Object pattern recognition	• Smart restart interlock • Cascade (incl. smart presence detection) • Reduced resolution (Advanced) • Muting (general) • Smart Box Detection • Configurable multiple sampling • Fixed blanking incl. teach-in • Floating blanking • SDI • Automatic calibration of the protective field width
Configurable multiple sampling	• Smart Box Detection • Object pattern recognition • Fixed blanking incl. teach-in • Floating blanking

Fixed blanking incl. teach-in	• Smart Box Detection
	• Object pattern recognition
	• Configurable multiple sampling
	• SDI
	• Automatic calibration of the protective field width
	• For teach-in for fixed blanking:
	  ○ Muting (general)
	  ○ Floating blanking (in the same operating mode)

Floating blanking	• Muting (general) • Smart Box Detection • Object pattern recognition • Configurable multiple sampling • SDI • Automatic calibration of the protective field width • Teach-in for fixed blanking (in the same operating mode)
SDI	• Reduced resolution (Advanced) • Smart Box Detection • Object pattern recognition • Teach-in for fixed blanking • Floating blanking
Smart restart interlock	• Object pattern recognition
reduced transmitting power	• Automatic calibration of the protective field width

7.6.3.2 Hardware configuration

Overview

On the **Hardware configuration** page, you can view and adjust the hardware configuration of your system.

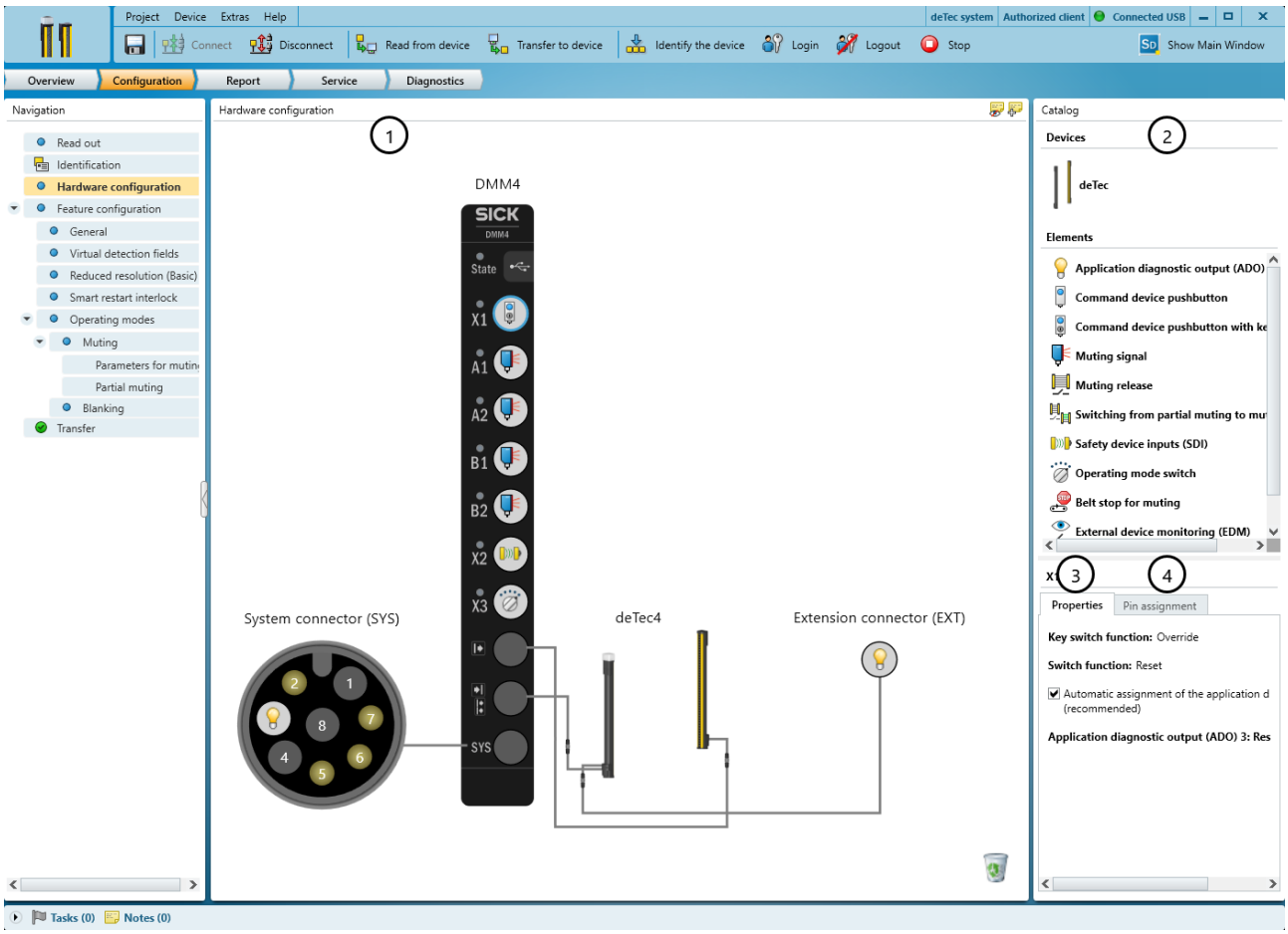

Figure 74: Example **Hardware configuration** page for a deTec4 system with extension module DMM4

① Hardware configuration: Overview of the free and assigned connections or inputs/outputs on the product

② Catalog: Overview of the available elements and devices

③ Properties: Settings for the configurable elements and devices

④ Pin assignment: Settings for manual pin assignment

Hardware configuration

In the **Hardware configuration** area, you can see the current hardware configuration of your system. All free and assigned connections or inputs/outputs of your system are displayed there. You can move already connected devices or elements to other connections using drag-and-drop. If a connection is already assigned, the new assignment overwrites the old assignment. Move a device or element to the trash can icon to remove it from the configuration.

Catalog

In the **Catalog** area, you can see the available devices and elements that you can connect to your system. If you point to a device with the mouse pointer, the possible positioning of the device in the system is highlighted. If you point to an element with the mouse pointer, the possible connections for the element on the system are highlighted. When you double-click on a device, it is automatically positioned at the standard position in the system. When you double-click on an element, it is automatically positioned on the standard connection. Devices and elements can also be set at a position using drag-and-drop.

Properties

On the **Properties** tab, you can adjust the properties of the selected element, e.g., the switching function or the assignment of application diagnostic outputs.

You can also configure settings for the individual devices (host device, guest devices, extension module), for example the protective field height or resolution of the device. Use the **Schutzfeldausrichtung** drop-down menu to specify, depending on the functions used, whether the system is mounted with a vertical protective field (default setting) or a horizontal protective field.

Pin assignment

On the tab **Pin assignment** tab, you can deactivate the automatic pin assignment and manually configure the function of the pins (inputs and outputs) on the connections.

7.6.3.2.1 Elements

Table 70: Available elements for the hardware configuration

Element	Function
Application diagnostic output (ADO)	Displays various system statuses for diagnostic purposes.
Belt stop for muting	Input for belt stop signal when muting. Stops the timers of time monitors and muting conditions if a conveyor belt stop is detected at the belt stop input.
Command device pushbutton	Input device, e.g., for reset or override (depending on the configuration).
Command device pushbutton with key switch	Input device that has **Command device pushbutton** and key switches, e.g., for reset and override or reset and teach-in for fixed blanking (depending on the configuration).
Muting release	Additional muting signal
Switching from partial muting to muting	Additional muting signal
External device monitoring (EDM)	Monitors the status of downstream contactors that are controlled by the OSSD of the product.
IO-Link	Connection for an IO-Link master. Serves as an interface for the transmission of non-safety diagnostic and status data.
Operating mode switch	Input device for selecting different operating modes, or input for signals for switching to different operating modes.
Muting signal	Input for muting signals.
Safety device inputs (SDI)	Input for connecting safety sensors.
Teach-in for fixed blanking	Input for teach-in for fixed blanking.

7.6.3.3 Configuring beam coding

Overview

The beam coding “uncoded” allows for particularly short response times. To protect against interference from systems in close proximity to each other, code 1 and code 2 must be used.

Important information

NOTE
The beam coding is set for the system and must be the same for the sender and receiver.

→ Ensure that the same beam coding is used for the sender.
→ If the sender is connected to the extension module, check that the **Also transfer configuration for sender(s)** checkbox is activated on the **General** page.

Procedure

1. In the **Navigation** area, click on **General**.
✔ The **General** page opens.
2. In the **Protective field configuration** area, select the desired coding for **Beam coding**.

Further topics

- "Protection against interference from systems in close proximity to each other", page 35
- "Using beam coding", page 36

7.6.3.4 Configuring the protective field width

Overview

By default, the protective field width is automatically measured when the device is switched on and is not changed during operation.

Alternatively, you can define a range for the manual setting of the protective field width. The protective field width can change within this range during operation.

Procedure

1. In the **Navigation** area, click on **General**.
✔ The **General** page opens.
2. In the **Protective field configuration** area, select **Manual** for **Protective field width**.
3. Select the desired range for the protective field width.

Further topics

- "Manual adjustment of the protective field width", page 29

7.6.3.5 Configuring application diagnostic output

Overview

You can output predefined output signals via the application diagnostic outputs to indicate various system statuses. You can configure up to 4 application diagnostic outputs, provided the connections are not required for other functions.

When using the following elements on the **Hardware configuration** page, the application diagnostic output is automatically assigned to the corresponding connection:

- Command device pushbutton
- Command device pushbutton with key switch

Prerequisites

- An application diagnostic output is connected.

Procedure

1. In the **Navigation** area, click on **Hardware configuration**.
✔ The **Hardware configuration** page opens.
2. Drag the **Application diagnostic output (ADO)** element to the desired connection.
3. In the **Properties** area, select the desired output signal.
✔ The application diagnostic output is assigned the selected output signal. Repeat the procedure to configure further application diagnostic outputs.

Complementary information

On the **General** page, you will find an overview of all application diagnostic outputs and the assigned signals. You can also change the signals on this page if they are not automatically specified by an element assigned on the **Hardware configuration** page. In this case, to make a change the automatic assignment must first be deactivated on the **Hardware configuration** page.

Some output signals cannot be connected to the same connection as other functions for safety reasons. In this case, the task list displays an error and you need to change the assignment of the connections.

The following combinations are not possible:

- If you use the muting release or switching between partial muting and muting functions:
  - The Muting object in protective field output signal cannot be connected to the same connection (applies to system connection, extension connection, X1 or X2).
  - The Weak signal output signal cannot be connected to the same connection (applies to X1 or X2).
  - The Ignored object output signal cannot be connected to the same connection (applies to X1 or X2).
  - The "Virtual detection field" status output signal cannot be connected to the same connection (applies to system connection, extension connection, X1 or X2).
- If you use the muting function, the following applies for the muting signal:
  - The "Virtual detection field" status output signal cannot be connected to the same connection (applies to system connection or extension connection).
- If you use the safety sensors (SDI) on connection X1:
  - The application diagnostic output at connection X1 cannot be used.

Further topics

- "Application diagnostic output", page 110
- "Output signals", page 111

7.6.3.6 Configuring the virtual detection field

Prerequisites

- An application diagnostic output is configured for each actively used virtual detection field.

Procedure

1. In the **Navigation** area, click on **Virtual detection fields**.
✔ The **Virtual detection fields** page opens.
2. When using a cascade, select under **Device** the cascade node for which a virtual detection field is to be defined.
3. Configure the desired settings under **Start beam of area** and **Area size (beams)**.

4. Optional: Repeat step 2 and step 3 for **virtual detection field 2**.
✔ You have configured virtual detection fields for use as an application diagnostic output (ADO).

Further topics

- "Configuring application diagnostic output", page 176

7.6.3.7 Configuring (smart) restart interlock

Prerequisites

- A reset pushbutton is connected.

Procedure

1. In the **Navigation** area, click on **Hardware configuration**.
✔ The **Hardware configuration** page opens.
2. Drag the **Command device pushbutton** or **Command device pushbutton with key switch** element to the connection to which the reset pushbutton is connected.
3. In the **Properties** area, select the desired switching function.
   - **Reset**: If you only use the reset pushbutton for the restart interlock.
   - **Reset/Override**: If you also use the reset pushbutton for override.

✔ You have configured the restart interlock. The application diagnostic output associated with connection has been assigned automatically. Continue with the following steps to configure the smart restart interlock.
4. In the **Navigation** area, click on **Smart restart interlock**.
✔ The **Smart restart interlock** page opens.
5. Enable the **Smart restart interlock** checkbox and set the desired number of beams.
✔ You have configured the smart restart interlock.
6. Optional: Enable the **Restrict area** checkbox to restrict the active area for the smart restart interlock.
7. Set the area using **Start beam of area** and **Area size (beams)** .
✔ You have restricted the smart restart interlock to an area in the protective field.

Further topics

- "Restart interlock", page 105

7.6.3.8 Configuring cascading

Overview

You can use cascading to connect up to 3 devices, e.g., to provide presence detection. The connected devices act like a long safety light curtain. Only one device, the host, is connected to the control cabinet. The second device, guest 1, is connected to the host. The third device, guest 2, is connected to guest 1.

Important information

NOTE
The configuration for the cascade is set for the system and must be the same for the sender and receiver.

→ Ensure that the same cascade configuration is used for the sender.
→ If the sender is connected to the extension module, check that the **Also transfer configuration for sender(s)** checkbox is activated on the **General** page.

Prerequisites

- At least two devices are connected as a cascade.

Procedure

1. In the **Navigation** area, click on **Hardware configuration**.
✔ The **Hardware configuration** page opens.
2. Drag the required number of **Devices** for the cascade into the configuration.
3. Click on each device individually and in the **Properties** area, check and if necessary adjust the values for **Protective field height** and **Resolution**.

Complementary information

Apart from the protective field height and resolution settings configured here, all other functions apply to the entire cascade.

The exception to this is functions where individual configuration of host devices and guest devices is possible (e.g., reduced resolution).

During online configuration, the hardware configuration of the devices is automatically read in and preset.

Further topics

- "Cascading", page 118
- "Configuring smart presence detection", page 179

7.6.3.9 Configuring smart presence detection

Prerequisites

- At least two devices are connected and configured as a cascade.

Procedure

1. In the **Navigation** area, click on **General**.
✔ The **General** page opens.
2. Activate the **Smart presence detection** checkbox in the **Cascade** area.

Further topics

- "Smart presence detection", page 119
- "Configuring cascading", page 178

7.6.3.10 Configuring the transmitting power

Prerequisites

- The sender and receiver are connected to each other.

Procedure

1. In the **Navigation** area, click on **General**.
✔ The **General** page opens.
2. Activate the **Also transfer configuration for sender(s)** checkbox in the **Sender configuration** area.
3. In the **Protective field configuration** area, selected the desired value for **Transmitting power**.
4. If the **Reduced** value has been selected: Make sure that the value **Manual** is selected for **Protective field width**.

Further topics

- "Transmitting power adjustment", page 38
- "Configuring the protective field width", page 176

7.6.3.11 Configuring multiple sampling

Overview

The multiple sampling specifies how often an object must be detected before the protective device responds with a protective field interruption. Double sampling is set by default.

Procedure

1. In the **Navigation** area, click on **General**.
✔ The **General** page opens.
2. In the **Multiple sampling** area, set the desired number of scans.

Further topics

- "Multiple sampling", page 82

7.6.3.12 Configuring reduced resolution (Basic)

Overview

In a cascade, you can configure different settings for host, guest 1 and guest 2.

NOTE
For functional scope V 1.3.0 and higher, the resolution can be reduced by a maximum of 28 beams for devices with a physical resolution of 14 mm. For devices with a physical resolution of 30 mm, the resolution can be reduced by a maximum of 10 beams.

Prerequisites

- For cascade: The devices are entered in the hardware configuration.

Procedure

Configuration with a DMM4:

1. In the **Navigation** area, click on **Reduced resolution (Basic)**.
✔ The **Reduced resolution** page opens. On this page, you can see the individual device or all devices in the cascade.
2. Enable the **Interruption allowed up to** checkbox for the individual device or for the host.
3. Enter the desired number of beams.
4. Optional: If using a cascade, repeat the last two steps for guest 1 and guest 2.

Configuration with a DCM4:

1. In the **Navigation** area, click on **Reduced resolution**.
2. The **Reduced resolution** page opens.
3. Activate the **Activate reduced resolution** checkbox.
4. Under **Variant of reduced resolution**, select the **Reduced resolution (Basic)** option.
5. In the **Navigation** area, click on **Parameters for reduced resolution**.
✔ The **Parameters for reduced resolution** page opens. On this page, you can see the individual device or all devices in the cascade.
6. Enable the **Interruption allowed up to** checkbox for the individual device or for the host.

7. Enter the desired number of beams.
8. Optional: If using a cascade, repeat the last two steps for guest 1 and guest 2.

Further topics

- "Reduced resolution", page 39

7.6.3.13 Configuring reduced resolution (Advanced)

Overview

In a cascade, you can configure different settings for host, guest 1 and guest 2.

Prerequisites

- Function package DCM4
- For cascade: The devices are entered in the hardware configuration.

Procedure

1. In the **Navigation** area, click on **Reduced resolution**.
✔ The **Reduced resolution** page opens. On this page you will see a tab for each device.
2. Activate the **Activate reduced resolution** checkbox.
3. Under **Variant of reduced resolution**, select the **Reduced resolution (Advanced)** option.
4. In the **Navigation** area, click on **Parameters for reduced resolution**.
✔ The **Parameters for reduced resolution** page opens.
5. On the tab of the individual device or on the **Host** tab under **Configuration**, click on **Add area**.
✔ An area for reduced resolution (Advanced) is added.
6. Under **Area 1**, configure the desired settings.
7. Optional: Repeat the last two steps. You can configure settings for up to 4 areas.
8. If required: Enable the **Reduce multiple sampling to improve response time** checkbox to reduce the number of object detections within the areas for reduced resolution (Advanced) by 1 scan.
9. Optional: Click on the **Guest 1** and **Guest 2** tab and repeat steps 5 to 8 for the guest devices.

Complementary information

You can define different operating modes with different settings for reduced resolution (Advanced). The **Parameters for reduced resolution** page is available for every defined operating mode.

You can deactivate reduced resolution (Advanced) for individual operating modes.

Further topics

- "Reduced resolution", page 39

7.6.3.14 Configuring operating modes

Prerequisites

- An operating mode selector switch or a controller is connected or (only for a non-safety-related use of the function) an IO-Link connector is connected.

Procedure

1. In the **Navigation** area, click on **Hardware configuration**.
✔ The **Hardware configuration** page opens.

2. Drag the element used for the input signals (**Operating mode switch** or **IO-Link**) to the intended connection.
3. For IO-Link only: In the **Properties** area. activate the **Operating modes** checkbox.
4. In the **Navigation** area, click on **Operating modes**.
✔ The **Operating modes** page opens.
5. Activate the **Activate operating modes** checkbox.
✔ A table for creating the operating modes appears. A standard operating mode (required) is created with the current configuration.
6. When using an operating mode selector switch: Enable the **Input evaluation tolerance time** checkbox and enter the desired time.
7. If required: Activate the **Monitoring of the maximum operating mode switchover time** checkbox and enter the desired time.
8. Add the desired operating modes to the table. Click on the plus symbol at the right-hand end of the table and select the desired operating mode:
   - **Add standard operating mode**
   - **Add alignment mode**
   - **Add OSSD OFF mode**

   You need several standard operating modes if you want to use a function (e.g., muting) with different settings.

Complementary information

Further configuration of the standard operating modes is carried out in the areas for the corresponding functions (e.g., muting). You can check the respective settings of the created standard operating modes in the overview table on the **Operating modes** page.

No further settings are required for the alignment mode and OSSD OFF mode.

Further topics

- "Operating modes", page 82

7.6.3.15 Configuring muting

Overview

Depending on the extension module connected, you can select one of the following muting variants:

- Cross muting
- Exit monitoring
- Entry/exit monitoring (only with DMM4)

Prerequisites

- The muting sensors required for the muting variant are connected.
- Optional: The supplementary signals used for muting are connected.
- Optional (for override): A pushbutton control switch or a pushbutton control switch with key switch is connected.

Procedure

1. In the **Navigation** area, click on **Hardware configuration**.
✔ The **Hardware configuration** page opens.
2. Drag two (four for entry/exit monitoring) **Muting signal** elements to the connections to which the muting sensors are connected.
   - For cross muting and exit monitoring, the muting signals must be present at the In1 (A1) and In2 (A2) inputs on the extension connection or at the In4 (A1) input on the system connection and In2 (A2) input on the extension connection.

When using the DMM4 extension module, the muting signals may also be present at the In5 (A1) and In6 (A2) inputs of the extension module.
    - For entry/exit monitoring, the muting signals must be present at the In5 (A1), In6 (A2), In7 (B1) and In8 (B2) inputs of the DMM4 extension module.
3. If required: Drag the **Muting release** element to the connection to which the supplementary signal is connected.
4. If required: Drag the **Switching from partial muting to muting** element to the connection to which the supplementary signal is connected.
5. For override: Drag the **Command device pushbutton** or **Command device pushbutton with key switch** element to the connection to which the pushbutton or the pushbutton with key switch control device is connected.
6. For override: In the **Properties** area, select the desired switching function.
    - **Override**: If you use the pushbutton or key switch exclusively for override.
    - **Reset/Override**: If you also use the pushbutton for the restart interlock.
7. In the **Navigation** area, click on **Muting**.

✔ The **Muting** page opens.

8. Activate the **Activate muting** checkbox.
9. Select the desired muting variant.
10. In the **Navigation** area, click on **Parameters for muting**.

✔ The **Parameters for muting** page opens.

11. Set the desired muting parameters.

✔ You have configured muting. When the muting conditions are valid, all light beams of the protective field are then bypassed. You can use partial muting to define individual light beams that remain active even if the muting conditions are valid.

12. Continue with the following steps to configure partial muting.
13. In the **Navigation** area, click on **Partial muting**.

✔ The **Partial muting** page opens.

14. Activate the **Activate partial muting** checkbox.
15. Select beams that should remain monitored even if the muting conditions are valid.

Complementary information

You can define different operating modes with different muting settings. The **Parameters for muting** and **Partial muting** pages are available for each defined operating mode.

You can deactivate muting for individual operating modes. You cannot select different muting variants, however.

Further topics

- "Muting", page 42
- "Data sheet", page 232

7.6.3.16 Activating IO-Link for control

Overview

Communication via IO-Link is activated by default and can be used to read out diagnostic and configuration data.

For a non-safety-related use, you can also activate the control of individual functions via IO-Link.

Prerequisites

- An IO-Link connector is connected.

Procedure

1. In the **Navigation** area, click on **Hardware configuration**.
✔ The **Hardware configuration** page opens.
2. Drag the **IO-Link** element to the connection to which the IO-Link connector is connected.
3. In the **Properties** area, activate the checkboxes for the functions that are to be controlled via IO-Link.

Further topics

- "IO-Link", page 120

7.6.3.17 Deactivating IO-Link

Overview

Communication via IO-Link is activated by default and can be used to read out diagnostic and configuration data.

You can deactivate communication via IO-Link.

Procedure

1. In the **Navigation** area, click on **General**.
✔ The **General** page opens.
2. Deactivate the **Activate IO-Link for diagnostics** checkbox.

7.6.3.18 Activating external device monitoring (EDM)

Prerequisites

- The auxiliary contacts of the contactors are connected to an EDM input.

Procedure

1. In the **Navigation** area, click on **Hardware configuration**.
✔ The **Hardware configuration** page opens.
2. Drag the **External device monitoring (EDM)** element to the connection to which the auxiliary contacts of the contactors are connected.

7.6.3.19 Activating inputs for safety sensors (SDI)

Prerequisites

- Function package DMM4
- At least one safety sensor is connected.

Procedure

1. In the **Navigation** area, click on **Hardware configuration**.
✔ The **Hardware configuration** page opens.
2. Drag the **Safety device inputs (SDI)** element to the connection to which the safety sensor is connected.
3. Optional: Repeat the step for other safety sensors.

Complementary information

- You can output the status of the safety sensors via an application diagnostic output.

Further topics

- "Inputs for safety sensors (SDI)", page 123

7.6.3.20 Configuring Smart Box Detection

Prerequisites

- Function package DCM4
- Optional (for Smart Box Detection Override): A pushbutton control switch or a pushbutton control switch with key switch is connected.

Procedure

Configure control switch for Smart Box Detection Override (optional):

1. In the **Navigation** area, click on **Hardware configuration**.
✔ The **Hardware configuration** page opens.
2. Drag the **Command device pushbutton** or **Command device pushbutton with key switch** element to the connection to which the pushbutton or the pushbutton with key switch control device is connected.
3. In the **Properties** area, select the desired switching function.
   - **Override**: If you use the pushbutton or key switch exclusively for Smart Box Detection Override.
   - **Reset/Override**: If you also use the pushbutton for the restart interlock.

To configure Smart Box Detection:

1. In the **Navigation** area, click on **Smart Box Detection**.
✔ The **Smart Box Detection** page opens.
2. Activate the **Activate Smart Box Detection** checkbox.
✔ The **Parameters for smart box detection** page opens.
3. Set the desired parameters for Smart Box Detection.
✔ You have configured Smart Box Detection.

Complementary information

You can define different operating modes with different settings for Smart Box Detection. The **Parameters for smart box detection** page is available for every defined operating mode.

You can deactivate Smart Box Detection for individual operating modes.

Further topics

- "Smart Box Detection", page 61

7.6.3.21 Configuring blanking

Overview

In a cascade, you can configure different settings for host, guest 1 and guest 2.

Prerequisites

- Automatic calibration of the protective field width is deactivated.
- For cascade: The devices are entered in the hardware configuration.

Procedure

1. In the **Navigation** area, click on **Blanking**.
✔ The **Blanking** page opens.
2. Activate the **Activate blanking** checkbox.
3. In the **Navigation** area, click on **Parameters for blanking**.
✔ The **Parameters for blanking** page opens.
4. On the tab of the individual device or on the **Host** tab under **Configuration**, click on **Add object**.
✔ An object for blanking is created.

5. Configure the desired settings under **Object 1** .
6. Optional: Repeat the last two steps. You can configure up to 4 objects.
7. Optional: Click on the **Guest 1** and **Guest 2** tabs and repeat steps 4 to 6 for the guest devices.

Complementary information

You can define different operating modes with different settings for blanking. The **Parameters for blanking** page is available for every defined operating mode.

You can deactivate blanking for individual operating modes.

Further topics

- "Blanking", page 72

7.6.3.22 Configuring teach-in for fixed blanking

Overview

In a cascade, you can configure different settings for host, guest 1 and guest 2.

Prerequisites

- Function package DCM4
- Fixed blanking is active.
- A control switch for teach-in for fixed blanking is connected.
- For cascade: The devices are entered in the hardware configuration.

Procedure

1. In the **Navigation** area, click on **Hardware configuration**.
✔ The **Hardware configuration** page opens.
2. Drag the **Teach-in for fixed blanking** or **Command device pushbutton with key switch** element to the connection to which the signal or control switch is connected.
3. In the **Navigation** area under **Blanking**, click on **Teach-in**.
✔ The **Teach-in for fixed blanking** page opens.
4. Optional: If the safety light curtain is used in a cascade, teach-in is activated by default for all devices in the cascade. If necessary, deactivate the default setting under **Teach-in active for:** for the respective device in the cascade.
5. Then configure the desired parameters for teach-in.
✔ You have configured teach-in for fixed blanking.

Complementary information

You can define different operating modes with different settings for teach-in. The **Teach-in for fixed blanking** page is available for every defined operating mode.

You can deactivate teach-in for individual operating modes.

Further topics

- "Teach-in", page 76

7.6.3.23 Configuring object pattern recognition

Prerequisites

- Function package DCM4
- Automatic calibration of the protective field width is deactivated.
- The device is configured with horizontal protective field alignment.

Procedure

1. In the **Navigation** area, click on **Object pattern recognition**.
✔ The **Object pattern recognition** page opens.
2. Activate the **Activate object pattern recognition** checkbox.
3. In the **Navigation** area under **Object pattern recognition**, click on **Parameters for object pattern recognition**.
✔ The **Parameters for object pattern recognition** page opens.
4. Under **Application**, select the desired application for object pattern recognition.
5. Depending on the application selected, configure the appropriate settings for the parameters.
✔ You have configured object pattern recognition.

Complementary information

You can define different operating modes with different settings for object pattern recognition. The **Parameters for object pattern recognition** page is available for each defined operating mode.

You can deactivate object pattern recognition for individual operating modes.

Further topics

- "Object pattern recognition", page 87

7.6.3.24 Identification

Overview

On the **Identification** page, you can optionally enter attributes for the system. The attributes are used to identify the system (and the associated devices) or to differentiate between different systems. The attributes appear in reports and in the diagnostic data.

Device name

If a number of systems are used in an application or in a project, a unique device name helps to tell the individual devices apart.

Project name

The project name is used to identify an entire project. The same project name should be chosen for all systems in the project.

Application name

The application name can be the same for a number of systems in the project.

User name

The optional user name helps later users to find a contact for the application.

Application image

An image helps to identify the application more quickly. The application image is saved in the project file on the computer. Safety Designer supports the following file formats: BMP, GIF, JPG, PNG, TIF.

Description

A description makes it easier to understand an application's context more quickly.

7.6.4 Starting and stopping safety function

Overview

In some situations, for example tests during commissioning, you can start or stop the safety function manually.

Procedure

Start safety function

→ Click on the button.

Stop the safety function

→ Click on the button.

7.6.5 Report

Overview

A report shows the settings and data of a system. You have the option of saving and archiving this data as a PDF.

Report

When you open the **Report** dialog box, the Safety Designer creates a report. If you click on **Update** after making changes to the configuration, you will receive an updated report.

Composition of the report

You can assemble the contents of the report as required.

Complementary information

National and international standards promote or recommend specific data and the person responsible for it. The required data are included in the report.

7.6.6 Service

Overview

The service functions are always performed for the entire system (all devices of the ESPE with connected extension module).

You can run the following under service:

- Reboot device
- Reset the device to factory settings
- Manage user groups and passwords
- Activate/deactivate the laser alignment aid

7.6.6.1 Assigning or changing passwords

Prerequisites

- The system is connected to the computer.

Procedure

1. Open the connected system in the device window.
2. Click on **Identify the device** on the toolbar to check that the desired system is connected.

✔ The FIELD LED of the connected devices and the STATE LED of the extension

module flash red and green alternately.
3. In the device window under the main navigation **Service**, select the **User password** entry.
4. If you are assigning the password for a user group for the first time, the user group may need to be activated first.
5. In the **User password** dialog box, select the user group.
6. Enter the new password twice and use **Transmit to device** to confirm.
7. When you are prompted to log on, select your user group and enter the corresponding password.

✔ The new password is valid for the user group immediately.
✔ The new password applies to the entire system (all devices of the ESPE with connected extension module).

7.6.6.2 Resetting the password

Overview

If you have forgotten the password of the Administrator user group, you can reset it with the assistance of SICK.

Prerequisites

- The system is connected to the computer.

Procedure

1. Request the form for resetting your password from SICK support.
2. Open the connected system in the device window.
3. Ensure that the desired system is connected, click on **Identify the device** in the toolbar.

✔ The FIELD LED of the connected devices and the STATE LED of the extension module flash red and green alternately.

4. In the main navigation pane, click on **Service**.
5. In the **Navigation** area, click on **User password**.
6. In the **User password** dialog box, select the **Start password reset process** option.
7. Send the information displayed on the form to SICK support.

✔ You will then receive an activation code.

8. Enter and confirm the activation code in the field provided.

✔ The password for the Administrator user group is reset to the factory settings (SICKSAFE) for the entire system (all devices of the ESPE with connected extension module).
✔ The Maintenance and Authorized Client user groups are deactivated for the entire system. The configuration is not changed.

Further topics

- "User groups", page 191

7.6.6.3 Reset to factory settings

Prerequisites

- The system is connected to the computer.

Procedure

1. Open the connected system in the device window.
2. Ensure that the desired system is connected, click on **Identify the device** in the toolbar.

✔ The FIELD LED of the connected devices and the STATE LED of the extension

module flash red and green alternately.

3. In the main navigation pane, click on **Service**.
4. In the **Navigation** area, click on **Factory settings**.

✔ The **Factory settings** page opens.

5. In the **Reset device completely** area, click on **Resetting the device completely**.

✔ The system (all devices of the ESPE with connected extension module) is reset to the factory settings.
✔ If devices are connected in a cascade, the cascading is configured automatically.
✔ If 24 V is present at the EDM input, the external device monitoring is activated automatically.

7.7 Service functions of the mobile app

Overview

You can use various service functions with the SICK Safety Assistant app. If the service function may only be executed by certain user groups, you will be asked to enter the corresponding password.

- Starting and stopping the safety function
- Reboot device
- Reset the device to factory settings
- Manage user groups and passwords
- Activate/deactivate the laser alignment aid

Important information

NOTICE

If you change passwords using the Safety Assistant app with a de-energized system and using the default password, unauthorized persons must be prevented from accessing the contents of the NFC tag.

This is relevant until the system is commissioned. When the voltage supply is active, the new passwords are adopted by the system and the contents of the NFC tag are overwritten.

NOTICE

If you reset the system to factory settings using the SICK Safety Assistant app when the system is de-energized, the voltage supply must then be restored to complete the process.

Prerequisites

- NFC-enabled device, e.g., a smartphone
- Existing connection with the device in the SICK Safety Assistant app

Complementary information

The SICK Safety Assistant app is available for devices with the following operating systems:

- Android
- iOS

Further topics

- "User groups", page 191

7.8 User groups

Overview

The devices contain a hierarchy of user groups that regulate access to the devices. The devices in a system use the same password.

For certain actions (e.g., transferring a configuration), you are requested to log onto the connected system with the respective user group.

User groups

Table 71: User groups

User group		Password	Authorization
	Operator	No password required. Anyone can log on as a machine operator.	• May read configuration from the device.
	Maintenance personnel	Deactivated ex-works, i.e. it is not initially possible to log on as a maintenance technician. The user group can be activated by the user group administrator and provided with a password.	• May read configuration from the device. • May transfer verified configuration to the device. • Changing own password allowed.
	Authorized client	Deactivated ex-works, i.e. it is not initially possible to log on as an authorized customer. The user group can be activated by the user group administrator and provided with a password.	• May read configuration from the device. • May transfer verified and unverified configuration to the device. • May verify configuration. • Changing own password allowed. • Changing the password of the **Maintenance personnel** user group is allowed.
	Administrator	The password SICKSAFE is created at the factory. → Change this password to protect the device against unauthorized access.	• May read configuration from the device. • May transfer verified and unverified configuration to the device. • May verify configuration. • Resetting whole device to factory settings allowed. • Activating and deactivating the **Maintenance personnel** and **Authorized client** user groups is allowed. • Changing own password allowed. • Changing the passwords of the **Maintenance personnel** and **Authorized client** user groups is allowed.

7.9 Automatic restoration of the configuration when a device is replaced

Overview

Receivers and extension modules save the software configuration of the entire system (all devices of a single system or a cascade).

You can therefore replace individual devices in your system without having to configure the replacement devices.

If you use a device that may already have been configured to replace a (defective) device in the system, reset it to the factory settings first.

You can also replace several devices in the system at the same time. To restore the entire system, however, at least the extension module or a receiver must be retained for software configuration.

Table 72: Options for restoring the configuration when replacing the device

System	Extension module remains	At least one receiver remains	At least one sender remains
Single system with software configuration	The extension module transfers the configuration to the newly connected devices: • Receiver • Sender [1]	The receiver transfers the configuration to the newly connected devices: • Extension module [2] • Sender [1]	The sender only contains the sender configuration and cannot transfer any configuration to newly connected devices.
Single system with configuration via system plug	No configuration saved in the configuration memory of the extension module.	No automatic restoration of the configuration possible.	
Cascade with software configuration	The extension module transfers the configuration to the newly connected devices: • Receiver • Sender [1]	The receiver transfers the configuration to the newly connected devices: • Extension module [2] • Receiver • Sender [1]	The sender only contains the sender configuration and transmits this to newly connected senders.
Cascade with configuration via system plug	No configuration saved in the configuration memory of the extension module.	The receiver transfers the configuration to the newly connected receivers.	The sender only contains the sender configuration and transmits this to newly connected senders.

1) Only applies if the sender and receiver are connected and the sender has also been configured via software. Otherwise, automatic restoration of the sender configuration is not possible. In this case, establish the connection between the sender and receiver or configure the sender via the system plug.

2) Only applies if the configuration memory of the extension module does not contain a configuration. If the configuration memory of the extension module contains a configuration, this is transferred to the receiver (and the other devices).

Important information

NOTICE

If you connect an extension module with a configuration to the ESPE, the system applies the configuration from the configuration memory of the extension module.

→ Ensure that the configuration memory of the new extension module contains no configuration or the intended configuration.

NOTICE

After replacing the device, check whether the configuration has been transferred to the replacement device as expected.

NOTICE

After replacing the sender, check whether the replacement device is using the correct transmitting power.

Complementary information

If the software configuration saved in the receiver or extension module also contains the sender configuration, the sender must also be connected to the receiver to automatically restore the configuration of a device.

When the configuration is restored automatically, the replacement device also adopts the user group and password settings in addition to the configuration.

Once the configuration has been restored and transferred to a replacement device, the following devices switch to configuration mode:

- Sender: If a sender has been replaced, all senders switch to configuration mode.
- Receiver: If a receiver or the extension module has been replaced, all receivers switch to configuration mode.

Further topics

- "Configuration mode", page 150

8 Commissioning

8.1 Overview

Important information

NOTICE
Before commissioning, check that the sender is using the correct transmitting power.

Prerequisites

- Project planning is completed.
- Mounting is completed.
- Electrical installation is completed.
- Configuration is completed.
- The correct transmitting power is set for the sender.
- Dangerous state of the machine is and remains off during commissioning.
- The outputs of the device do not affect the machine during commissioning.
- The machine has been inspected and released by qualified safety personnel.
- Protective device works properly.
- The protection function is checked after each change to the machine or to the integration or the operating and boundary conditions of the device. If necessary, a new commissioning is carried out.

Procedure

1. If required: Connect up to three devices to form a cascade.
2. Check the DIP switches at the sender and receiver and set them correctly if required.
3. Fitting the system plug.
4. If required: Connect the receiver and sender using an extension module.
5. Switch on the voltage supply.
   - If a change to the configuration is detected or the device has been reset to the factory settings, the device is in configuration mode and the field indicator flashes green.
6. Configure the system:

   For software configuration:
   - Transfer the software configuration from Safety Designer.

   For configuration on the system plug:
   - If required: Configure restart interlock.
   - If the configuration for the cascading of the restart interlock or external device monitoring needs to be changed, reset the device to factory settings.
7. Once configuration is complete, start the safety function, restart the device, or briefly interrupt the voltage supply and switch it back on.
8. After completing the configuration, align the sender and receiver.
9. Check the protective device.

Further topics

- "Project planning", page 27
- "Mounting", page 130
- "Electrical installation", page 140
- "Configuration", page 148
- "Aligning the sender and receiver", page 195
- "Check during commissioning and modifications", page 200

8.2 Switching on

Overview

After switching on, the sender and receiver initialize. All LEDs on the sender and receiver will light up briefly. They then indicate the following information:

- If a change to the configuration is detected or the device has been reset to the factory settings, the device is in configuration mode and the field indicator flashes green.
- The field indicator and diagnostic LEDs indicate the current configuration.
- The receiver indicates the alignment quality using diagnostic LEDs 1, 2, 3 and 4 after a few seconds.

  Diagnostic LEDs 5 and 6 light up if the topmost beam (far from system plug) is synchronized. Diagnostic LEDs 7 and 8 light up if the bottommost beam (near system plug) is synchronized.
- In normal operation, the diagnostic LEDs indicate the current configuration. The field indicator, the STATE LED of the sender and the OSSD LED of the receiver also light up.

Further topics

- "Configuration mode", page 150
- "Indications when switching on", page 205

8.3 Aligning the sender and receiver

Overview

Once mounting and electrical installation are complete, the sender and receiver must be aligned with each other.

Important information

DANGER
Dangerous state of the machine

→ Make sure that the dangerous state of the machine is (and remains) switched off during the alignment process.
→ Ensure that the outputs of the ESPE have no effect on the machine during the alignment process.

DANGER
Hazard due to lack of effectiveness of the protective device

The integrated laser alignment aid switches the OSSDs to the OFF state.

→ Ensure that the outputs of the ESPE have no effect on the machine when the integrated laser alignment aid is activated.
→ Only use the integrated laser alignment aid to align the ESPE.

DANGER

Hazard due to lack of effectiveness of the protective device

The integrated laser alignment aid may influence the receiver of an ESPE in close proximity. In such cases, the neighboring ESPE may not detect persons or parts of the body that require protection.

→ Perform an alignment or take other measures to ensure that the laser beam only hits the front screen of the relevant receiver. The laser beam must not hit any external receiver should the integrated laser alignment aid be switched on by mistake or due to a fault. An external receiver is a receiver that is not part of the same ESPE or same cascade.

→ During alignment in particular, make sure that the laser beam does not hit any external receiver.

NOTE

While aligning to the indication of the alignment quality, pay attention to the synchronization indication of the topmost and bottommost beam and the bracket with which the sender and receiver are attached.

Prerequisites

- Sender and receiver have been mounted at the correct height.
- The sender and receiver can be rotated in the brackets. If necessary, loosen the fixing screws slightly.
- The protective field is free of objects or blanked objects are located in the intended places in the protective field. If objects or body parts (e.g. hand, tool, optional AR60 laser alignment aid) are unexpectedly detected in the protective field, diagnostic LED 1 and 2 at most light up during alignment.

Procedure

1. Switch on the voltage supply of the ESPE.
2. Roughly align the sender with the receiver: Rotate the sender so that it points toward the receiver.
   → If required, you can activate the integrated laser alignment aid (e.g., via a connected switch or pushbutton). Turn the sender so that the beam of the integrated laser alignment aid hits the area of diagnostic LEDs 1, 2, 3 and 4 on the longitudinal axis of the receiver.
3. Align the receiver to the sender: Turn the receiver and pay attention to the indication of the alignment quality and the synchronization status of the topmost and bottommost beams.
   → If a hand or a tool is in the protective field during the alignment, but diagnostic LEDs 5, 6, 7 and 8 are already lit up, remove the object and continue with step 6.
   → If a blanked object covers the first or last beam, the diagnostic LEDs 5 and 6 or 7 and 8 may not light up. The object does not have to be removed, however.
4. Align the sender to the receiver with more precision as needed and pay attention to the indication of the alignment quality and the synchronization status of the topmost and bottommost beams.
5. Align the receiver to the sender with more precision as needed and pay attention to the indication of the alignment quality and the synchronization status of the topmost and bottommost beams.
6. If at least 3 (better: 4) of diagnostic LEDs 1, 2, 3 and 4 and diagnostic LEDs 5, 6, 7 and 8 light up blue, fix the components in place in the brackets. Torque: 2.5 Nm ... 3 Nm.

7. Switch the voltage supply off and back on again.
8. Check diagnostic LEDs 1 ... 4 for the alignment quality and the diagnostic LEDs 5 ... 8 for the synchronization of the topmost and bottommost beams in order to ensure that the components are still aligned with each other correctly.

NOTE
If suitable wiring has been established, activate the integrated laser alignment aid.

Complementary information

In many cases, the optional AR60 laser alignment aid and the alignment tool available as an accessory can make alignment even easier. If deflector mirrors are installed, the AR60 laser alignment aid can be used at the receiver. If there is a large protective field height, it can be used at the top end of the sender and at the receiver.

Since the optional AR60 laser alignment aid is placed with the adapter inside the protective field of the ESPE, at most diagnostic LEDs 1 and 2 light up blue and the OSSD LED lights up red. To check whether the OSSD LED of the receiver lights up green and diagnostic LEDs 5,6,7 and 8 light up blue, remove the optional AR60 laser alignment aid.

If a reduced resolution is configured, the ESPE may evaluate beams that are not correctly aligned as ignored objects. In this case, the integrated alignment indicator signals a very good alignment, even if the alignment is actually not optimal. This can lead to reduced availability. To ensure optimum alignment at reduced resolution, the alignment can also be checked.

Options for additional checking when reduced resolution is configured:

- Checking the beam status via the Safety Designer or the mobile app:
  If the protective field is clear, all beams should be displayed as clear.
- Checking via ADO that no ignored object was detected in the protective field.
  An application diagnostic output can be configured for "Ignored object". If the protective field is clear, the application diagnostic output should not report any ignored objects.
- Check with an object (test rod) corresponding to the maximum size of ignored objects for the configured reduced resolution.
  If the object is moved through the entire, otherwise clear protective field, the field indicator should remain permanently green.

Further topics

- "Alignment with the QuickFix bracket", page 197
- "Alignment with the FlexFix bracket or with the replacement bracket", page 198
- "Alignment quality display", page 199
- "Diagnostic LEDs", page 204
- "Accessories", page 263

8.3.1 Alignment with the QuickFix bracket

Prerequisites

- The sender and receiver have been mounted using a QuickFix bracket.

Alignment with the QuickFix bracket

The QuickFix bracket offers you the following adjustment options for aligning the sender and receiver with each other:

- Displacement along the device axis

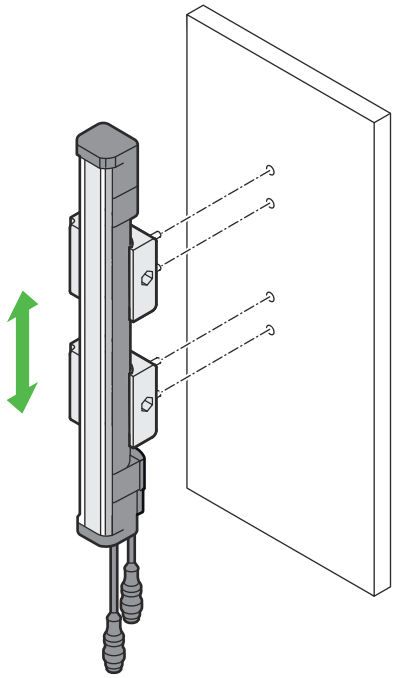

Figure 75: QuickFix bracket: adjustment

8.3.2 Alignment with the FlexFix bracket or with the replacement bracket

Prerequisites

- A FlexFix bracket or replacement bracket has been used to mount the sender and receiver.

Alignment with the FlexFix bracket or the replacement bracket

The FlexFix bracket and replacement bracket offer you the following adjustment options for aligning the sender and receiver with each other:

- Displacement along the device axis
- Rotation around the device axis (± 15°) [14].

14) If muting arms are attached to the sender or receiver, the devices can be rotated by ± 5° around their longitudinal axis

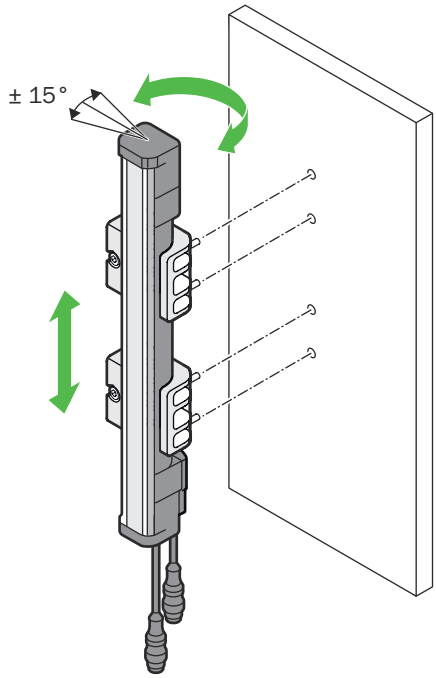

Figure 76: FlexFix bracket: adjustment/rotation

NOTE
Recommendation for aligning a long device so that it rotates uniformly in both brackets:

→ Grab the alignment device roughly in the center between the two brackets.

8.3.3 Alignment quality display

Important information

NOTE
As soon as the diagnostic LEDs 1, 2 and 3 light up, the alignment is good and availability is stable.

Body parts or objects in the protective field (e.g., hand, tool, AR60 optional laser alignment aid) may impair the indication of the alignment quality (at most diagnostic LEDs 1 and 2 light up).

→ Ensure that no body parts or objects are in the protective field
Or
→ Watch out for diagnostic LEDs 5, 6, 7 and 8. If diagnostic LEDs 5, 6, 7 and 8 light up, the alignment is good and availability is stable.
Exception: If blanking is configured and a blanked object covers the first or last beam, the diagnostic LEDs 5 and 6 or 7 and 8 may not light up.

Alignment quality display

Position of the LEDs: see "Receiver displays", page 23.

If front screen contamination increases in ongoing operation, the laser alignment aid switches on or the alignment takes longer than 3 seconds, the receiver shows the alignment quality again.

Once the ESPE is aligned and the protective field is clear (field indicator: flashing yellow or lit up green), the alignment quality display switches off after a certain period of time.

Table 73: Alignment quality display

LEDs								Meaning
Diagnostic LEDs								
1	2	3	4	5	6	7	8	
○	○	○	○	○	○	○	○	Alignment is inadequate, or the protective field is at least partially interrupted. The receiver cannot synchronize with the sender.
● Blue	○	○	○					At least one beam is synchronized. However, the alignment is inadequate, or the protective field is at least partially interrupted.
● Blue	● Blue	○	○					The alignment or the signal strength is still not sufficient for stable availability, or the protective field is at least partially interrupted. [1]
● Blue	● Blue	● Blue	○					Alignment is good, stable availability. [1] [2]
● Blue	● Blue	● Blue	● Blue					Alignment is very good. [1]
				● Blue	● Blue			The topmost light beam (far from system plug) is synchronized.
						● Blue	● Blue	The bottommost light beam (near system plug) is synchronized.

○ LED off. ☀ LED flashes. ● LED illuminates.

1) If external device monitoring is configured and there is an EDM warning, diagnostic LED 1 flashes, while the other diagnostic LEDs 2, 3 and 4 indicate the alignment quality. If there is an error on the reset pushbutton, diagnostic LED 4 flashes, while the other diagnostic LEDs 1, 2 and 3 indicate the alignment quality.

2) If the protective fields are very wide, there is a possibility that diagnostic LED 4 does not light up, even with optimal alignment.

Further topics

- "Indications when switching on", page 205

8.4 Check during commissioning and modifications

The thorough check is intended to ensure that the safety functions are fulfilling their planned purpose and whether persons are being adequately protected.

→ Carry out the checks specified in the test plan of the manufacturer of the machine and the operating entity.

9 Operation

9.1 Overview

Complementary information

You can find additional information on IO-Link in the IODD and the SDD for SOPAS ET.

You can find additional information on NFC in the SICK Safety Assistant app.

Information on the status of the ESPE and on diagnostics and troubleshooting can be displayed as follows:

- Diagnostic LEDs

  Status and fault information, as well as diagnostics data, are displayed directly on the sender and receiver by means of the diagnostic LEDs.
- IO-Link

  Status and error information as well as diagnostics data can be read by means of an IO-link interface.
- NFC

  Status and fault information, as well as diagnostics data, can be read out to an NFC-capable device by means of an integrated NFC interface.
- Safety Designer configuration software

  Status and error information as well as diagnostic data can be read out via the Safety Designer configuration software in conjunction with an extension module.

Further topics

- "Diagnostic LEDs", page 204

9.2 Regular thorough check

The thorough check is intended to ensure that the safety functions are fulfilling their planned purpose and whether persons are being adequately protected.

→ Carry out the checks specified in the test plan of the manufacturer of the machine and the operating entity.

10 Maintenance

10.1 Regular cleaning

Overview

Depending on the ambient conditions of the safety light curtain, the front screens must be cleaned regularly and in the event of contamination. Static charges can cause dust particles to be attracted to the front screen.

The weld spark guard and deflector mirrors must be cleaned regularly and in the event of contamination.

With increasing contamination, the 2 illuminated diagnostic LEDs 1 and 2 indicate that the receiver is receiving a weak signal from the sender. If the device is not cleaned and contamination increases, the safety light curtain switches to the OFF state when contamination is high.

Important information

DANGER

Hazard due to lack of effectiveness of the protective device

Persons and parts of the body to be protected may not be recognized in case of non-observance.

→ Regularly check the degree of contamination on all components based on the application conditions.
→ Observe the information concerning test rod testing.

DANGER

Hazard due to lack of effectiveness of the protective device

Persons and parts of the body to be protected may not be recognized in case of non-observance.

→ Make sure that the optical properties of the front screens of the sender and receiver are not changed, e.g., by:
  - beading water, mist, frost, or ice formation. If applicable, remove films or other types of contamination, disconnect the voltage supply of the receiver and then switch it back on.
  - Scratches or damage. Replace the device if the front screen is scratched or damaged.
→ Make sure that all reflective surfaces and objects maintain a minimum distance from the protective field.
→ Make sure that no dispersive media (e.g., dust, fog, or smoke) are within the calculated minimum distance from the protective field.

NOTICE

→ Do not use aggressive or abrasive cleaning agents.
→ Recommendation: Use lens cleaner and lens cloths from SICK.

Prerequisites

- Dangerous state of the machine is and remains off during cleaning.
- The outputs of the device do not affect the machine during cleaning.

Procedure

1. Use a clean and soft brush to remove dust from the front screen.
2. Then wipe the front screen with a clean, damp cloth.
3. Check the alignment of the sender and receiver after cleaning.
4. Check the effectiveness of the protective device.

Further topics

- "Test rod check", page 125
- "Minimum distance from reflective surfaces", page 32

10.2 Regular thorough check

The thorough check is intended to ensure that the safety functions are fulfilling their planned purpose and whether persons are being adequately protected.

→ Carry out the checks specified in the test plan of the manufacturer of the machine and the operating entity.

11 Troubleshooting

11.1 Overview

Complementary information

You can find additional information on IO-Link in the IODD and the SDD for SOPAS ET.

You can find additional information on NFC in the SICK Safety Assistant app.

Information on the status of the ESPE and on diagnostics and troubleshooting can be displayed as follows:

- Diagnostic LEDs

  Status and fault information, as well as diagnostics data, are displayed directly on the sender and receiver by means of the diagnostic LEDs.
- IO-Link

  Status and error information as well as diagnostics data can be read by means of an IO-link interface.
- NFC

  Status and fault information, as well as diagnostics data, can be read out to an NFC-capable device by means of an integrated NFC interface.
- Safety Designer configuration software

  Status and error information as well as diagnostic data can be read out via the Safety Designer configuration software in conjunction with an extension module.

Further topics

- "Diagnostic LEDs", page 204

11.2 Security

DANGER

Hazard due to lack of effectiveness of the protective device

Persons and parts of the body to be protected may not be recognized in case of non-observance.

→ Immediately shut the machine down if the behavior of the machine cannot be clearly identified.

→ Immediately put the machine out of operation if you cannot clearly identify or allocate the error and if you cannot safely remedy the error.

→ Secure the machine so that it cannot switch on unintentionally.

NOTE

Additional information on troubleshooting is available from your SICK subsidiary.

11.3 Diagnostic LEDs

11.3.1 Indications when switching on

Overview

Immediately after switching on, all LEDs on the sender and receiver briefly light up.

Following this, the information below regarding configuration is indicated briefly.

Sender

Position of the LEDs: see "Sender displays", page 22.

Table 74: Indications on the sender when switching on

LEDs		Meaning
STATE	**Field**	
	○ (3 s)	Uncoded beam coding is configured. [1]
	Yellow, flashes once	Beam coding, code 1 is configured. [1]
	Yellow, flashes twice	Beam coding, code 2 is configured. [1]
	● Yellow (3 s)	Software configuration is active.
● Red	Yellow/green	Resetting the configuration to factory settings is activated via DIP switch, see "Factory settings", page 149.
● Red	Green	The device is in configuration mode, see "Configuration mode", page 150. OR Reset to factory settings is complete. OR Safety function is stopped.

○ LED off. LED flashes. ● LED illuminates. Empty cells mean that the LED lights up, flashes, or is off.

[1] No software configuration active.

Receiver

Position of the LEDs: see "Receiver displays", page 23.

Table 75: Indications on the receiver when switching on

LEDs										LED-end cap	Meaning
OSSD	**Field**	**Diagnostic LEDs**									
		1	**2**	**3**	**4**	**5**	**6**	**7**	**8**		
	○ (3 s)			○ (3 s)					○ (3 s)	○ (3 s)	Beam coding, uncoded is configured.[1]
	Yellow, flashes once			● White (3 s)					○ (3 s)	Yellow, flashes once	Beam coding, code 1 is configured.[1]

LEDs										LED-end cap	Meaning
OSSD	Field	Diagnostic LEDs									
		1	2	3	4	5	6	7	8		
	Yellow, flashes twice			● White (3 s)					○ (3 s)	Yellow, flashes twice	Beam coding, code 2 is configured.[1]
	Yellow (3 s)	○ (3 s)	○ (3 s)	○ (3 s)	○ (3 s)	○ (3 s)	○ (3 s)	○ (3 s)	● White (3 s)	Yellow (3 s)	Software configuration is active.
		● White (3 s)							○ (3 s)		External device monitoring (EDM) is configured. [1]
			● White (3 s)						○ (3 s)		Cascade with 1 guest or 2 guest devices is configured. [1]
					● White (3 s)				○ (3 s)		Restart interlock is configured. [1]
						● White (3 s)			○ (3 s)		Muting or partial blanking is configured. OR Smart Box Detection is configured. [1]
							● White (3 s)		○ (3 s)		Reduced resolution is configured. [1]
								● White (3 s)	○ (3 s)		Scanning range adjustment is configured. [1]
● Red	Yellow/green	○	○	○	○	○	○	○	○	Yellow/green	Resetting the configuration to factory settings is activated via DIP switch, see "Factory settings", page 149. [1]
● Red	Green									Green	The device is in configuration mode, see "Configuration mode", page 150. When a function is configured, the corresponding diagnostic LED flashes.[1] OR Reset to factory settings is complete. OR Safety function is stopped.

○ LED off. LED flashes. ● LED illuminates. Empty cells mean that the LED lights up, flashes, or is off.

[1] No software configuration active.

After the configuration is displayed, diagnostic LEDs 1, 2, 3 and 4 indicate the alignment quality. Additionally, the synchronization status of the topmost and bottommost beams of the ESPE are displayed by means of diagnostic LEDs 5 and 6 as well as 7 and 8.

If the configuration was changed, the diagnostic LEDs flash white for 3 s upon activation.

Once the ESPE is aligned and the protective field is clear (field indicator: flashing yellow or lit up green), the alignment quality display switches off after a certain period of time.

Table 76: Alignment quality display

LEDs								Meaning
Diagnostic LEDs								
1	2	3	4	5	6	7	8	
○	○	○	○	○	○	○	○	Alignment is inadequate, or the protective field is at least partially interrupted. The receiver cannot synchronize with the sender.
● Blue	○	○	○					At least one beam is synchronized. However, the alignment is inadequate, or the protective field is at least partially interrupted.
● Blue	● Blue	○	○					The alignment or the signal strength is still not sufficient for stable availability, or the protective field is at least partially interrupted. [1]
● Blue	● Blue	● Blue	○					Alignment is good, stable availability. [1] [2]
● Blue	● Blue	● Blue	● Blue					Alignment is very good. [1]
				● Blue	● Blue			The topmost light beam (far from system plug) is synchronized.
						● Blue	● Blue	The bottommost light beam (near system plug) is synchronized.

○ LED off. ☀ LED flashes. ● LED illuminates.

1) If external device monitoring is configured and there is an EDM warning, diagnostic LED 1 flashes, while the other diagnostic LEDs 2, 3 and 4 indicate the alignment quality. If there is an error on the reset pushbutton, diagnostic LED 4 flashes, while the other diagnostic LEDs 1, 2 and 3 indicate the alignment quality.

2) If the protective fields are very wide, there is a possibility that diagnostic LED 4 does not light up, even with optimal alignment.

11.3.2 Status indicator

Overview

During operation, the status of the ESPE is indicated with LEDs.

The information in the tables applies both for single devices and for every device in a cascade.

Sender

Position of the LEDs: see "Sender displays", page 22.

The LEDs of the sender indicate the same status as the LEDs of the receiver when the sender and receiver are connected and when the sender is in normal operation.

The OSSD state is displayed on the STATE LED of the sender and the status of the protective field is displayed on the field LED of the sender.

The status information is transferred from the receiver to the sender automatically. A configuration process is not required.

Table 77: LEDs on the sender during normal operation

LEDs		Description
STATE	Field	
● Yellow	○	Normal operation (sender and receiver are not connected to each other)
● Red	◐ ◐ Red/green	The device has been identified in Safety Designer.
● Red	◐ ◐ Yellow/green	Resetting the configuration to factory settings is activated via DIP switch.
● Red	◐ Green	The device is in configuration mode following a change to the configuration. OR Reset to factory settings is complete. OR Safety function is stopped.

○ LED off. ◐ LED flashes. ● LED illuminates.

Receiver

Position of the LEDs: see "Receiver displays", page 23.

Table 78: LEDs on the receiver during normal operation

LEDs										LED-end cap	Meaning
OSSD	Field	Diagnostic LEDs									
		1	2	3	4	5	6	7	8		
		● White							○		EDM is configured. [1]

LEDs										LED-end cap	Meaning
OSSD	Field	Diagnostic LEDs									
		1	2	3	4	5	6	7	8		
			● White						○		Cascade with 1 or 2 guest devices is configured. [1]
				● White					○		Code 1 or code 2 beam coding is configured. [1]
				○					○		Uncoded beam coding is configured. [1]
					● White				○		Restart interlock is configured. [1]
						● White			○		Muting or partial blanking is configured. [1] OR Smart Box Detection is configured. [1]
							● White		○		Reduced resolution is configured. [1]
								● White	○		Scanning range adjustment is configured. [1]
		○	○	○	○	○	○	○	● White		Software configuration is active.
	● Yellow (3 s)									● Yellow (3 s)	Update of the software configuration, e.g., during a software configuration or after a successful teach-in of the fixed blanking.
	● ● Red/green	○	○	○	○	○	○	○	○	● ● Red/green	The device has been identified in Safety Designer.
	○									○	The smart presence detection is configured. The guest device is in sleep mode.
● Green	● Green									● Green	The protective field of the host device is clear. The protective fields of guest devices in a cascade are clear. All blanked objects are recognized as expected. A valid operating mode is selected. SDI is active.
● Red	● ● Yellow/green	○	○	○	○	○	○	○	○	● ● Yellow/green	Resetting the configuration to factory settings is activated via DIP switch.
● Red	● Green									● Green	The device is in configuration mode following a change to the configuration. When a function is configured, the corresponding diagnostic LED flashes.[1] OR Reset to factory settings is complete. OR Safety function is stopped.

LEDs										LED-end cap	Meaning
OSSD	Field	Diagnostic LEDs									
		1	2	3	4	5	6	7	8		
Red	Green									Green	The device's own protective field is clear and all blanked objects in the device's own protective field are recognized as expected. The OSSDs are in the OFF state, however. The OSSDs can be in the OFF state for the following reasons, for example: • Cascade: At least 1 protective field of a device in the cascade is interrupted or there is an error at another device. • The laser alignment aid of the sender is switched on. • OSSD OFF mode activated. • SDI: At least one configured input for safety sensors is in the LOW state.
Red	Red									Red	Its own protective field is interrupted. The indicator is independent of the status of the other protective fields. OR The override pushbutton is currently being actuated while override is required. OR The protective field is clear. The reset button is currently being actuated while reset is required. OR The pushbutton for teach-in for fixed blanking is currently being actuated while reset is required. OR No valid operating mode is selected.
Red	Yellow/red									Yellow/red	Override required. OR Smart Box Detection Override required. Additional information on the override reason is available via the diagnostic LEDs 1 ... 8.
Red	Yellow									Yellow	The protective field is clear. Reset required.
					Yellow						The reset pushbutton is defective or is being actuated continuously. Check the wiring of the reset pushbutton.

LEDs										LED-end cap	Meaning
OSSD	Field	Diagnostic LEDs									
		1	2	3	4	5	6	7	8		
● Red		☀ Yellow									EDM warning: The EDM input has no signal. Check contactors and wiring. Switch the voltage supply off and then on again.
● Green	● Yellow									● Yellow	Muting is currently active. The protective field is bypassed. OR Smart Box Detection is configured. A valid object is located in the protective field. OR The device is in "Override" or "Smart Box Detection Override" status. OR Object pattern recognition is configured. A valid object is located in the protective field.
● Green	● Yellow						● White			● Yellow	Partial muting is currently active.
● Red	● Red	☀ Yellow	☀ Yellow	☀ Yellow	○	● Yellow	○	○	○	● Red	Muting The protective field is interrupted. The muting hold time was exceeded during exit monitoring. The muting sensors are no longer engaged. Make sure that the protective field is clear again.
● Red		☀ Yellow	○	○	○	● Yellow	○	○	○		Muting The protective field is interrupted. The muting hold time was exceeded during exit monitoring. One muting sensor is still engaged.
● Red		○	○	☀ Yellow	○	● Yellow	○	○	○		Muting The protective field is interrupted. The sensor gap monitoring has been exceeded.
● Red		☀ Yellow	☀ Yellow	○	○	● Yellow	○	○	○		Muting The protective field is interrupted. At least one active light beam was interrupted during the partial muting.
● Red		○	☀ Yellow	☀ Yellow	○	● Yellow	○	○	○		Muting The protective field is interrupted. At least one muting sensor is engaged. The muting condition is not met.

LEDs										LED-end cap	Meaning
OSSD	Field	Diagnostic LEDs									
		1	2	3	4	5	6	7	8		
● Red		☀ Yellow	○	○	☀ Yellow	● Yellow	○	○	○		Muting The protective field is interrupted. The total muting time was exceeded.
● Red		○	○	☀ Yellow	☀ Yellow	● Yellow	○	○	○		Muting The protective field is interrupted. The concurrence monitoring was exceeded.
● Red		○	○	○	☀ Yellow	● Yellow	○	○	● Yellow		Muting Error when detecting the muting direction. The protective field is interrupted.
● Red		○	○	☀ Yellow	○	● Yellow	○	○	● Yellow		Muting Error during sequence monitoring. The protective field is interrupted.
● Red		○	○	☀ Yellow	☀ Yellow	● Yellow	○	○	● Yellow		Muting Signal monitoring error after belt stop. The protective field is interrupted.
● Red		○	☀ Yellow	○	○	● Yellow	○	○	● Yellow		Muting Muting release signal invalid. The protective field is interrupted.
● Red		○	☀ Yellow	○	☀ Yellow	● Yellow	○	○	○		Smart Box Detection The protective field interruption is not contiguous. OR The protective field interruption does not start at the lowest light beam.
● Red		○	○	○	☀ Yellow	● Yellow	○	○	○		Smart Box Detection The object does not have the required minimum height.
● Red		○	☀ Yellow	○	○	● Yellow	○	○	○		Smart Box Detection The object is higher than the allowed maximum object height.
● Red		○	☀ Yellow	☀ Yellow	☀ Yellow	● Yellow	○	○	○		Smart Box Detection The protective field was interrupted during object entry above the object height detected later.

LEDs										LED-end cap	Meaning
OSSD	Field	Diagnostic LEDs									
		1	2	3	4	5	6	7	8		
● Red		☀ Yellow	○	☀ Yellow	○	● Yellow	○	○	○		Smart Box Detection The object height is above the saved object height after entry of the object. OR The protective field above the detected object is interrupted.
● Red		☀ Yellow	○	☀ Yellow	☀ Yellow	● Yellow	○	○	○		Smart Box Detection The object height is below the saved object height after entry of the object. An exit delay is configured.
● Red		☀ Yellow	☀ Yellow	○	☀ Yellow	● Yellow	○	○	○		Smart Box Detection The total time for Smart Box Detection has been exceeded. The object is still in the protective field.
● Red		☀ Yellow	☀ Yellow	☀ Yellow	☀ Yellow	● Yellow	○	○	○		Smart Box Detection The protective field is still interrupted after the expected object exit.
● Red											Smart Box Detection An object has been detected in the protective field while the OSSDs are in the OFF state.
		○	○	○	☀ Yellow	○	○	○	● Yellow		No operating mode or no standard operating mode with configuration selected after switching on. OR Change of operating mode is not complete.
● Red		○	○	☀ Yellow	○	○	○	○	● Yellow		OSSD OFF mode activated.
● Red		○	☀ Yellow	○	○	○	○	○	● Yellow		At least one configured input for safety sensors (SDI) is in the LOW state.
● Red	● Red	○	☀ Yellow	○	☀ Yellow	○	○	○	● Yellow	● Red	Reduced resolution (Advanced) The maximum number of ignored objects has been exceeded.
● Red	● Red	○	☀ Yellow	☀ Yellow	○	○	○	○	● Yellow	● Red	Blanking At least one blanked object was not recognized as expected.
● Red		○	☀ Yellow	☀ Yellow	☀ Yellow	○	○	○	● Yellow		Blanking An error occurred during teach-in for fixed blanking.

LEDs										LED-end cap	Meaning
OSSD	Field	Diagnostic LEDs									
		1	2	3	4	5	6	7	8		
● Red	● Red	◐ Yellow	○	○	○	○	○	○	● Yellow	● Red	Object pattern recognition An invalid object was detected in the protective field.

○ LED off. ◐ LED flashes. ● LED illuminates. Empty cells mean that the LED lights up, flashes, or is off.

1) If no software configuration is active.

If front screen contamination increases in ongoing operation, the laser alignment aid switches on or the alignment takes longer than 3 seconds, the receiver shows the alignment quality again.

Further topics

- "Alignment quality display", page 199
- "Connection of sender and receiver", page 114

11.3.3 Fault indicators

Overview

In the event of an error, the type of error is indicated by the LED display on the sender or receiver.

The information in the tables applies both for single devices and for every device in a cascade.

When a device in a cascade shows an error, the displays of the other devices in the cascade must also be observed. The fault cause is only shown on the device in which it occurs.

If an error is detected on the extension module, the receiver switches to error status.

Sender

Position of the LEDs: see "Sender displays", page 22.

Table 79: Fault indication on the sender

LEDs		Possible cause	Troubleshooting
STATE	**Field**		
Yellow	Red	Fault in the voltage supply.	→ Check the voltage supply, see "Technical data", page 231. → Switch the voltage supply off and then on again. → If the error persists, replace the sender, see "Ordering information", page 260.
Yellow	Red	The sender identified an internal fault.	→ Switch the voltage supply off and then on again or restart the device. → If the error persists, replace the sender, see "Ordering information", page 260.
Red	Yellow/green	Resetting the configuration to factory settings is activated via DIP switch.	For additional information: see "Factory settings", page 149.
Red	Green	The device is in configuration mode. OR Reset to factory settings is complete. OR Safety function is stopped.	For additional information: see "Configuration mode", page 150.
Green	Red	A problem occurred when resetting the configuration to factory settings via DIP switch.	→ Restart configuration, see "Factory settings", page 149.

LEDs		Possible cause	Troubleshooting
STATE	Field		
● Red	☀ Yellow	Incompatible device detected.	1. For a sender-receiver connection, ensure that the sender and receiver devices are compatible, see "Connection of sender and receiver", page 114. 2. Ensure that the connected sender devices as well as the connected receiver devices in a cascade are compatible, see "Cascading", page 118. 3. Ensure that the connected extension module is compatible, see "Extension module", page 20.
● Red	☀ Red	Communication fault between the senders in a cascade.	→ Check the cascade wiring. → Switch the voltage supply off and then on again or restart the device.
☀ Red	☀ Red	Error in the configuration	→ Check the configuration settings of the devices. → If the sender and receiver are connected to each other, also check the configuration of the receiver. → Switch the voltage supply off and then on again or restart the device. → When the software configuration is active, the DIP switches on the individual device or host must be set to Off.
○	☀ Red	The voltage is or was too high when operating the sender.	→ Check the voltage supply, see "Technical data", page 231. → Replace the sender, see "Ordering information", page 260.

○ LED off. ☀ LED flashes. ● LED illuminates.

1)) If the sender and receiver are connected by a cable, the LEDs on the sender indicate the same status as the LEDs on the receiver during normal operation. The STATE LED on the sender adopts the state of the OSSD LED on the receiver.

Receiver

Position of the LEDs: see "Receiver displays", page 23.

Table 80: Fault indication on the receiver

LEDs										LED-end cap	Possible cause	Troubleshooting
OSSD	Field	Diagnostic LEDs										
		1	2	3	4	5	6	7	8			
● Red	☀ Red	☀ Red	○	○	○	○	○	○	○	☀ Red	An internal fault has occurred.	→ Switch the voltage supply off and then on again or restart the device. → If the error continues to persist, replace the receiver, see "Ordering information", page 260.
● Red	☀ Red	○	☀ Red	○	○	○	○	○	○	☀ Red	Fault in the voltage supply.	→ Check the voltage supply and the power supply unit, see "Technical data", page 231. → Switch the voltage supply off and then on again. → If the error continues to persist, replace the receiver, see "Ordering information", page 260.
● Red	☀ Red	○	☀ Red	○	☀ Red	○	○	○	○	☀ Red	Permanent error in the voltage supply.	→ Replace the device, see "Ordering information", page 260.
● Red	☀ Red	○	☀ Red	☀ Red	☀ Red	○	○	○	○	☀ Red	General error in the configuration.	→ Check configuration settings including the permitted combination of functions or reconfigure the device. → Make sure that the correct system plug is used. → Reset the device to factory settings.

LEDs										LED-end cap	Possible cause	Troubleshooting
OSSD	Field	Diagnostic LEDs										
		1	2	3	4	5	6	7	8			
● Red	☀ Red	○	○	☀ Red	☀ Red	○	○	○	○	☀ Red	Parity faulty.	→ Check setting of the parity DIP switch. → Switch the voltage supply off and then on again or restart the device.
● Red	☀ Red	○	○	☀ Red	○	○	○	○	○	☀ Red	The receiver has recognized beams from several senders.	→ Check the distance to senders of the same design. → Check the beam coding of the receiver and systems in close proximity. → Ensure that beams from another sender cannot hit the receiver. (Exception: One of the two systems uses code 1 and the other uses code 2), see "Protection against interference from systems in close proximity to each other", page 35. → Switch the voltage supply off and then on again or restart the device.
● Red	☀ Red	○	○	○	☀ Red	○	○	○	○	☀ Red	A wiring fault has been identified at the OSSDs. E.g., at an OSSD: overvoltage, short-circuit, cross-circuit, permissible load capacity exceeded.	→ Check the system wiring for a fault. Make sure that the OSSDs have been wired correctly, see "Integration into the electrical control system", page 103. → Switch the voltage supply off and then on again or restart the device. → If the error continues to persist, replace the defective components, see "Ordering information", page 260.

LEDs										LED-end cap	Possible cause	Troubleshooting
OSSD	Field	Diagnostic LEDs										
		1	2	3	4	5	6	7	8			
● Red	☀ Red	○	☀ Red	☀ Red	○	○	○	○	○	☀ Red	A wiring fault has been detected. E.g., at an input: invalid signal, unexpected signal.	→ Check the system wiring for a fault. Ensure that the inputs are wired correctly. → Make sure that the IO-link interface was wired correctly. → Switch the voltage supply off and then on again or restart the device.
● Red	☀ Red	☀ Red	○	☀ Red	○	○	○	○	○	☀ Red	Incompatible device detected.	→ For a sender-receiver connection, ensure that the sender and receiver devices are compatible, see "Connection of sender and receiver", page 114. → Ensure that the connected sender devices as well as the connected receiver devices in a cascade are compatible, see "Cascading", page 118. → Ensure compatibility with the connected extension module. see "Extension module", page 20.
● Red		☀ Yellow									EDM warning (only if the external device monitoring function is active): The OSSDs have constantly been in the OFF state since the safety light curtain was switched on and no signal is present at the EDM input.	Normally, this message is displayed only briefly after switching on and goes out as soon as the voltage supply for the auxiliary contacts is established at the contactors. If the message is displayed for longer: → Check the contactors. → Check the wiring of the contactors. → Switch the voltage supply off and then on again or restart the device.

LEDs										LED-end cap	Possible cause	Troubleshooting
OSSD	Field	Diagnostic LEDs										
		1	2	3	4	5	6	7	8			
● Red	● Red	● Red	○	○	○	● Red	○	○	○	● Red	EDM fault (only if the external device monitoring function is active): The state of the EDM input has not changed within 300 ms following a change to the OSSD state. OR The state of the EDM input has changed even though the OSSD state has not.	→ Check the contactors. → Check the wiring of the contactors. → Switch the voltage supply off and then on again or restart the device.
● Red	● Yellow/green	○	○	○	○	○	○	○	○	● Yellow/green	Resetting the configuration to factory settings is activated via DIP switch.	For additional information: see "Factory settings", page 149.
● Red	● Green									● Green	The device is in configuration mode following a change to the configuration. OR Reset to factory settings is complete. OR Safety function is stopped.	For additional information: see "Configuration mode", page 150.
● Red	● Red	● Red	● Red	● Red	● Red	○	○	○	○	● Red	A problem occurred when resetting the configuration to factory settings via DIP switch.	→ Restart configuration, see "Factory settings", page 149.

LEDs										LED-end cap	Possible cause	Troubleshooting
OSSD	Field	Diagnostic LEDs										
		1	2	3	4	5	6	7	8			
● Red	☀ Red	○	● Red	○	○	○	○	○	☀ Red	☀ Red	Incompatible configuration of the devices in a host–guest cascade.	→ Check the configuration of the devices. If the sender and receiver are connected to each other, also check the configuration of the sender. Check the configuration of the extension module. → Switch the voltage supply off and then on again or restart the device. → If the error persists, reconfigure the device or, if necessary, reset it to the factory settings, see "Configuration", page 148.
● Red	☀ Red	○	● Red	○	○	○	○	☀ Red	○	☀ Red	Incompatible configuration of the devices in a host–guest–guest cascade.	→ Check the configuration of the devices. If the sender and receiver are connected to each other, also check the configuration of the sender. Check the configuration of the extension module. → Switch the voltage supply off and then on again or restart the device. → If the error persists, reconfigure the device or, if necessary, reset it to the factory settings, see "Configuration", page 148.

LEDs										LED-end cap	Possible cause	Troubleshooting
OSSD	Field	Diagnostic LEDs										
		1	2	3	4	5	6	7	8			
● Red	☀ Red	○	● Red	○	○	○	○	☀ Red	☀ Red	☀ Red	Communication fault between the receivers in a host–guest cascade.	→ Check the cascade wiring. → Switch the voltage supply off and then on again or restart the device. → If the error continues to persist, replace the defective components, see "Ordering information", page 260.
● Red	☀ Red	○	● Red	○	○	○	☀ Red	○	○	☀ Red	Communication fault between the receivers in a host–guest–guest cascade.	→ Check the cascade wiring. → Switch the voltage supply off and then on again or restart the device. → If the error continues to persist, replace the defective components, see "Ordering information", page 260.
● Red	☀ Red	○	● Red	○	○	○	☀ Red	○	☀ Red	☀ Red	Error in communication between the receiver and extension module.	→ Check wiring. → Switch the voltage supply off and then on again or restart the device. → If the error persists, replace the defective components.
● Red	☀ Red	☀ Red	○	○	○	● Red	○	○	○	☀ Red	The number of permitted override statuses for muting or Smart Box Detection has been exceeded.	→ Switch the voltage supply off and then on again or restart the device.
					☀ Yellow						Reset pushbutton fault.	→ Check that the reset pushbutton is working. The reset pushbutton may be defective or is being pressed continuously. → Check the wiring of the reset pushbutton.

LEDs										LED-end cap	Possible cause	Troubleshooting
OSSD	Field	Diagnostic LEDs										
		1	2	3	4	5	6	7	8			
● Red	☀ Red	○	○	● Red	○	○	○	○	☀ Red	☀ Red	Different beam coding on the sender and receiver detected.	→ Configure sender and receiver with the same beam coding. → Switch the voltage supply off and then on again or restart the device.
● Red	☀ Red	○	○	☀ Red	☀ Red	○	○	○	● Red	☀ Red	Error at the input for safety sensors (SDI).	→ Check the wiring of the SDI inputs for errors. → Check the function of the connected safety sensors. → Switch the voltage supply off and then on again or restart the device. → If the error persists, replace the defective components.
● Red	☀ Red	○	○	☀ Red	○	○	○	○	● Red	☀ Red	Error in the operating mode. Invalid combination of input signals for operating modes.	→ Check the wiring of the inputs for the operating modes for errors. → Check the function of the connected operating mode selector switch or controller. → Switch the voltage supply off and then on again or restart the device. → If the error persists, replace the defective components.
● Red	☀ Red	○	● Red	○	○	○	☀ Red	☀ Red	○	☀ Red	Error of the connected extension module.	→ Check the error of the connected extension module. → Switch the voltage supply off and then on again or restart the device.

LEDs										LED-end cap	Possible cause	Troubleshooting
OSSD	Field	Diagnostic LEDs										
		1	2	3	4	5	6	7	8			
● Red	☀ Red	☀ Red	○	☀ Red	☀ Red	○	○	○	○	☀ Red	Configuration not compatible with device/system (for senders/receivers with functional scope V 1.1.0/1.2.0 or higher).	→ Check the configuration of the devices. → Check the system setup and devices of the system. → Switch the voltage supply off and then on again or restart the device. → If the error persists, reconfigure the device or, if necessary, reset it to the factory settings.
● Red	☀ Red	☀ Red	○	○	☀ Red	○	○	○	○	☀ Red	Configured function is not available in the function package used (for senders/receivers with functional scope V 1.1.0/1.2.0 or higher).	→ Make the function available through another function package. → Adjust the configuration and deactivate unavailable functions.
● Red	☀ Red	○	○	○	☀ Red	○	○	○	● Red	☀ Red	When the software configuration is active, not all DIP switches are in the OFF position.	→ Set all DIP switches to the OFF position.

○ LED off. ☀ LED flashes. ● LED illuminates. Empty cells mean that the LED lights up, flashes, or is off.

11.4 Diagnostics using Safety Designer

Overview

The following diagnostics tools are available in the device window:

- Message history
- Data recorder
- Event history
- Status of the beams

The diagnostic data are transferred via the USB connection.

Prerequisites

- An extension module is connected.
- The system is connected to the computer.

11.4.1 Message history

On the **Message history** page, you can see all errors, warnings and information about the devices of the ESPE and the connected extension module.

You have the option of saving or printing the message history as a PDF. You can also mark all entries (from all displayed devices) as seen or delete them.

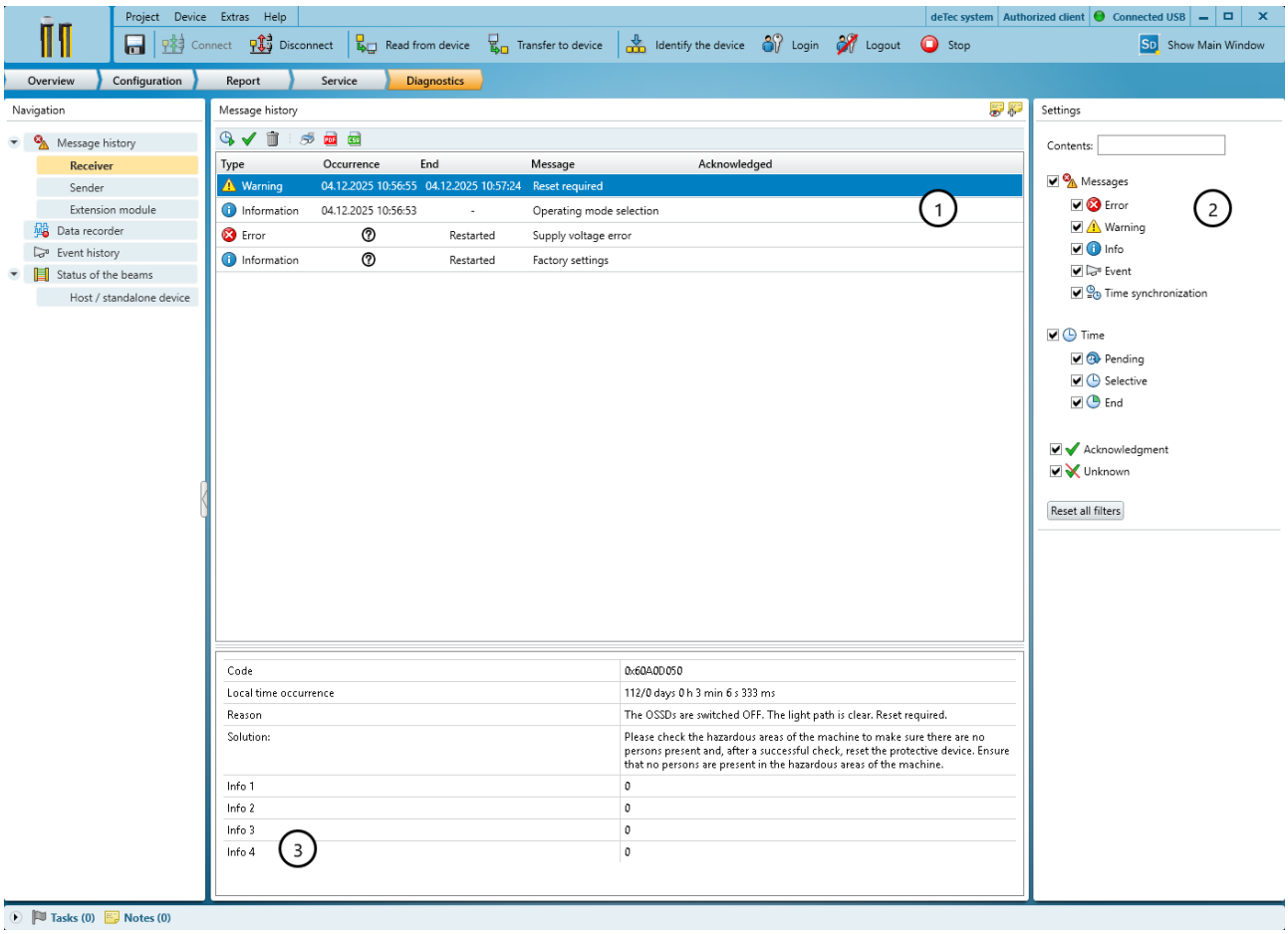

Figure 77: Message history

① Message history

② Display filter

③ Details about the selected message

By right-clicking on the table header, you can select the columns displayed in the message history.

Safety Designer shows details about the events in the bottom part of the window, ways to solve them are also shown.

Table 81: Message history

	Start automatic update
	Stop automatic update
	Mark all entries as viewed
	Delete all entries Deleted entries are hidden for the current user group and for user groups with lower permissions. They are still visible to user groups with higher permissions.
	Print message history
	Save message history as a PDF
	Save message history as CSV

11.4.2 Data recorder

Overview

You can use the data recorder to record the signals of the system and play saved recordings. The beam data of a single system or the host device in a cascade is updated every 50 ms at most.

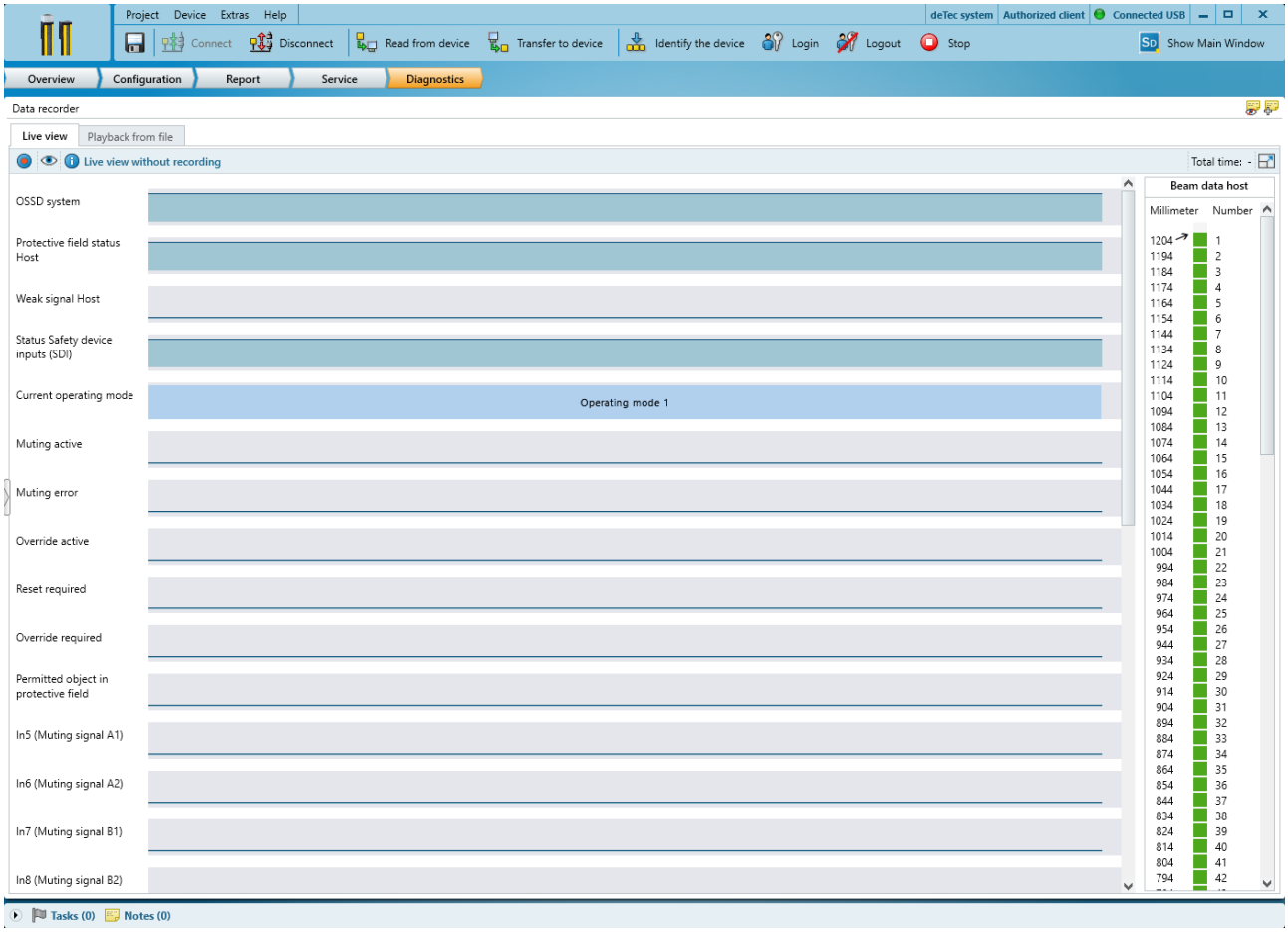

Figure 78: Live view

The data can be recorded and then saved in a data recorder diagnostic file.

You can play the data recorder diagnostic file in the data recorder.

Table 82: Data recorder

	Start recording
	Stop recording
	Selecting the displayed data and setting the display sequence
	Full screen mode

Prerequisites

- The system is connected to Safety Designer.

Typical applications

- Test the signals for a muting application
- Check input information on the current operating mode
- Check why a signal change occurred on the safety output

11.4.3 Event history

Overview

The event history displays information about the most recently stored events. Each change of the OSSDs to the OFF state is saved as an event.

Data source

- **Read from device**: Only available when a system is connected. The data stored in the system will be read.
- **Load file**: You can open a file that stores events that were previously read from a system.
- **Store data**: You can save the events read from a system to a file for later analysis.

Event table

The event table shows all events for which an OSSD has switched to the OFF state.

If you select an entry in the event table, further details of that event are displayed in the lower area.

The beam data of the host device for the last 5 scans before shutdown are available for each event. You can use these to analyze an unexpected shutdown. For example, you can determine the size of an object in the protective field that led to the shutdown.

The last signal changes before shutdown are available for the last 5 events. This allows you to check, for example, the status change of input signals before the shutdown.

11.4.4 Status of the beams

Overview

The **Status of the beams** page shows the current status of the light beams of the connected system. Interruptions of the light beams as well as error and warning messages are displayed. The status of the beams of guest devices in a cascade are displayed on the relevant subpage.

Prerequisites

- The system is connected to Safety Designer.

11.5 Diagnostics using the mobile app

Overview

You can use various functions with the SICK Safety Assistant app. You can read out diagnostic and configuration data, among other things, or use service functions.

Diagnostic data

The following diagnostic data can be displayed in an NFC-capable device:

- Overview (system setup and OSSD status of the overall system)
- Configuration
- Status of the beams (e.g., alignment quality, also for guest devices)
- Technical data (e.g., serial number and type code)
- Error history (error analysis with details of the error code, error description and troubleshooting)
- Shutdown analysis (list of the last shutdown reasons including beam data and the last signal changes before shutdown)

The device-specific information of the protective device can also be accessed when the device is switched off.

The error analysis can be sent directly to SICK by e-mail via the SICK Safety Assistant app.

To access the information for diagnostics and configuration, you need an NFC-enabled device, e.g., a smartphone and the SICK Safety Assistant app.

→ Hold the NFC-enabled device near the marked NFC-area on the lower end of the receiver to access the diagnostic data.

Complementary information

The SICK Safety Assistant app is available for devices with the following operating systems:

- Android
- iOS

Further topics

- "Service functions of the mobile app", page 190

11.6 Diagnostics via SOPAS ET

When configuring via the SP1/SP2 system plug, you can access the configuration data via IO-Link. You can use the SDD for SOPAS ET to display the diagnostic and configuration data transmitted via IO-Link.

12 Decommissioning

12.1 Disposal

Procedure

→ Always dispose of unusable devices in accordance with national waste disposal regulations.

Complementary information

SICK will be glad to help you dispose of these devices on request.

13 Technical data

13.1 Version numbers and functional scope

The following table describes technical changes or extensions to the functional scope on the sender and receiver made in the course of product maintenance.

We use a three-digit version number to identify the changes in functional scope. The change statuses are downward compatible with devices already in use.

The functional scope of the device is found at the following locations:

- On the type label: Field under the “Type” field
- In the SICK Safety Assistant app via NFC. In the diagnostic report:
  - Technical data (general system data)
  - Configuration (device information / functional scope)
- Via IO-Link in the ISDU of the respective device (DeviceIdent*): Field "HcsvMajor", "HcsvMinor", "HcsvRelease"
- Via IO-Link in the SDD for SOPAS ET
- On the "Overview" page in Safety Designer

Table 83: Version numbers and functional scope of the receiver

Version number	Amendments and new functions	Additional information
No version number (V 1.0.0)	Initial device version	
V 1.1.0	Supplement to the Smart Box Detectionfunction	"Smart Box Detection", page 61
V 1.2.0	• DMM4 extension module available • Configuration of existing functions is possible via software • Addition of the following functions via software configuration: ○ Reduced resolution (Basic) [1)] ○ Manual adjustment of the protective field width ○ Transmitting power adjustment ○ Configurable muting (incl. 4-signal muting and additional muting signals) ○ Smart restart interlock ○ Operating modes ○ Multiple sampling ○ Safety sensor inputs (SDI) ○ Advanced ADO functions	

Version number	Amendments and new functions	Additional information
V 1.3.0	**Addition of the following functions via software configuration:** • DCM4 extension module available • Addition of the following functions via software configuration: ○ Configurable Smart Box Detection ○ Reduced resolution (Basic) [2] ○ Reduced resolution (Advanced) ○ Object pattern recognition ○ Fixed and floating blanking ○ Extended ADO functions incl. virtual detection fields ○ Configurable area for the smart restart interlock	

1) The resolution of a device can be reduced by up to 2 beams.

2) The resolution of a device can be reduced by more than 2 beams.

Table 84: Version numbers and functional scope of the sender

Version number	Amendments and new functions	Additional information
No version number (V 1.0.0)	Initial device version	
V 1.1.0	• DMM4 extension module available • DCM4 extension module available • Configuration of existing functions is possible via software • Addition of the transmitting power adjustment function via software configuration	

13.2 Data sheet

Table 85: General system data

	Minimum	Typical	Maximum
Protective field height, depending on type	300 mm to 2,100 mm, 150 mm increments		
Resolution (detection capability), depending on type	14 mm or 30 mm		
Protective field width [1] [2] [3]			
Resolution 14 mm	0.15 m ... 16 m	0.15 m ... 20 m	
Resolution 30 mm	0 m ... 24 m	0 m ... 30 m	
Protection class [4]	III (IEC 61140)		
Enclosure rating [5]	IP65 (IEC 60529) IP67 (IEC 60529)		
Supply voltage U_V at the device [6] [7] [8]	19.2 V	24 V	28.8 V
Permissible current consumption of the entire system (system connection via system plug of a single device or the host device)			2 A
Permissible current consumption of the entire system (system connection via DMM4 extension module)			4 A
Permissible current consumption of the entire system (system connection via DCM4 extension module)			2.5 A
Residual ripple [9]			± 10%

	Minimum	Typical	Maximum
Response time	"Response time", page 238		
Synchronization	Optical		
Typ (IEC 61496)	Type 4		
Category (ISO 13849)	Category 4		
Performance level (ISO 13849) [10]	PL e		
Safety integrity level (IEC 61508) [10]	SIL 3		
Safety integrity level (IEC 62061) [10]	SIL 3		
PFH_D (average frequency of a dangerous failure per hour) [11] [12]			
Single system	1.53×10^{-8}		
Cascade with one guest	3.05×10^{-8}		
Cascade with two guest devices	4.56×10^{-8}		
T_M (mission time)	20 years (ISO 13849-1)		
Safe status when an error occurs	At least one OSSD is in the OFF state.		
Number of beams in the system	"Number of beams in the system", page 237		
Test rod speed at which the test rod is reliably detected [13]	0 m/s ... 1.6 m/s		
Muting parameters[14]			
Consecutive overrides	1	5	360
Sensor gap monitoring (muting signal and ESPE)	0.01 s	0.5 s	2 s
Muting end delay	0.01 s	0.2 s	1 s
Total time for Muting end by ESPE [15]	0.01 s	0.7 s	3 s
Muting hold time	0.5 s	4 s	4 s
Concurrence monitoring	0.1 s	24 h	24 h
Total muting time	10 s	24 h	24 h
Smart Box Detection parameters [14]			
Object speed	0.1 m/s		1 m/s
Object height h_{box}	134 mm		(Number of beams - 4) * 10 mm
Object width w_{box}	min. 10 mm ... 100 mm [16]		
Upper and lower object edge tolerance dY_{box} (object height)	At least 10 mm		
Lateral object edge tolerance dX_{box} (object width) [17]	min. 6 mm ... 60 mm (uncoded system) min. 4 mm ... 40 mm (coded system)		
Minimum distance from objects	min. 10 mm ... 100 mm [16]		
Total Smart Box Detection time	1 s	24 h	24 h
Consecutive Smart Box Detection Overrides	1	5	360
Time until release of "Smart Box Detection Override required"	1 s	5 s	255 s
Exit delay after object entry (scans)	0	0	255
Safety inputs (SDI)			
Duration of the LOW state at an input for safety sensors (SDI), which leads to the safe change of the OSSDs to the OFF state	6 ms		
Operating modes			
Tolerance time for operating mode change	20 ms	1,000 ms	2,000 ms
Parameters for object pattern recognition			
Object speed			2 m/s

	Minimum	Typical	Maximum
Object size			Protective field height - 150 mm
Number of objects	Depends on the protective field height and the configured reduced resolution, see "Number of objects", page 95		

1) If the protective fields are very wide, there is a possibility that all four diagnostic LEDs 1, 2, 3 and 4 will not light up even when alignment is optimal.
2) The minimum scanning range specifies a range in which a function is guaranteed to operate correctly and safely under industrial conditions. A sufficient level of signal reserve to ensure very high availability is included in the calculation.
3) The typical scanning range indicates a range in which the ESPE functions perfectly and reliably under industrial conditions. The level of signal reserve is enough to ensure high availability.
4) The system must be supplied with SELV/PELV in accordance with IEC 60204-1.
5) The specified enclosure rating only applies if the system plug is fitted and the protective cover for the DIP switches, which is attached to the SP2 system plug, is securely closed.
6) The external voltage supply must be capable of buffering brief power failures of 20 ms as specified in IEC 60204-1. Suitable power supply units are available as accessories from SICK.
7) A fuse rated maximum 4 A shall be installed in the 24 V DC power supply circuit to the device in order to limit the available current.
8) All inputs of the protective device must be supplied by the same voltage supply. If the sender and receiver are connected to each other, they must be supplied by the same voltage supply.
9) Within the limits of U_V.
10) For more detailed information on the exact configuration of your machine, please contact your relevant SICK subsidiary.
11) The values apply for an installation height of up to 2,000 m above sea level. Additional information can be found at your SICK subsidiary.
12) The specified values take into account the specified devices (sender and receiver) as well as the system plugs. Additional accessories are not included in the values.
Additional accessories and extension modules may have to be considered separately.
13) Direction of movement and axis of the test rod perpendicular to the protective field.
14) The minimum and maximum values specified correspond to the respective configuration range when configuring via software. The specified typical values refer to the preset fixed parameters for configuration via the system plugs.
15) The values apply for the time from when the ESPE becomes clear until the termination of muting and contain a sensor gap monitoring ESPE and a muting end delay.
16) The values depend on the object speed.
17) The values depend on the object speed and the set beam coding.

Table 86: Mechanical data

	deTec4 HG
Housing material	Aluminum extruded profile
Housing color	Anodized aluminum, similar to RAL 9005 (black) and RAL 1021 (colza yellow)
Front screen material	Chemically prestressed float glass
Weight	Depending on the protective field height, see "Table of weights", page 257

Table 87: Technical data for sender

	Minimum	Typical	Maximum
Wavelength of sender		850 nm (Near-infrared (NIR), invisible)	
Laser alignment aid			
Wavelength		650 nm (red)	

	Minimum	Typical	Maximum
Average output power			390 µW
Laser class	1		
Laser alignment aid switch input (In1)			
Input voltage HIGH (active)	13 V	24 V	30 V
Input current HIGH	2 mA	5 mA	7 mA
Input voltage LOW (deactivated)	–3 V	0 V	3 V
Input current LOW	–0.1 mA	0 mA	0.5 mA
Laser alignment aid pushbutton input (In2)			
Input voltage HIGH (active)	13 V	24 V	30 V
Input current HIGH	2 mA	5 mA	7 mA
Input voltage LOW (deactivated)	–3 V	0 V	3 V
Input current LOW	–0.1 mA	0 mA	0.5 mA
Control switch actuation time	65 ms		

Table 88: Technical data for receiver

	Minimum	Typical	Maximum
Output signal switching devices (OSSDs)	2 PNP semiconductors, short-circuit protected [1], cross-circuit monitored		
Duration of OFF state	100 ms		
Switch-on delay		3 × response time	
ON state, switching voltage HIGH (U_{eff}) [2]	U_V – 2.25 V	24 V	U_V
OFF state, switching voltage LOW [2] [3]	0 V	0 V	2.0 V
Current-carrying capacity of the OSSDs			500 mA each
Leakage current of the OSSDs			2 mA each
Load capacity			2.2 µF
Load inductance			2.2 H
Test pulse data [4]			
Test pulse width	130 µs	150 µs	300 µs
Test pulse rate	3 s^{-1}	5 s^{-1}	10 s^{-1}
Discrepancy time (time offset between switching of OSSD2 and OSSD1)			1 ms
Inputs			
Input voltage HIGH (active) [2]	11 V	24 V	30 V
Input current HIGH	6 mA	10 mA	15 mA
Input voltage LOW (deactivated) [2]	–3 V	0 V	5 V
Input current LOW	–2.5 mA	0 mA	2 mA
Input capacitance			15 nF
External device monitoring input (EDM)			
Connected contactors			
Permissible dropout time			300 ms
Permissible pull in time			300 ms
Reset, override, Smart Box Detection Override, teach-in for fixed blanking inputs			
Control switch actuation time	50 ms		60 s
Inputs for muting signals, supplementary signals for muting, belt stop			
Input filter		50 ms	
Muting signals			
Output type of the muting sensors	PNP switching		

	Minimum	Typical	Maximum
Current consumption of a muting sensor			50 mA
Supply voltage	U_v – 1 V		U_v
Application diagnostic outputs (ADO)	PNP semiconductor, short-circuit protected [1]		
Output voltage HIGH (active)	U_V – 3 V		U_V
Output voltage LOW (deactivated)		High resistance	
Current carrying capacity			100 mA each
Permissible cable resistance			
Cable resistance between the OSSD at the receiver (host) and load [5]			2.5 Ω

1) Applies to the voltage range between -30 V and +30 V.

12)) Compatible with type 1 and 3 digital inputs in accordance with IEC 61131-2.

2) Corresponding to digital inputs of types 1 and 3 according to IEC 61131-2.

3) The specified values are the switching voltage supplied by the safety light curtain. If higher voltages are implanted externally, the maximum value of 2.0 V can be exceeded.

4) When active, the outputs are tested cyclically (brief LOW). When selecting the downstream controllers, make sure that the test pulses do not result in deactivation when using the above parameters.

5) Limit the cable resistance of the individual wires to the specified value to ensure that the light curtain functions correctly, particularly that a cross-circuit between the outputs is safely detected. (Also observe IEC 60204-1.)
The specified value applies to the total resistance of each wire including contact and connector resistances and the cable to the sender when using a separate T-splitter.

Table 89: Operating data

	Minimum	Typical	Maximum
System connection	Male connector, M12, 5-pin Male connector, M12, 8-pin		
Length of cable	200 mm		
Cable diameter	5 mm		
Cable material of the system or extension connection	PUR		
Extension connection	Optional, female connector, M12, 5-pin		
Lengths of cable for connecting cables and in cascades	"Length of cable", page 254		
Lengths of cable for other cables on the extension connection			10 m
Ambient operating temperature [1] [2] [3]	–30 °C		+55 °C
Air humidity (non-condensing)	15%		95%
Storage temperature	–30 °C		+70 °C
Housing cross-section	31 mm × 34 mm, plus bracket, see "Dimensional drawings", page 258		
Vibration resistance [4]	5 ... 150 Hz, 3,5 mm / 1 g (EN 60068-2-6)		
Shock resistance [5]	15 g / 6 ms (EN 60068-2-27)		
Class	3M4 (IEC TR 60721-4-3)		

	Minimum	Typical	Maximum
EMC	According to IEC 61496-1, IEC 61000-6-2, IEC 61000-6-4		

1) The temperature difference between sender and receiver must not exceed 25 K.
2) The cable belonging to the device incl. the associated connector plug must not be flexibly mounted under –25° C.
3) Maximum ambient operating temperature over 1,000 m above sea level: +50 °C.
Maximum ambient operating temperature over 2,000 m above sea level: +45 °C.
4) Test conditions per axis: 1 octave/minute, 20 sweeps.
5) Test conditions per axis: 200 shocks.

13.3 Number of beams in the system

Overview

Only a limited number of beams can be used in one system. The maximum number depends on various parameters.

Calculating the number of beams for a device:

- Resolution 14 mm: protective field height/mm / 10 (example, protective field height 2100 mm: 2100/10 = 210 beams) [15)]
- Resolution 30 mm: protective field height/mm / 25 (example, protective field height 2100 mm: 2100/25 = 84 beams) [15)]

Maximum number of beams in the system

Table 90: Maximum number of beams for a standalone device

Beam coding	Resolution	Multiple sampling	Reduced resolution [1)]	Maximum number of beams
Uncoded	14 mm, 30 mm	2, 3, 4	Not relevant	No limitation
Code 1 or code 2	14 mm	2, 3	Not relevant	No limitation
		4	≤ 2	180
			> 2	165
	30 mm	2, 3, 4	Not relevant	No limitation

1) Maximum value of the reduced resolution (Basic or Advanced) for the devices of a cascaded system.

Table 91: Maximum number of beams in a cascade with one guest

Beam coding	Resolution	Multiple sampling	Reduced resolution [1)]	Maximum number of beams
Uncoded	14 mm, 30 mm	2, 3, 4	Not relevant	No limitation
Code 1 or code 2	14 mm (all devices)	2	≤ 2	375 [2)]
			> 2	375
		3	Not relevant	240
		4	Not relevant	165
	30 mm (at least one device)	2	Not relevant	No limitation
		3	≤ 2	240
			> 2	231
		4	≤ 2	166
			> 2	160

1) Maximum value of the reduced resolution (Basic or Advanced) for the devices of a cascaded system.
2) For receivers with functional scope V 1.2.0 or higher: 390.

15) The nominal protective field height is relevant for the calculation.

Table 92: Maximum number of beams in a cascade with two guest devices

Beam coding	Resolution	Multiple sampling	Reduced resolution [1]	Maximum number of beams
Uncoded	14 mm, 30 mm	2, 3	Not relevant	No limitation
		4	Not relevant	540
Code 1 or code 2	14 mm (all devices)	2	≤ 2	375 [2]
			> 2	375
		3	≤ 2	240
			> 2	225
		4	≤ 2	165
			> 2	150
	30 mm (at least one device)	2	≤ 2	375
			> 2	365
		3	≤ 2	232
			> 2	222
		4	≤ 2	159
			> 2	152

1) Maximum value of the reduced resolution (Basic or Advanced) for the devices of a cascaded system.

2) For receivers with functional scope V 1.2.0 or higher: 390.

13.4 Response time

Overview

In addition to the safety light curtain, the ESPE also offers inputs for safety sensors (SDI). Both protective devices have independent response times that need to be considered individually.

NOTE
The response time of the safety light curtain depends on whether the safety light curtain is used as a single system or in a cascade. The response time of the system must be determined differently depending on this.

NOTE
If different operating modes with different configurations are used, the highest response time must be taken into account.

Response time of the safety light curtain (single system)

The response time depends on various device properties and configuration settings.

NOTE
If the Smart Box Detection function is configured on the receiver with 14 mm resolution, a response time of 80 ms applies regardless of the protective field height and beam coding.

Table 93: Response time of a single device in ms with protective field height of 300 mm

Resolution	Beam coding	Floating blanking or reduced resolution (Advanced) [1]	Object pattern recognition	Multiple sampling	Reduced resolution (Basic) beams	Response time (ms)
14 mm	Uncoded	Inactive		2x	≤ 2	11
					> 2	12
				3x	≤ 2	15
					> 2	16
				4x	≤ 2	20
					> 2	21
		Active	Inactive	2x	Not relevant	12
				3x	Not relevant	17
				4x	Not relevant	22
		Inactive	Active	2x	Not relevant	Not allowed
	Code 1 or code 2	Inactive		2x	≤ 2	16
					> 2	19
				3x	≤ 2	23
					> 2	26
				4x	≤ 2	30
					> 2	33
		Active	Inactive	2x	Not relevant	20
				3x	Not relevant	27
				4x	Not relevant	34
		Inactive	Active	2x	Not relevant	Not allowed
30 mm	Uncoded	Inactive		2x	≤ 2	9
					> 2	10
				3x	≤ 2	14
					> 2	15
				4x	≤ 2	18
					> 2	19
		Active	Inactive	2x	Not relevant	10
				3x	Not relevant	15
				4x	Not relevant	19
		Inactive	Active	2x	Not relevant	Not allowed
	Code 1 or code 2	Inactive		2x	≤ 2	12
					> 2	13
				3x	≤ 2	18
					> 2	19
				4x	≤ 2	23
					> 2	24
		Active	Inactive	2x	Not relevant	14
				3x	Not relevant	20
				4x	Not relevant	25
		Inactive	Active	2x	Not relevant	Not allowed

1) If floating blanking is not configured and reduced resolution (Advanced) is configured with the **Reduce multiple sampling to improve response time** option, then the response time is the value from the "Inactive" line.

Table 94: Response time of a single device in ms with protective field height of 450 mm

Resolution	Beam coding	Floating blanking or reduced resolution (Advanced) [1]	Object pattern recognition	Multiple sampling	Reduced resolution (Basic) beams	Response time (ms)
14 mm	Uncoded	Inactive		2x	≤ 2	12
					> 2	13
				3x	≤ 2	17
					> 2	18
				4x	≤ 2	22
					> 2	23
		Active	Inactive	2x	Not relevant	14
				3x	Not relevant	19
				4x	Not relevant	24
		Inactive	Active	2x	Not relevant	Not allowed
	Code 1 or code 2	Inactive		2x	≤ 2	19
					> 2	22
				3x	≤ 2	28
					> 2	31
				4x	≤ 2	36
					> 2	39
		Active	Inactive	2x	Not relevant	24
				3x	Not relevant	33
				4x	Not relevant	41
		Inactive	Active	2x	Not relevant	Not allowed
30 mm	Uncoded	Inactive		2x	≤ 2	10
					> 2	11
				3x	≤ 2	14
					> 2	15
				4x	≤ 2	19
					> 2	20
		Active	Inactive	2x	Not relevant	11
				3x	Not relevant	15
				4x	Not relevant	20
		Inactive	Active	2x	Not relevant	Not allowed
	Code 1 or code 2	Inactive		2x	≤ 2	14
					> 2	15
				3x	≤ 2	20
					> 2	21
				4x	≤ 2	26
					> 2	27
		Active	Inactive	2x	Not relevant	16
				3x	Not relevant	22
				4x	Not relevant	28
		Inactive	Active	2x	Not relevant	Not allowed

1) If floating blanking is not configured and reduced resolution (Advanced) is configured with the **Reduce multiple sampling to improve response time** option, then the response time is the value from the "Inactive" line.

Table 95: Response time of a single device in ms for protective field height 600 mm

Resolution	Beam coding	Floating blanking or reduced resolution (Advanced) [1]	Object pattern recognition	Multiple sampling	Reduced resolution (Basic) beams	Response time (ms)
14 mm	Uncoded	Inactive		2x	≤ 2	13
					> 2	14
				3x	≤ 2	18
					> 2	19
				4x	≤ 2	24
					> 2	25
		Active	Inactive	2x	Not relevant	15
				3x	Not relevant	21
				4x	Not relevant	27
		Inactive	Active	2x	Not relevant	Not allowed
	Code 1 or code 2	Inactive		2x	≤ 2	22
					> 2	25
				3x	≤ 2	32
					> 2	35
				4x	≤ 2	42
					> 2	45
		Active	Inactive	2x	Not relevant	28
				3x	Not relevant	39
				4x	Not relevant	49
		Inactive	Active	2x	Not relevant	Not allowed
30 mm	Uncoded	Inactive		2x	≤ 2	10
					> 2	11
				3x	≤ 2	15
					> 2	16
				4x	≤ 2	20
					> 2	21
		Active	Inactive	2x	Not relevant	12
				3x	Not relevant	16
				4x	Not relevant	21
		Inactive	Active	2x	Not relevant	Not allowed
	Code 1 or code 2	Inactive		2x	≤ 2	15
					> 2	16
				3x	≤ 2	21
					> 2	22
				4x	≤ 2	28
					> 2	29
		Active	Inactive	2x	Not relevant	18
				3x	Not relevant	24
				4x	Not relevant	31
		Inactive	Active	2x	Not relevant	Not allowed

1) If floating blanking is not configured and reduced resolution (Advanced) is configured with the **Reduce multiple sampling to improve response time** option, then the response time is the value from the "Inactive" line.

Table 96: Response time of a single device in ms for protective field height 750 mm

Resolution	Beam coding	Floating blanking or reduced resolution (Advanced) [1]	Object pattern recognition	Multiple sampling	Reduced resolution (Basic) beams	Response time (ms)
14 mm	Uncoded	Inactive		2x	≤ 2	13
					> 2	14
				3x	≤ 2	20
					> 2	21
				4x	≤ 2	26
					> 2	27
		Active	Inactive	2x	Not relevant	16
				3x	Not relevant	23
				4x	Not relevant	29
		Inactive	Active	2x	Not relevant	16
	Code 1 or code 2	Inactive		2x	≤ 2	25
					> 2	28
				3x	≤ 2	36
					> 2	39
				4x	≤ 2	48
					> 2	51
		Active	Inactive	2x	Not relevant	33
				3x	Not relevant	44
				4x	Not relevant	56
		Inactive	Active	2x	Not relevant	33
30 mm	Uncoded	Inactive		2x	≤ 2	11
					> 2	12
				3x	≤ 2	15
					> 2	16
				4x	≤ 2	20
					> 2	21
		Active	Inactive	2x	Not relevant	12
				3x	Not relevant	17
				4x	Not relevant	22
		Inactive	Active	2x	Not relevant	12
	Code 1 or code 2	Inactive		2x	≤ 2	16
					> 2	17
				3x	≤ 2	23
					> 2	24
				4x	≤ 2	30
					> 2	31
		Active	Inactive	2x	Not relevant	20
				3x	Not relevant	27
				4x	Not relevant	34
		Inactive	Active	2x	Not relevant	20

1) If floating blanking is not configured and reduced resolution (Advanced) is configured with the **Reduce multiple sampling to improve response time** option, then the response time is the value from the "Inactive" line.

Table 97: Response time of a single device in ms for protective field height 900 mm

Resolution	Beam coding	Floating blanking or reduced resolution (Advanced) [1]	Object pattern recognition	Multiple sampling	Reduced resolution (Basic) beams	Response time (ms)
14 mm	Uncoded	Inactive		2x	≤ 2	14
					> 2	15
				3x	≤ 2	21
					> 2	22
				4x	≤ 2	28
					> 2	29
		Active	Inactive	2x	Not relevant	18
				3x	Not relevant	25
				4x	Not relevant	31
		Inactive	Active	2x	Not relevant	18
	Code 1 or code 2	Inactive		2x	≤ 2	28
					> 2	31
				3x	≤ 2	41
					> 2	44
				4x	≤ 2	54
					> 2	57
		Active	Inactive	2x	Not relevant	37
				3x	Not relevant	50
				4x	Not relevant	63
		Inactive	Active	2x	Not relevant	37
30 mm	Uncoded	Inactive		2x	≤ 2	11
					> 2	12
				3x	≤ 2	16
					> 2	17
				4x	≤ 2	21
					> 2	22
		Active	Inactive	2x	Not relevant	13
				3x	Not relevant	18
				4x	Not relevant	23
		Inactive	Active	2x	Not relevant	13
	Code 1 or code 2	Inactive		2x	≤ 2	17
					> 2	18
				3x	≤ 2	25
					> 2	26
				4x	≤ 2	33
					> 2	34
		Active	Inactive	2x	Not relevant	21
				3x	Not relevant	29
				4x	Not relevant	37
		Inactive	Active	2x	Not relevant	21

1) If floating blanking is not configured and reduced resolution (Advanced) is configured with the **Reduce multiple sampling to improve response time** option, then the response time is the value from the "Inactive" line.

Table 98: Response time of a single device in ms for protective field height 1050 mm

Resolution	Beam coding	Floating blanking or reduced resolution (Advanced) [1]	Object pattern recognition	Multiple sampling	Reduced resolution (Basic) beams	Response time (ms)
14 mm	Uncoded	Inactive		2x	≤ 2	15
					> 2	16
				3x	≤ 2	23
					> 2	24
				4x	≤ 2	30
					> 2	31
		Active	Inactive	2x	Not relevant	19
				3x	Not relevant	26
				4x	Not relevant	34
		Inactive	Active	2x	Not relevant	19
	Code 1 or code 2	Inactive		2x	≤ 2	31
					> 2	34
				3x	≤ 2	45
					> 2	48
				4x	≤ 2	60
					> 2	63
		Active	Inactive	2x	Not relevant	42
				3x	Not relevant	56
				4x	Not relevant	71
		Inactive	Active	2x	Not relevant	42
30 mm	Uncoded	Inactive		2x	≤ 2	11
					> 2	12
				3x	≤ 2	17
					> 2	18
				4x	≤ 2	22
					> 2	23
		Active	Inactive	2x	Not relevant	13
				3x	Not relevant	18
				4x	Not relevant	24
		Inactive	Active	2x	Not relevant	13
	Code 1 or code 2	Inactive		2x	≤ 2	18
					> 2	19
				3x	≤ 2	27
					> 2	28
				4x	≤ 2	35
					> 2	36
		Active	Inactive	2x	Not relevant	23
				3x	Not relevant	32
				4x	Not relevant	40
		Inactive	Active	2x	Not relevant	23

1) If floating blanking is not configured and reduced resolution (Advanced) is configured with the **Reduce multiple sampling to improve response time** option, then the response time is the value from the "Inactive" line.

Table 99: Response time of a single device in ms with protective field height of 1,200 mm

Resolution	Beam coding	Floating blanking or reduced resolution (Advanced) [1]	Object pattern recognition	Multiple sampling	Reduced resolution (Basic) beams	Response time (ms)
14 mm	Uncoded	Inactive		2x	≤ 2	16
					> 2	17
				3x	≤ 2	24
					> 2	25
				4x	≤ 2	32
					> 2	33
		Active	Inactive	2x	Not relevant	21
				3x	Not relevant	28
				4x	Not relevant	36
		Inactive	Active	2x	Not relevant	21
	Code 1 or code 2	Inactive		2x	≤ 2	34
					> 2	37
				3x	≤ 2	50
					> 2	53
				4x	≤ 2	66
					> 2	69
		Active	Inactive	2x	Not relevant	46
				3x	Not relevant	62
				4x	Not relevant	78
		Inactive	Active	2x	Not relevant	46
30 mm	Uncoded	Inactive		2x	≤ 2	12
					> 2	13
				3x	≤ 2	17
					> 2	18
				4x	≤ 2	23
					> 2	24
		Active	Inactive	2x	Not relevant	14
				3x	Not relevant	19
				4x	Not relevant	25
		Inactive	Active	2x	Not relevant	14
	Code 1 or code 2	Inactive		2x	≤ 2	20
					> 2	21
				3x	≤ 2	28
					> 2	29
				4x	≤ 2	37
					> 2	38
		Active	Inactive	2x	Not relevant	25
				3x	Not relevant	34
				4x	Not relevant	43
		Inactive	Active	2x	Not relevant	25

1) If floating blanking is not configured and reduced resolution (Advanced) is configured with the **Reduce multiple sampling to improve response time** option, then the response time is the value from the "Inactive" line.

Table 100: Response time of a single device in ms for protective field height 1350 mm

Resolution	Beam coding	Floating blanking or reduced resolution (Advanced) [1]	Object pattern recognition	Multiple sampling	Reduced resolution (Basic) beams	Response time (ms)
14 mm	Uncoded	Inactive		2x	≤ 2	17
					> 2	18
				3x	≤ 2	25
					> 2	26
				4x	≤ 2	34
					> 2	35
		Active	Inactive	2x	Not relevant	22
				3x	Not relevant	30
				4x	Not relevant	38
		Inactive	Active	2x	Not relevant	22
	Code 1 or code 2	Inactive		2x	≤ 2	37
					> 2	40
				3x	≤ 2	54
					> 2	57
				4x	≤ 2	72
					> 2	75
		Active	Inactive	2x	Not relevant	51
				3x	Not relevant	68
				4x	Not relevant	86
		Inactive	Active	2x	Not relevant	51
30 mm	Uncoded	Inactive		2x	≤ 2	12
					> 2	13
				3x	≤ 2	18
					> 2	19
				4x	≤ 2	23
					> 2	24
		Active	Inactive	2x	Not relevant	14
				3x	Not relevant	20
				4x	Not relevant	26
		Inactive	Active	2x	Not relevant	14
	Code 1 or code 2	Inactive		2x	≤ 2	21
					> 2	22
				3x	≤ 2	30
					> 2	31
				4x	≤ 2	40
					> 2	41
		Active	Inactive	2x	Not relevant	27
				3x	Not relevant	36
				4x	Not relevant	46
		Inactive	Active	2x	Not relevant	27

1) If floating blanking is not configured and reduced resolution (Advanced) is configured with the **Reduce multiple sampling to improve response time** option, then the response time is the value from the "Inactive" line.

Table 101: Response time of a single device in ms for protective field height 1500 mm

Resolution	Beam coding	Floating blanking or reduced resolution (Advanced) [1]	Object pattern recognition	Multiple sampling	Reduced resolution (Basic) beams	Response time (ms)
14 mm	Uncoded	Inactive		2x	≤ 2	18
					> 2	19
				3x	≤ 2	27
					> 2	28
				4x	≤ 2	36
					> 2	37
		Active	Inactive	2x	Not relevant	24
				3x	Not relevant	32
				4x	Not relevant	41
		Inactive	Active	2x	Not relevant	24
	Code 1 or code 2	Inactive		2x	≤ 2	40
					> 2	43
				3x	≤ 2	58
					> 2	61
				4x	≤ 2	77
					> 2	80
		Active	Inactive	2x	Not relevant	55
				3x	Not relevant	74
				4x	Not relevant	93
		Inactive	Active	2x	Not relevant	55
30 mm	Uncoded	Inactive		2x	≤ 2	13
					> 2	14
				3x	≤ 2	18
					> 2	19
				4x	≤ 2	24
					> 2	25
		Active	Inactive	2x	Not relevant	15
				3x	Not relevant	21
				4x	Not relevant	27
		Inactive	Active	2x	Not relevant	15
	Code 1 or code 2	Inactive		2x	≤ 2	22
					> 2	23
				3x	≤ 2	32
					> 2	33
				4x	≤ 2	42
					> 2	43
		Active	Inactive	2x	Not relevant	28
				3x	Not relevant	39
				4x	Not relevant	49
		Inactive	Active	2x	Not relevant	28

1) If floating blanking is not configured and reduced resolution (Advanced) is configured with the **Reduce multiple sampling to improve response time** option, then the response time is the value from the "Inactive" line.

Table 102: Response time of a single device in ms for protective field height 1650 mm

Resolution	Beam coding	Floating blanking or reduced resolution (Advanced) [1]	Object pattern recognition	Multiple sampling	Reduced resolution (Basic) beams	Response time (ms)
14 mm	Uncoded	Inactive		2x	≤ 2	19
					> 2	20
				3x	≤ 2	28
					> 2	29
				4x	≤ 2	37
					> 2	38
		Active	Inactive	2x	Not relevant	25
				3x	Not relevant	34
				4x	Not relevant	43
		Inactive	Active	2x	Not relevant	25
	Code 1 or code 2	Inactive		2x	≤ 2	42
					> 2	45
				3x	≤ 2	63
					> 2	66
				4x	≤ 2	83
					> 2	86
		Active	Inactive	2x	Not relevant	59
				3x	Not relevant	80
				4x	Not relevant	100
		Inactive	Active	2x	Not relevant	59
30 mm	Uncoded	Inactive		2x	≤ 2	13
					> 2	14
				3x	≤ 2	19
					> 2	20
				4x	≤ 2	25
					> 2	26
		Active	Inactive	2x	Not relevant	16
				3x	Not relevant	21
				4x	Not relevant	27
		Inactive	Active	2x	Not relevant	16
	Code 1 or code 2	Inactive		2x	≤ 2	23
					> 2	24
				3x	≤ 2	34
					> 2	35
				4x	≤ 2	45
					> 2	46
		Active	Inactive	2x	Not relevant	30
				3x	Not relevant	41
				4x	Not relevant	52
		Inactive	Active	2x	Not relevant	30

1) If floating blanking is not configured and reduced resolution (Advanced) is configured with the **Reduce multiple sampling to improve response time** option, then the response time is the value from the "Inactive" line.

Table 103: Response time of a single device in ms for protective field height 1800 mm

Resolution	Beam coding	Floating blanking or reduced resolution (Advanced) [1]	Object pattern recognition	Multiple sampling	Reduced resolution (Basic) beams	Response time (ms)
14 mm	Uncoded	Inactive		2x	≤ 2	20
					> 2	21
				3x	≤ 2	30
					> 2	31
				4x	≤ 2	39
					> 2	40
		Active	Inactive	2x	Not relevant	26
				3x	Not relevant	36
				4x	Not relevant	46
		Inactive	Active	2x	Not relevant	26
	Code 1 or code 2	Inactive		2x	≤ 2	45
					> 2	48
				3x	≤ 2	67
					> 2	70
				4x	≤ 2	89
					> 2	Not allowed
		Active	Inactive	2x	Not relevant	64
				3x	Not relevant	86
				4x	Not relevant	108
		Inactive	Active	2x	Not relevant	64
30 mm	Uncoded	Inactive		2x	≤ 2	13
					> 2	14
				3x	≤ 2	19
					> 2	20
				4x	≤ 2	26
					> 2	27
		Active	Inactive	2x	Not relevant	16
				3x	Not relevant	22
				4x	Not relevant	28
		Inactive	Active	2x	Not relevant	16
	Code 1 or code 2	Inactive		2x	≤ 2	24
					> 2	25
				3x	≤ 2	36
					> 2	37
				4x	≤ 2	47
					> 2	48
		Active	Inactive	2x	Not relevant	32
				3x	Not relevant	43
				4x	Not relevant	55
		Inactive	Active	2x	Not relevant	32

1) If floating blanking is not configured and reduced resolution (Advanced) is configured with the **Reduce multiple sampling to improve response time** option, then the response time is the value from the "Inactive" line.

Table 104: Response time of a single device in ms for protective field height 1950 mm

Resolution	Beam coding	Floating blanking or reduced resolution (Advanced) [1]	Object pattern recognition	Multiple sampling	Reduced resolution (Basic) beams	Response time (ms)
14 mm	Uncoded	Inactive		2x	≤ 2	21
					> 2	22
				3x	≤ 2	31
					> 2	32
				4x	≤ 2	41
					> 2	42
		Active	Inactive	2x	Not relevant	28
				3x	Not relevant	38
				4x	Not relevant	48
		Inactive	Active	2x	Not relevant	28
	Code 1 or code 2	Inactive		2x	≤ 2	48
					> 2	51
				3x	≤ 2	72
					> 2	75
				4x	Not relevant	Not allowed
		Active	Inactive	2x	Not relevant	68
				3x	Not relevant	92
				4x	Not relevant	Not allowed
		Inactive	Active	2x	Not relevant	68
30 mm	Uncoded	Inactive		2x	≤ 2	14
					> 2	15
				3x	≤ 2	20
					> 2	21
				4x	≤ 2	26
					> 2	27
		Active	Inactive	2x	Not relevant	17
				3x	Not relevant	23
				4x	Not relevant	29
		Inactive	Active	2x	Not relevant	17
	Code 1 or code 2	Inactive		2x	≤ 2	25
					> 2	26
				3x	≤ 2	37
					> 2	38
				4x	≤ 2	49
					> 2	50
		Active	Inactive	2x	Not relevant	34
				3x	Not relevant	46
				4x	Not relevant	58
		Inactive	Active	2x	Not relevant	34

1) If floating blanking is not configured and reduced resolution (Advanced) is configured with the **Reduce multiple sampling to improve response time** option, then the response time is the value from the "Inactive" line.

Table 105: Response time of a single device in ms for protective field height 2100 mm

Resolution	Beam coding	Floating blanking or reduced resolution (Advanced) [1]	Object pattern recognition	Multiple sampling	Reduced resolution (Basic) beams	Response time (ms)
14 mm	Uncoded	Inactive		2x	≤ 2	22
					> 2	23
				3x	≤ 2	33
					> 2	34
				4x	≤ 2	43
					> 2	44
		Active	Inactive	2x	Not relevant	29
				3x	Not relevant	40
				4x	Not relevant	50
		Inactive	Active	2x	Not relevant	29
	Code 1 or code 2	Inactive		2x	≤ 2	51
					> 2	54
				3x	≤ 2	76
					> 2	79
				4x	Not relevant	Not allowed
		Active	Inactive	2x	Not relevant	73
				3x	Not relevant	97
				4x	Not relevant	Not allowed
		Inactive	Active	2x	Not relevant	73
30 mm	Uncoded	Inactive		2x	≤ 2	14
					> 2	15
				3x	≤ 2	21
					> 2	22
				4x	≤ 2	27
					> 2	28
		Active	Inactive	2x	Not relevant	17
				3x	Not relevant	24
				4x	Not relevant	30
		Inactive	Active	2x	Not relevant	17
	Code 1 or code 2	Inactive		2x	≤ 2	27
					> 2	28
				3x	≤ 2	39
					> 2	40
				4x	≤ 2	52
					> 2	53
		Active	Inactive	2x	Not relevant	35
				3x	Not relevant	48
				4x	Not relevant	60
		Inactive	Active	2x	Not relevant	35

1) If floating blanking is not configured and reduced resolution (Advanced) is configured with the **Reduce multiple sampling to improve response time** option, then the response time is the value from the "Inactive" line.

Response time of the safety light curtain (cascade of two devices)

To calculate the response time of the safety light curtain, you need to add the response times of the individual devices (see table 93 to see table 105) and also take the configured multiple sampling into account.

→ Calculate the response time of the cascade using the following formula:
$t_C = t_H + t_{G1} - t_M$
Where:
- t_C = Response time of the cascade
- t_H = Response time of the device used as host
- t_{G1} = Response time of the device used as guest 1
- t_M = Deduction depending on the configured multiple sampling
  - Multiple sampling 2 (factory setting): 0 ms
  - Multiple sampling 3: 3 ms
  - Multiple sampling 4: 6 ms

✔ The calculated response time t_C can be used for each protective field interruption in the cascade.

✔ If only the response time for a protective field interruption at the host is to be taken into account, the calculated response time t_C can be reduced by 6 ms.

Response time of the safety light curtain (cascade of three devices)

To calculate the response time of the safety light curtain, you need to add the response times of the individual devices (see table 93 to see table 105) and also take the configured multiple sampling into account.

→ Calculate the response time of the cascade using the following formula:
$t_C = t_H + t_{G1} + t_{G2} - t_M$
Where:
- t_C = Response time of the cascade
- t_H = Response time of the device used as host
- t_{G1} = Response time of the device used as guest 1
- t_{G2} = Response time of the device used as guest 2
- t_M = Deduction depending on the configured multiple sampling
  - Multiple sampling 2 (factory setting): 0 ms
  - Multiple sampling 3: 6 ms
  - Multiple sampling 4: 12 ms

✔ The calculated response time t_C can be used for each protective field interruption in the cascade.

✔ If only the response time for a protective field interruption at the host is to be taken into account, the calculated response time t_C can be reduced by 12 ms.

✔ If only the response time for a protective field interruption at guest 1 is to be taken into account, the calculated response time t_C can be reduced by 6 ms.

Response time for SDI

A general response time of 50 ms applies to the additional inputs for safety sensors (SDI) of the DMM4 extension module.

The response time of the connected safety sensor must also be taken into account.

If contacts are connected to the input instead of safety sensors, the bounce time of the contacts must also be taken into account.

13.5 Tolerance times

Unless otherwise specified, the tolerance times shown refer to the associated configured values (or fixed parameters). The tolerance range between the minimum and maximum values indicates the respective switching range. The behavior is defined accordingly for switchover times outside the tolerance range.

Table 106: Muting tolerance times

	Minimum	Typical	Maximum
Muting end delay			
Muting end delay (muting end through muting signals, connection to the ESPE)			One sensor deactivated: + configured sensor gap monitoring (muting signal) + 64 ms Two sensors deactivated: + configured sensor gap monitoring (muting signal) + 60 ms
Muting end delay (muting end through muting signals, connection to the extension module)			One sensor deactivated: + configured sensor gap monitoring (muting signal) + 104 ms Two sensors deactivated: + configured sensor gap monitoring (muting signal) + 100 ms
Muting end delay (Muting end by ESPE)			+ configured sensor gap monitoring (ESPE) + muting end delay + 110 ms
Muting hold time			
Tolerance for muting hold time (connection to the ESPE)	+ 45 ms		+ 60 ms
Tolerance for muting hold time (connection to extension module)	+ 50 ms		+ 105 ms
Sensor gap monitoring			
Tolerance for sensor gap monitoring (muting sensor, connection to the ESPE)	– 7 ms		+ 10 ms
Tolerance for sensor gap monitoring (muting sensor, connection to extension module)	– 42 ms		+ 45 ms
Tolerance for sensor gap monitoring (ESPE)			
Multiple sampling 2 scans	+ 15 ms		+ 80 ms
Multiple sampling 3 scans	– 10 ms		+ 55 ms
Multiple sampling 4 scans	– 35 ms		+ 30 ms

Table 107: Tolerance time for operating mode change

	Minimum	Typical	Maximum
Tolerance for monitoring the maximum switchover time depending on the connection used for the operating modes			
Extension module	+ 5 ms		+ 55 ms
IO-Link on the host or single device	+ 2 ms		+ 8 ms
IO-Link on the guest	+ 5 ms		+ 55 ms

13.6 Power consumption

Table 108: Power consumption of sender and receiver (resolution 14 mm)

Protective field height in mm	Typical power consumption for sender in W	Maximum power consumption of sender in W	Typical power consumption of receiver in W [1)2)]	Maximum power consumption of receiver in W [1)2)]
300	1.5	1.8	3.5	4.4
450	1.6	1.9	3.7	4.6
600	1.6	2.0	3.8	4.8
750	1.7	2.1	4.0	5.0
900	1.8	2.2	4.2	5.2
1050	1.9	2.3	4.3	5.4
1200	2.0	2.4	4.5	5.6
1350	2.1	2.5	4.7	5.8
1500	2.2	2.6	4.9	6.1
1650	2.2	2.7	5.0	6.3
1800	2.3	2.8	5.2	6.5
1950	2.4	2.9	5.4	6.7
2100	2.5	3.0	5.5	6.9

1) Power discharged again via the OSSDs depending on the connected OSSD load must be added to the table values. The power consumption of connected loads and accessories must also be added to the table values.

2) The power consumption increases by 0.5 W with the use of a receiver with integrated LED.

Table 109: Power consumption of sender and receiver (resolution 30 mm)

Protective field height in mm	Typical power consumption for sender in W	Maximum power consumption of sender in W	Typical power consumption for receiver in W [1)2)]	Maximum power consumption of receiver in W [1)2)]
300	1.3	1.5	3.3	4.1
450	1.4	1.6	3.4	4.2
600	1.4	1.7	3.4	4.3
750	1.5	1.8	3.5	4.4
900	1.6	1.9	3.6	4.4
1050	1.7	2.0	3.6	4.5
1200	1.7	2.1	3.7	4.6
1350	1.8	2.1	3.8	4.7
1500	1.9	2.2	3.8	4.8
1650	1.9	2.3	3.9	4.9
1800	2.0	2.4	4.0	5.0
1950	2.1	2.5	4.0	5.0
2100	2.2	2.6	4.1	5.1

1) Power discharged again via the OSSDs depending on the connected OSSD load must be added to the table values. The power consumption of connected loads and accessories must also be added to the table values.

2) The power consumption increases by 0.5 W with the use of a receiver with integrated LED.

13.7 Length of cable

Overview

For typical applications, you can select the cable lengths according to the values given in the tables. If your application is not covered by the typical applications, you must calculate the maximum cable lengths taking the listed conditions into account.

Typical applications

The following tables show the permissible cable lengths for typical applications in which the current consumption of the overall system is a maximum of 2 A.

The tables take into consideration the cables from the control cabinet to the individual devices. When determining the required cable lengths, the length of the cables between the control cabinet and the load may also need to be taken into account. The cable resistance between the OSSD at the receiver (host) and the load, including the cable to the sender when using a separate T-splitter, must not exceed the value specified in the data sheet.

Table 110: Maximum lengths of cable for conductor cross section 0.34 mm², copper wire

	Single system	Cascade with 1 guest	Cascade with 2 guest devices
Separate connecting cables for sender and receiver	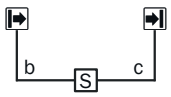 b ≤ 80 m c ≤ 30 m b + c ≤ 100 m	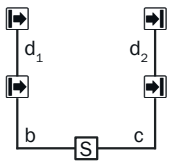 b ≤ 80 m c ≤ 30 m d_1, d_2 ≤ 7 m b + c ≤ 100 m	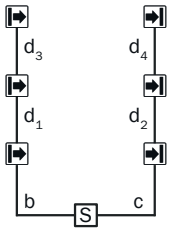 b ≤ 80 m c ≤ 20 m d_1, d_2, d_3, d_4 ≤ 5 m
Connection of sender and receiver via T-connector on the sender	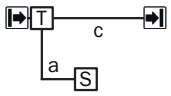 a ≤ 10 m c ≤ 25 m	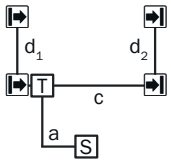 a ≤ 12 m c ≤ 16 m d_1, d_2 ≤ 5 m	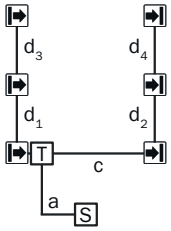 a ≤ 10 m c ≤ 10 m d_1, d_2, d_3, d_4 ≤ 3 m
connection of sender and receiver via T-connector on the receiver	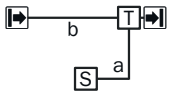 a ≤ 20 m b ≤ 80 m	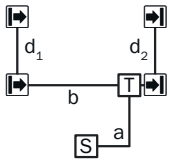 a ≤ 20 m b ≤ 30 m d_1, d_2 ≤ 5 m	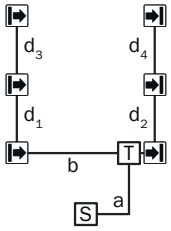 a ≤ 14 m b ≤ 30 m d_1, d_2, d_3, d_4 ≤ 3 m

S Control cabinet with safety relay or safety controller

T T-connector

Table 111: Maximum lengths of cable for conductor cross section 0.25 mm², copper cable

	Single system	Cascade with 1 guest	Cascade with 2 guest devices
Separate connecting cables for sender and receiver	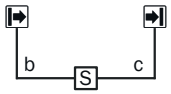 b ≤ 80 m c ≤ 25 m b + c ≤ 100 m	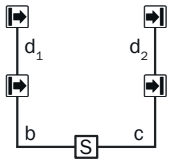 b ≤ 50 m c ≤ 22 m d_1, d_2 ≤ 7 m	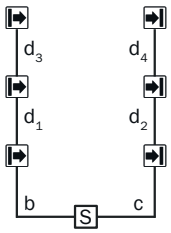 b ≤ 50 m c ≤ 14 m d_1, d_2, d_3, d_4 ≤ 5 m
Connection of sender and receiver via T-connector on the sender	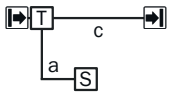 a ≤ 10 m c ≤ 15 m	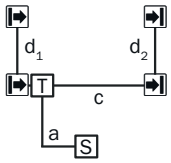 a ≤ 10 m c ≤ 10 m d_1, d_2 ≤ 5 m	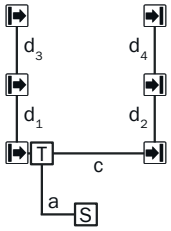 a ≤ 6 m c ≤ 9 m d_1, d_2, d_3, d_4 ≤ 3 m
connection of sender and receiver via T-connector on the receiver	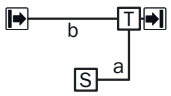 a ≤ 15 m b ≤ 80 m	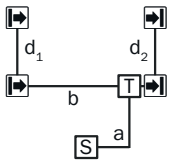 a ≤ 14 m b ≤ 30 m d_1, d_2 ≤ 5 m	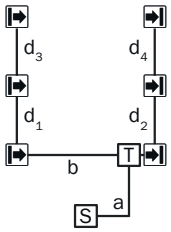 a ≤ 10 m b ≤ 22 m d_1, d_2, d_3, d_4 ≤ 3 m

S Control cabinet with safety relay or safety controller

T T-connector

Table 112: Maximum cable lengths for applications with the DMM4 extension module, copper cable

Single system	Cascade with 2 guest devices
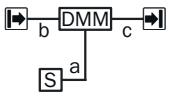 b ≤ 30 m c ≤ 10 m a + c ≤ 14 m	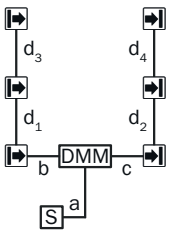 b ≤ 13 m c ≤ 10 m a + c ≤ 12 m d_1, d_2, d_3, d_4 ≤ 3 m

S Control cabinet with safety relay or safety controller

Table 113: Maximum cable lengths for applications with the DCM4 extension module, copper cable

Single system	Cascade with 2 guest devices
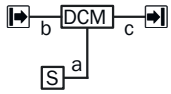 b ≤ 30 m c ≤ 10 m a + c ≤ 19 m	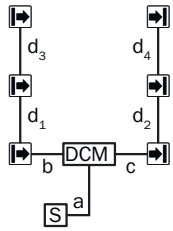 b ≤ 14 m c ≤ 10 m a + c ≤ 12 m d_1, d_2, d_3, d_4 ≤ 3 m

S Control cabinet with safety relay or safety controller

Other applications

For other applications (e.g., higher current consumption), the following conditions must be taken into account when calculating the cable lengths:

- Maximum cable lengths for individual connections:
  - Connection from receiver to extension module: 10 m
  - Connection from sender to extension module: 100 m
  - Connection from sender to receiver: 100 m
  - Connection of receivers in a cascade (host to guest 1 or guest 1 to guest 2): 10 m
  - Connection of senders in a cascade (host to guest 1 or guest 1 to guest 2): 10 m
- The maximum lengths of cable specified in the typical applications for the connecting cables from the receiver to the control cabinet, including the cable to the sender when using a separate T-splitter, must not be exceeded.
- Maximum permissible cable resistance between the OSSD at the receiver (host) and load, including the cable to the sender when using a separate T-splitter: 2.5 Ω
- Minimum supply voltage on all devices in the system: 19.2 V
- Maximum permissible potential difference between the 0 V connections on the receiver (host) and the 0 V on the OSSD load: 2 V

13.8 Table of weights

Table 114: Weight of sender and receiver

Protective field height in mm	Weight in g [1]	
	Sender	Receiver
300	230	240
450	370	380
600	510	520
750	640	650
900	780	790
1050	910	920
1200	1050	1060
1350	1180	1190
1500	1320	1330
1650	1450	1460
1800	1590	1600
1950	1730	1740

Protective field height in mm	Weight in g [1]	
	Sender	Receiver
2100	1860	1870

[1] Tolerance: ± 50 g.

13.9 Dimensional drawings

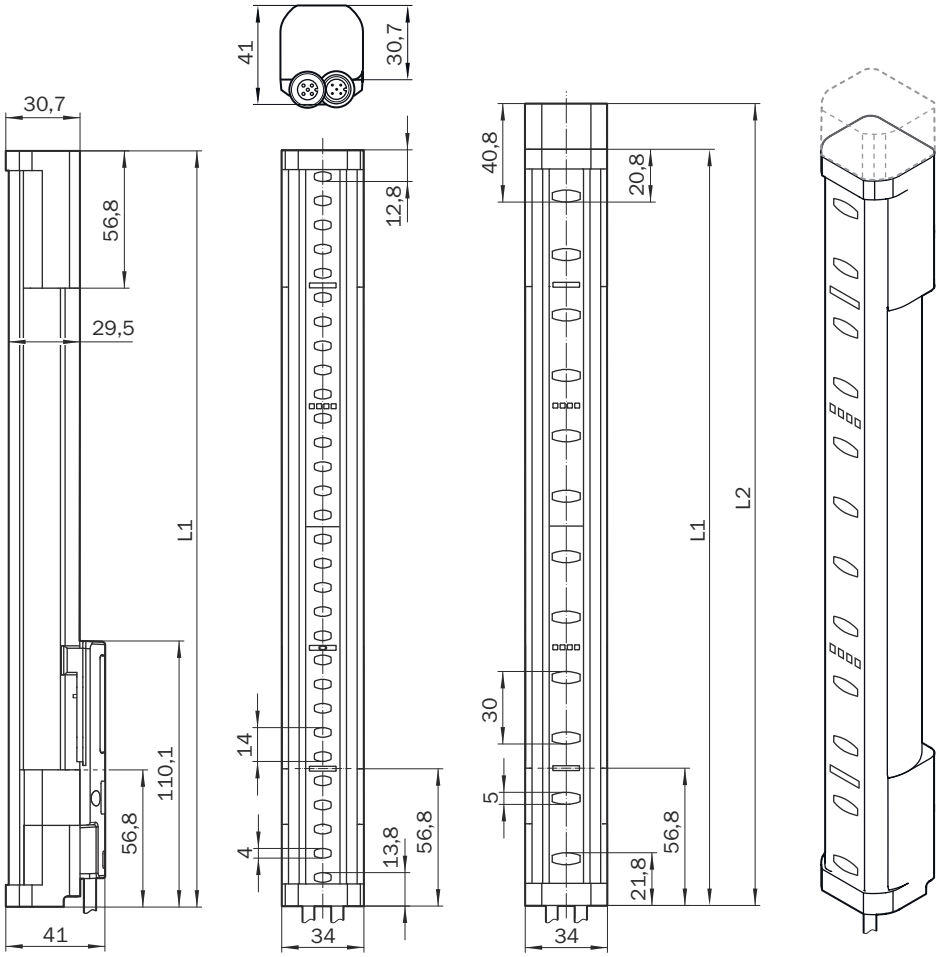

Figure 79: Dimensional drawing of sender and receiver

Table 115: Dimensions based on the protective field height, sender and receiver

Protective field height, nominal in mm	Protective field height, effective = dimension L1 in mm	Dimension L2 in mm
300	313	332
450	463	482
600	613	632
750	763	782
900	913	932
1050	1063	1082
1200	1213	1232
1350	1362	1382
1500	1512	1531
1650	1662	1681
1800	1812	1831
1950	1962	1981

Protective field height, nominal in mm	Protective field height, effective = dimension L1 in mm	Dimension L2 in mm
2100	2112	2131

14 Ordering information

14.1 Scope of delivery

Scope of delivery, sender

- Sender

Scope of delivery, receiver

- Receiver
- Test rod with diameter corresponding to the resolution of the safety light curtain
- Safety note
- Mounting instructions
- Operating instructions for download: **www.sick.com**

14.2 Ordering information

Table 116: Ordering information deTec4 HG 14 mm resolution

Protective field height in mm	Sender	Receiver
	Type code	Type code
300	C4P-SG03011A00	C4P-EG03011C00
450	C4P-SG04511A00	C4P-EG04511C00
600	C4P-SG06011A00	C4P-EG06011C00
750	C4P-SG07511A00	C4P-EG07511C00
900	C4P-SG09011A00	C4P-EG09011C00
1050	C4P-SG10511A00	C4P-EG10511C00
1200	C4P-SG12011A00	C4P-EG12011C00
1350	C4P-SG13511A00	C4P-EG13511C00
1500	C4P-SG15011A00	C4P-EG15011C00
1650	C4P-SG16511A00	C4P-EG16511C00
1800	C4P-SG18011A00	C4P-EG18011C00
1950	C4P-SG19511A00	C4P-EG19511C00
2100	C4P-SG21011A00	C4P-EG21011C00

Table 117: Ordering information deTec4 HG 30 mm resolution

Protective field height in mm	Sender	Receiver
	Type code	Type code
300	C4P-SG03031A00	C4P-EG03031C00
450	C4P-SG04531A00	C4P-EG04531C00
600	C4P-SG06031A00	C4P-EG06031C00
750	C4P-SG07531A00	C4P-EG07531C00
900	C4P-SG09031A00	C4P-EG09031C00
1050	C4P-SG10531A00	C4P-EG10531C00
1200	C4P-SG12031A00	C4P-EG12031C00
1350	C4P-SG13531A00	C4P-EG13531C00
1500	C4P-SG15031A00	C4P-EG15031C00
1650	C4P-SG16531A00	C4P-EG16531C00
1800	C4P-SG18031A00	C4P-EG18031C00
1950	C4P-SG19531A00	C4P-EG19531C00
2100	C4P-SG21031A00	C4P-EG21031C00

Sender with small scanning range

Table 118: Ordering information deTec4 HG 14 mm resolution

Protective field height in mm	Sender
	Type code
300	C4P-SG03011C00
450	C4P-SG04511C00
600	C4P-SG06011C00
750	C4P-SG07511C00
900	C4P-SG09011C00
1050	C4P-SG10511C00
1200	C4P-SG12011C00
1350	C4P-SG13511C00
1500	C4P-SG15011C00
1650	C4P-SG16511C00
1800	C4P-SG18011C00
1950	C4P-SG19511C00
2100	C4P-SG21011C00

receiver with integrated LED

Table 119: Ordering information deTec4 HG 14 mm resolution

Protective field height in mm	Receiver
	Type code
300	C4P-EG03011D00
450	C4P-EG04511D00
600	C4P-EG06011D00
750	C4P-EG07511D00
900	C4P-EG09011D00
1050	C4P-EG10511D00
1200	C4P-EG12011D00
1350	C4P-EG13511D00
1500	C4P-EG15011D00
1650	C4P-EG16511D00
1800	C4P-EG18011D00
1950	C4P-EG19511D00
2100	C4P-EG21011D00

Table 120: Ordering information deTec4 HG 30 mm resolution

Protective field height in mm	Receiver
	Type code
300	C4P-EG03031D00
450	C4P-EG04531D00
600	C4P-EG06031D00
750	C4P-EG07531D00
900	C4P-EG09031D00
1050	C4P-EG10531D00
1200	C4P-EG12031D00
1350	C4P-EG13531D00
1500	C4P-EG15031D00
1650	C4P-EG16531D00
1800	C4P-EG18031D00
1950	C4P-EG19531D00
2100	C4P-EG21031D00

System plug

Table 121: SP1 system plug ordering information

Connection type	Type code	Part number
System connection (M12, 5-pin)	SP1-1000	2076832
System connection (M12, 8-pin)	SP1-1200	2076834
System connection (M12, 5-pin) and extension connection (M12, 5-pin)	SP1-1100	2076833
System connection (M12, 8-pin) and extension connection (M12, 5-pin)	SP1-1300	2076835

Table 122: SP2 system plug ordering information

Connection type	Type codes	Part number
System connection (M12, 5-pin)	SP2-2000	2093097
System connection (M12, 8-pin)	SP2-2200	2093099
System connection (M12, 5-pin) and extension connection (M12, 5-pin)	SP2-2100	2093098
System connection (M12, 8-pin) and extension connection (M12, 5-pin)	SP2-2300	2093100

15 Accessories

15.1 Brackets

Table 123: Brackets ordering information

Part	Type code	Part number
QuickFix bracket (2x)	BEF-3SHABPKU2	2066048
QuickFix bracket (4x)	BEF-3SHABPKU4	2098710
FlexFix bracket (2x)	BEF-1SHABPKU2	2098709
FlexFix bracket (4x)	BEF-1SHABPKU4	2066614
FlexFix mounting kit (2x FlexFix brackets and assembly materials for installation in device columns PP4 and PC4)	BEF-1SHAHBKU2	2141969
Replacement bracket (kit with 4 brackets, mounting kit for replacement of swivel mount brackets 2019649 and 2019659 or side bracket 2019506 with the FlexFix bracket when using the wells provided)	BEF-1SHABS004	2100345
Replacement bracket (kit with 4 brackets, mounting kit for replacement of swivel mount brackets 2030510 or side bracket 2019506 with the FlexFix bracket when using the wells provided)	BEF-1SHABU004	2099282

15.2 Mounting accessories

Table 124: Mounting accessories ordering information

Part	Part number
Alignment tool	4084133

15.3 Extension modules

Table 125: Ordering information for extension modules

Part	Type code	Part number
DMM4	DMM4-AA110A0A0	1125562
DCM4	DCM4-AA100A0A0	1125888

15.4 Weld spark guard

Overview

The weld spark guard can be used to protect the front screen of the safety light curtain.

The weld spark guard reduces the scanning range of the system by 15%.

Important information

DANGER
Hazard due to lack of effectiveness of the protective device

The weld spark guard may influence the optical properties of the safety light curtain, leading to persons or body parts that should be protected being reflected and therefore remaining undetected.

→ Make sure that all reflective surfaces and objects maintain the correct minimum distance from the protective field.

Differing minimum distance to reflective surfaces for devices with a resolution of 30 mm with weld spark guard

If a device with a resolution of 30 mm is used with the weld spark guard, the calculated minimum distance to reflective surfaces ("Minimum distance from reflective surfaces", page 32) must be doubled.

Ordering information

Table 126: Weld spark guard ordering information

Part	Part number
Weld spark guard	2069268

Mounting

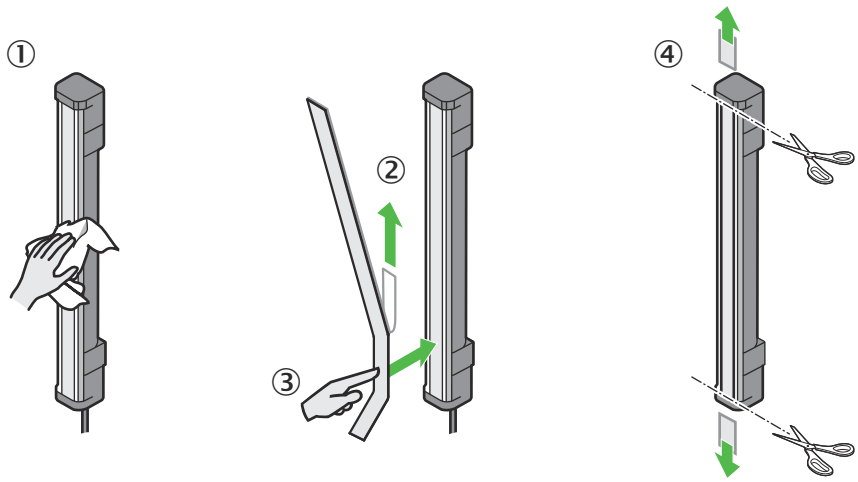

Figure 80: Mount the weld spark guard

① Clean the front screen

② Remove backing film

③ Press against the weld spark guard

④ Cut off excess ends

Further topics

- "Minimum distance from reflective surfaces", page 32

15.5 Connection technology

Table 127: Ordering information for M12 connecting cable, 5-pin (0.34 mm²) [16]

Part	Type code	Part number
Female connector, straight, 2 m cable, flying leads	YF2A15-020UB5XLEAX	2095617
Female connector, straight, 5 m cable, flying leads	YF2A15-050UB5XLEAX	2095618
Female connector, straight, 10 m cable, flying leads	YF2A15-100UB5XLEAX	2095619
Female connector, straight, 15 m cable, flying leads	YF2A15-150UB5XLEAX	2095620
Female connector, straight, 20 m cable, flying leads	YF2A15-200UB5XLEAX	2095614

16) Ambient operating temperature: Down to –30° C with fixed installation.

Part	Type code	Part number
Female connector, straight, 30 m cable, flying leads	YF2A15-300UB5XLEAX	2095621
Female connector, angled, 2 m cable, flying leads	YG2A15-020UB5XLEAX	2095772
Female connector, angled, 5 m cable, flying leads	YG2A15-050UB5XLEAX	2095773
Female connector, angled, 10 m cable, flying leads	YG2A15-100UB5XLEAX	2095774

Table 128: Ordering information for connection cable, M12, 8-pin (0.25 mm²) [17]

Part	Type code	Part number
Female connector, straight, 2 m cable, flying leads	YF2A18-020UA5XLEAX	2095652
Female connector, straight, 2.5 m cable, flying leads	YF2A18-025UA5XLEAX	2099229
Female connector, straight, 5 m cable, flying leads	YF2A18-050UA5XLEAX	2095653
Female connector, straight, 7.5 m cable, flying leads	YF2A18-075UA5XLEAX	2099230
Female connector, straight, 10 m cable, flying leads	YF2A18-100UA5XLEAX	2095654
Female connector, straight, 15 m cable, flying leads	YF2A18-150UA5XLEAX	2095679
Female connector, straight, 20 m cable, flying leads	YF2A18-200UA5XLEAX	2095680
Female connector, straight, 30 m cable, flying leads	YF2A18-300UA5XLEAX	2095681
Female connector, angled, 2 m cable, flying leads	YG2A18-020UA5XLEAX	2095779
Female connector, angled, 5 m cable, flying leads	YG2A18-050UA5XLEAX	2095780
Female connector, angled, 10 m cable, flying leads	YG2A18-100UA5XLEAX	2095781

Table 129: Ordering information for M12 connection cable, 5-pin (0.34 mm²) [18]

Part	Type code	Part number
Female connector, straight, 0.6 m cable, male connector, straight	YF2A15-C60UB5M2A15	2096006
Female connector, straight, 1 m cable, male connector, straight	YF2A15-010UB5M2A15	2096007
Female connector, straight, 2 m cable, male connector, straight	YF2A15-020UB5M2A15	2096009
Female connector, straight, 5 m cable, male connector, straight	YF2A15-050UB5M2A15	2096010
Female connector, straight, 10 m cable, male connector, straight	YF2A15-100UB5M2A15	2096011
Female connector, straight, 15 m cable, male connector, straight	YF2A15-150UB5M2A15	2096171

Table 130: Ordering information for M12 connection cable, 8-pin (0.25 mm²) [18]

Part	Type code	Part number
Female connector, straight, 0.6 m cable, straight male connector	YF2A18-C60UA5M2A18	2096031
Female connector, straight, 1 m cable, straight male connector	YF2A18-010UA5M2A18	2096032

17) Ambient operating temperature: down to –30 °C with fixed installation.

18) Ambient operating temperature: Down to –30° C with fixed installation.

Part	Type code	Part number
Female connector, straight, 20 m cable, straight male connector	YF2A18-020UA5M2A18	2096033
Female connector, straight, 1 m cable, straight male connector	YF2A18-050UA5M2A18	2096034
Female connector, straight, 10 m cable, straight male connector	YF2A18-100UA5M2A18	2096035
Female connector, straight, 15 m cable, straight male connector	YF2A18-150UA5M2A18	2104374

Table 131: Ordering information for connection cable (replacement of C4000 with deTec4) [19]

Part	Type codes	Part number
M12 connection cable, 5-pin to M12, 5-pin	YF2A14-C20UB3M2A14	2096013
Connection cable, M12, 8-pin to M12, 8-pin	DSL-6108GM25034KM1	2034865
Connection cable M12 8-pin to M26, 7-pin	DSL-6130GM25034KM1	2081443
Connection cable M12 8-pin to M26, 12-pin	DSL-6129GM25034KM1	2081442
Connection cable M12 8-pin to M26, 12-pin	DSL-6129GM25034KM7	2112706

Table 132: Ordering information for adapter cable [20]

Part	Type code	Part number
Connection cable for connecting the sender or receiver to the extension module M12, 5-pin to M12, 8-pin	YF2A15-C30S01M2A18	2139463
Connection cable for system connection M12, 8-pin to M12, 4-pin	YF2A18-C30S01M2A14	2139464

Table 133: Ordering information for distributor

Part	Type code	Part number
T distributor, 5-pin	DSC-1205T000025KM0	6030664
T distributor, 8-pin	DSC-1208T000025KM0	6058647
T-connector with pushbutton for laser alignment aid, M12, 5-pin		2077933

Table 134: Ordering information for the connector

Part	Part number
Muting connector	2092758
IO-Link connector	2092757

Table 135: Connection modules ordering information

Part	Part number
SiLink2 master	1061790

Table 136: Sensor Integration Gateway ordering information

Part	Part number
SIG200 REST-API	1102605
SIG200 PROFINET	1089794
SIG200 Ethernet/IP	1089796

Table 137: Protective cap ordering information

Part	Part number
Protective cap, M12 for female connector	5310772

19) Ambient operating temperature: Down to −30° C with fixed installation.

20) Ambient operating temperature: down to -30 °C with fixed installation.

Table 138: Ordering information for power supply

Part	Type code	Part number
Output 24 V DC, 50 W (2.1 A), voltage supply NEC Class 2, SELV, PELV, input 120 V AC ... 240 V AC	PS50WE24V	7028789
Output 24 V DC, 95 W (3.9 A), voltage supply NEC Class 2, SELV, PELV, input 100 V AC ... 120 V / 220 V AC ... 240 V AC	PS95WE24V	7028790

Table 139: Ordering information for control switches

Part	Type code	Part number
Pushbutton, M12, 5-pin [1]	ER12-SB3C5	6045316
Pushbutton with key switch, M12, 5-pin [1] [2]	ER12-SE6F5	6083587

1) Suitable for resetting or for override applications.

2) Suitable for separate actuation of reset and override. Also suitable for teach-in for fixed blanking, optionally with reset.

Table 140: Ordering information for pushbuttons

Part	Part number
Pushbutton for laser alignment aid, M12, 5-pin	2082166
Pushbutton for laser alignment aid, M12, 8-pin	2082167

15.6 Alignment aid

Table 141: Alignment aid ordering information

Part	Part number
AR60 laser alignment aid	1015741
Adapter [1]	4070854

1) The adapter is mandatory for mounting the laser alignment aid on the ESPE.

15.7 Deflector mirrors

15.7.1 Function and use

Overview

Deflector mirrors can be used to shape the protective field to secure hazardous points from multiple sides using a single safety light curtain.

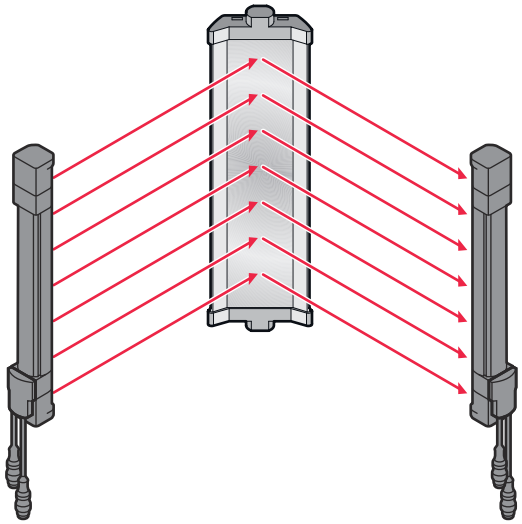

Figure 81: Example of use of deflector mirrors

Important information

DANGER
Hazard due to lack of effectiveness of the protective device

Persons and parts of the body to be protected may not be recognized in case of non-observance.

→ Only mount deflector mirrors to solid walls or machine components. The position of the deflector mirrors must not change after alignment.
→ Do not use deflector mirrors if contamination, beading water, condensation, or frost on the deflector mirrors is to be expected.
→ Make sure that the deflector mirrors are intact and free of scratches, contamination, beading water, condensation, frost, etc. at all times.

Further topics

- "Mirror columns", page 270

15.7.2 Change in scanning range using deflector mirrors

Important information

NOTE
The use of deflector mirrors reduces the scanning range depending on the number of deflector mirrors in the protective field.

Table 142: Scanning range with and without 1 or 2 deflector mirrors

Type	Properties of the ESPE used		Scanning range with 1 deflector mirror, typical	Scanning range with 2 deflection mirrors, typical
	Resolution	Scanning range, typical		
PNS75, PNS125	14 mm	20 m	D1 + D2 ≤ 18 m	D1 + D2 + D3 ≤ 16.2 m
PNS75, PNS125	30 mm	30 m	D1 + D2 ≤ 27 m	D1 + D2 + D3 ≤ 24.3 m

Example: Recommended distance when using deflector mirrors

This example assumes a 90° beam deflection per mirror, and a protective field height of 900 mm.

When using a PNS75 deflector mirror, we recommend a separation of D_1, D_2, $D_3 \leq 4$ m between the deflector mirror and device or between 2 mirrors.

When using a PNS125 deflector mirror, we recommend a separation of D_1, D_2, $D_3 \leq 8$ m between the deflector mirror and the device or between 2 mirrors.

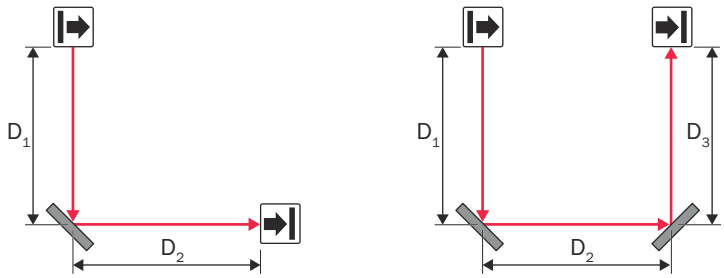

Figure 82: Recommended distance when using deflector mirrors

15.7.3 Deflector mirror PNS75 - ordering information

Table 143: Ordering information for PNS75 deflector mirror

Mirror length in mm	Max. protective field height in mm	Type code	Part number
340	300	PNS75-034	1019414
490	450	PNS75-049	1019415
640	600	PNS75-064	1019416
790	750	PNS75-079	1019417
940	900	PNS75-094	1019418
1090	1050	PNS75-109	1019419
1240	1200	PNS75-124	1019420
1390	1350	PNS75-139	1019421
1540	1500	PNS75-154	1019422
1690	1650	PNS75-169	1019423
1840	1800	PNS75-184	1019424
1990	1950	PNS75-199	1092962
2140	2100	PNS75-214	1092963

15.7.4 Deflector mirror PNS125 - ordering information

Table 144: Ordering information, deflector mirror PNS125

Mirror length in mm	Max. protective field height in mm	Type code	Part number
340	300	PNS125-034	1019425
490	450	PNS125-049	1019426
640	600	PNS125-064	1019427
790	750	PNS125-079	1019428
940	900	PNS125-094	1019429
1090	1050	PNS125-109	1019430
1240	1200	PNS125-124	1019431
1390	1350	PNS125-139	1019432
1540	1500	PNS125-154	1019433
1690	1650	PNS125-169	1019434

Mirror length in mm	Max. protective field height in mm	Type code	Part number
1840	1800	PNS125-184	1019435
1990	1950	PNS125-199	1092964
2140	2100	PNS125-214	1092965

15.8 Mirror columns

Table 145: Ordering information for PM4 mirror columns

Column height	Type code	Part number
995 mm	PM4-A099110000000	1138910
1,095 mm	PM4-A109110000000	1138911
1,195 mm	PM4-A119110000000	1138912
1,295 mm	PM4-A129110000000	1138913
1,475 mm	PM4-A147110000000	1138914
1,625 mm	PM4-A162110000000	1138915
1,775 mm	PM4-A177110000000	1138916
1,925 mm	PM4-A192110000000	1138917
2,075 mm	PM4-A207110000000	1138918
2,225 mm	PM4-A222110000000	1138919
2,375 mm	PM4-A237110000000	1138920

Complementary information

Observe the information on deflector mirrors, particularly on changing the scanning range.

Further topics

- "Deflector mirrors", page 267

15.9 Device columns

Table 146: Ordering information PP4 device columns (protected)

Column height	Type code	Part number
985 mm	PP4-C098110000000	2139645
1,085 mm	PP4-C108110000000	2139646
1,185 mm	PP4-C118110000000	2139647
1,285 mm	PP4-C128110000000	2139649
1,411 mm	PP4-C141110000000	2139650
1,561 mm	PP4-C156110000000	2139651
1,711 mm	PP4-C171110000000	2139652
1,861 mm	PP4-C186110000000	2139653
2,011 mm	PP4-C201110000000	2139654
2,161 mm	PP4-C216110000000	2139655
2,311 mm	PP4-C231110000000	2139656

Table 147: Ordering information PC4 device columns (compact)

Column height	Type code	Part number
985 mm	PC4-C098100000000	2139633
1,085 mm	PC4-C108100000000	2139635
1,185 mm	PC4-C118100000000	2139636
1,285 mm	PC4-C128100000000	2139637
1,411 mm	PC4-C141100000000	2139638
1,561 mm	PC4-C156100000000	2139639

Column height	Type code	Part number
1,711 mm	PC4-C171100000000	2139640
1,861 mm	PC4-C186100000000	2139641
2,011 mm	PC4-C201100000000	2139642
2,161 mm	PC4-C216100000000	2139643
2,311 mm	PC4-C231100000000	2139644

15.10 Cleaning agent

Table 148: Ordering information for cleaning agents

Part	Part number
Lens cleaner (with label for North America, South America, Western Europe)	5606490
Lens cleaner (with label for Africa, Asia, Middle East)	5606721
Lens cleaner (with label for Northern Europe, Eastern Europe)	5606754
Lens cloth	4003353

15.11 Test rods

Table 149: Ordering information for test rods

Part	Part number
Test rod 14 mm	2022599
Test rod 30 mm	2022602
Test rod holder	2052249

Table 150: Ordering information for test rods with reduced resolution

Part	Part number
Test rod 24 mm	2045592
Test rod 34 mm	2045593

15.12 Muting accessories

Table 151: Ordering information for muting lamps

Part	Part number
Muting indicator lamp, including M12 male connector and connection cable (2 m), mounting bracket and mounting kit	2033118
Muting indicator lamp, incl. M12 male connector and connection cable (10 m), mounting bracket and mounting kit	2033119
LED lamp, incl. mounting bracket and mounting kit	2129217

Table 152: Ordering information for muting sensors and reflectors [1)]

Part	Type code	Part number
Photoelectric retro-reflective sensor	GL6-P0211S49	1070568
	GL6G-P0211S98	2142441
	GL6G-P1211	2045515
	GL6G-P4211	1059632
	GL10-P4151	1069860
	GL10-F4551	1071153
Photoelectric proximity sensor	GTB6-P7441S56	1077541
	GTB10-P4411S01	1066852
Reflector	P250	5304812

1) The specified muting sensors have been tested for the application and are therefore particularly recommended by SICK. A further selection of muting sensors are available at www.sick.com.

Table 153: Ordering information for muting sensor and reflector brackets

Part	Part number
Muting bracket, fixed, for parallel muting, can be used for G6 muting sensor or P250 reflector	2113145
Muting bracket, rotatable, for parallel muting or cross muting, can be used for G6, G10, H18 muting sensor or P250 reflector	2139886

Table 154: Ordering information for muting arms

Part	Part number
Muting arm, short, 200 mm	2111924
Muting arm, long, 400 mm	2111923
Cable cover for muting arm, 400 mm	2115890

Table 155: Ordering information for brackets for muting arms

Part	Part number
Muting arm bracket for mounting on devices [1]	2106455
Muting arm bracket for mounting on device columns [1]	2140086

[1] A muting arm bracket is essential for mounting a muting arm.

Table 156: Ordering information for muting arm kits

Part	muting variant	Scope of delivery	Part number
L-muting arm kit, mounting on the device, left [1]	Parallel muting	• 2 muting arms, long • 2 sensors • 2 reflectors • Compatible brackets	2139901
L-muting arm kit, mounting on the device, right [1]	Parallel muting	• 2 muting arms, long • 2 sensors • 2 reflectors • Compatible brackets	2140130
T-muting arm kit, mounting on the device	Parallel muting	• 4 muting arms, long • 4 sensors • 4 reflectors • Compatible brackets	2139902
X-muting arm kit, mounting on the device	Cross muting	• 2 muting arms, long • 2 muting arms, short • 2 sensors • 2 reflectors • Compatible brackets	2139900
L-muting arm kit, mounting on a device column, left [1]	Parallel muting	• 2 muting arms, long • 2 sensors • 2 reflectors • Compatible brackets	2139904
L-muting arm kit, mounting on a device column, right [1]	Parallel muting	• 2 muting arms, long • 2 sensors • 2 reflectors • Compatible brackets	2140131
T-muting arm kit, mounting on a device column	Parallel muting	• 4 muting arms, long • 4 sensors • 4 reflectors • Compatible brackets	2139905
X-muting arm kit, mounting on a device column	Cross muting	• 2 muting arms, long • 2 muting arms, short • 2 sensors • 2 reflectors • Compatible brackets	2139903

[1] When looking at the front of the device.

Table 157: Ordering information for protective cover

Part	Part number
Protective cover for muting sensors, right	2140187
Protective cover for muting sensors, left	2140186

15.13 Additional accessories

Table 158: Ordering information for information label

Part	Part number
Information label for reduced resolution [1] [2]	2101711

1) The information label cannot be used in applications with configured Smart Box Detection or in applications with configured blanking with size tolerance.

2) The information label can only be used in applications with a reduced resolution of 1 or 2 beams.

16 Annex

16.1 Conformities and certificates

You can obtain declarations of conformity, certificates, and the current operating instructions for the product at **www.sick.com**. To do so, enter the product part number in the search field (part number: see the entry in the “P/N” or “Ident. no.” field on the type label).

16.1.1 EU declaration of conformity

Excerpt

The undersigned, representing the manufacturer, herewith declares that the product is in conformity with the provisions of the following EU directive(s) (including all applicable amendments), and that the standards and/or technical specifications stated in the EU declaration of conformity have been used as a basis for this.

- ROHS DIRECTIVE 2011/65/EU
- MACHINERY DIRECTIVE 2006/42/EC
- RE DIRECTIVE 2014/53/EU

16.1.2 UK declaration of conformity

Excerpt

The undersigned, representing the following manufacturer herewith declares that this declaration of conformity is issued under the sole responsibility of the manufacturer. The product of this declaration is in conformity with the provisions of the following relevant UK Statutory Instruments (including all applicable amendments), and the respective standards and/or technical specifications have been used as a basis.

- Restriction of the Use of Certain Hazardous Substances in Electrical and Electronic Equipment Regulations 2012
- Supply of Machinery (Safety) Regulations 2008
- Radio Equipment Regulations 2017

16.2 Note on standards

Standards are specified in the information provided by SICK. The table shows regional standards with similar or identical contents. Not every standard applies to all products.

Table 159: Note on standards

Standard	Standard (regional)
	China
IEC 60068-2-6	GB/T 2423.10
IEC 60068-2-27	GB/T 2423.5
IEC 60204-1	GB/T 5226.1
IEC 60529	GB/T 4208
IEC 60825-1	GB 7247.1
IEC 61131-2	GB/T 15969.2
IEC 61140	GB/T 17045
IEC 61496-1	GB/T 19436.1
IEC 61496-2	GB/T 19436.2
IEC 61496-3	GB 19436.3
IEC 61508	GB/T 20438
IEC 62061	GB 28526
ISO 13849-1	GB/T 16855.1

Standard	Standard (regional)
	China
ISO 13855	GB/T 19876

16.3 Checklist for initial commissioning and commissioning

Checklist for manufacturers or installers for installing electro-sensitive protective device (ESPE)

The details relating to the items listed below must be available no later than when the system is commissioned for the first time. However, these depend on the specific application (the requirements of which must be reviewed by the manufacturer or installer).

This checklist should be retained and kept with the machine documentation to serve as reference during recurring tests.

This checklist does not replace the initial commissioning, nor the regular inspection by qualified safety personnel.

Have the safety rules and regulations been observed in compliance with the directives and standards applicable to the machine?	Yes ☐ No ☐
Are the applied directives and standards listed in the declaration of conformity?	Yes ☐ No ☐
Does the protective device correspond to the required PL/SIL and PFH in accordance with ISO 13849-1/IEC 62061 and the required type in accordance with IEC 61496-1?	Yes ☐ No ☐
Is access to the hazardous area or hazardous point only possible through the protective field of the ESPE?	Yes ☐ No ☐
Have appropriate measures been taken to protect (mechanical protection) or monitor (protective devices) any persons or objects in the hazardous area when protecting a hazardous area or hazardous point, and have these devices been secured or locked to prevent their removal?	Yes ☐ No ☐
Are additional mechanical protective measures fitted and secured against manipulation which prevent reaching below, above or around the ESPE?	Yes ☐ No ☐
Has the maximum shutdown and/or stopping time of the machine been measured, specified and documented (at the machine and/or in the machine documentation)?	Yes ☐ No ☐
Has the ESPE been mounted such that the required separation distance from the nearest hazardous point has been achieved?	Yes ☐ No ☐
Are the ESPE devices properly mounted and secured against manipulation after alignment?	Yes ☐ No ☐
Are the required protective measures against electric shock in effect (protection class)?	Yes ☐ No ☐
Is the control switch for resetting the protective devices (ESPE) or restarting the machine present and correctly installed?	Yes ☐ No ☐
Are the outputs of the ESPE (OSSDs or safety outputs via the network) integrated according to the required PL/SIL in accordance with ISO 13849-1 / IEC 62061 and does the integration correspond to the circuit diagrams?	Yes ☐ No ☐
Has the protective function been checked in compliance with the test notes of this documentation?	Yes ☐ No ☐
Are the specified protective functions effective at every operating mode that can be set?	Yes ☐ No ☐
Are the switching elements activated by the ESPE, e.g. contactors, valves, monitored?	Yes ☐ No ☐
Is the ESPE effective over the entire period of the dangerous state?	Yes ☐ No ☐
Once initiated, will a dangerous state be stopped when switching the ESPE on or off and when changing the operating mode, or when switching to another protective device?	Yes ☐ No ☐

17 List of figures

1. Laser class 1 ... 11
2. SICK product ID ... 14
3. Sender and receiver ... 15
4. Overview of the device (sender or receiver) ... 16
5. NFC symbol ... 17
6. Sender displays ... 22
7. Receiver displays ... 23
8. Hazardous point protection ... 25
9. Access protection ... 25
10. Hazardous area protection ... 26
11. Access protection with smart presence detection, implemented using cascade. 26
12. Minimum distance from reflective surfaces ... 32
13. Graph of minimum distance from reflective surfaces ... 33
14. Preventing mutual interference of system ① and system ② ... 35
15. Trouble-free operation due to beam coding ... 36
16. Trouble-free operation due to reversed direction of transmission of system ① and system ② ... 37
17. Trouble-free operation of 4 neighboring systems due to beam coding and reversed direction of transmission ... 37
18. Trouble-free operation with sufficient distance ... 39
19. Cross muting ... 44
20. Exit monitoring ... 46
21. Serial arrangement of the muting sensors ... 48
22. Parallel arrangement of the muting sensors ... 48
23. Muting ends as soon as the ESPE is clear again (example for exit monitoring) ... 51
24. Signal sequence with configured supplementary signal during a muting cycle (example for entry/exit monitoring) ... 55
25. Partial muting ... 56
26. Signal sequence with configured supplementary signal during a muting cycle (example for entry/exit monitoring) ... 58
27. Smart Box Detection application example ... 62
28. Left: Rectangular shadow without gaps. Right: Shadow with gaps ... 63
29. Smart Box Detection: Object properties ... 63
30. Lateral object edge tolerance for an uncoded system ... 65
31. Lateral object edge tolerance for a coded system ... 66
32. Object distance and object width dependent on object speed ... 66
33. Blanking ... 72
34. Fixed blanking: Machine table permanently in the protective field ... 74
35. Fixed blanking with increased size tolerance: machine table permanently in the protective field, material transportation via the machine table ... 76
36. Floating blanking: moving machine part in the protective field ... 78
37. Example application: goods detection ... 89
38. Example application: pallet detection ... 90
39. Example application: object entry monitoring ... 92
40. Example application: object pattern recognition (general) ... 93
41. Dual-channel and isolated connection of OSSD1 and OSSD2 ... 104
42. No potential difference between load and protective device ... 104
43. Schematic representation of operation with restart interlock ... 106
44. Electrical diagram of the reset device ... 106
45. Electrical diagram of external device monitoring (EDM) ... 110
46. Electrical diagram of the application diagnostic output ... 110
47. Switch for the integrated laser alignment aid ... 117
48. Cascade ... 119
49. Test rod check: Step 1 ... 127
50. Test rod check: Step 3 ... 128
51. Fitting the system plug ... 131
52. Sender and receiver must not be installed such that they are rotated 180° relative to each other ... 132

53. Mounting the QuickFix bracket on a profile....136
54. Mounting the FlexFix bracket to a profile frame....137
55. Inserting the safety light curtain in the FlexFix brackets....138
56. Dual-channel and isolated connection of OSSD1 and OSSD2....141
57. No potential difference between load and protective device....142
58. System connection (male connector, M12, 5-pin)....142
59. System connection (male connector M12, 8-pin)....143
60. Extension connection (female connector M12, 5-pin)....144
61. Additional connections on the DMM4 extension module (female connector, M12, 5-pin)....145
62. Additional connections on the DCM4 extension module (socket, M12, 8-pin)....146
63. SP1 system plug with 2 DIP switches....152
64. SP2 system plug with 14 DIP switches....152
65. Configuring beam coding....154
66. DIP switch for muting on the SP2 system plug....155
67. DIP switch for the protective field widths on the SP2 system plug....157
68. DIP switch for reduced resolution on SP2 system plug....158
69. DIP switch for smart presence detection on SP2 system plug....159
70. DIP switch for Smart Box Detection on SP2 system plug....160
71. DIP switch for parity on SP2 system plug....161
72. Reset to factory settings....166
73. Example **Overview** page for a deTec4 system with extension module DMM4....171
74. Example **Hardware configuration** page for a deTec4 system with extension module DMM4....174
75. QuickFix bracket: adjustment....198
76. FlexFix bracket: adjustment/rotation....199
77. Message history....225
78. Live view....227
79. Dimensional drawing of sender and receiver....258
80. Mount the weld spark guard....264
81. Example of use of deflector mirrors....268
82. Recommended distance when using deflector mirrors....269

18 List of tables

1. Target groups and selected sections of these operating instructions ... 8
2. Function packages ... 18
3. Function packages and included functions ... 18
4. Use of SP1 system plug in a single system ... 19
5. Use of SP2 system plug in a single system ... 20
6. Use of system plugs in a cascade ... 20
7. Sender displays ... 22
8. Receiver displays ... 23
9. Colors and their meaning ... 23
10. Indication of the configuration status ... 24
11. Alignment quality display ... 24
12. Fault indication ... 24
13. Warnings ... 24
14. Resulting ranges with manual setting of the protective field width (full transmitting power, resolution 14 mm) ... 29
15. Resulting ranges with manual setting of the protective field width (reduced transmitting power, resolution 14 mm) ... 30
16. Resulting ranges with manual setting of the protective field width (full transmitting power, resolution 30 mm) ... 30
17. Resulting ranges with manual setting of the protective field width (reduced transmitting power, resolution 30 mm) ... 30
18. Formula for calculating the minimum distance to reflective surfaces with automatic calibration of the protective field width ... 33
19. Formula for calculating the minimum distance to reflective surfaces when manually setting the protective field width (resolution 14 mm) ... 34
20. Formula for calculating the minimum distance to reflective surfaces when manually setting the protective field width (resolution 30 mm) ... 34
21. Effective resolution with reduced resolution ... 40
22. Conditions for entry/exit monitoring ... 48
23. Input signals from bandstop ... 59
24. Permitted object properties ... 64
25. Upper and lower object edge tolerance depends on the reduced resolution ... 66
26. Supplement Z_{SBD} ... 68
27. Effective resolution with Smart Box Detection in combination with reduced resolution ... 68
28. Object sizes and position tolerance ... 74
29. Object gaps for fixed blanking ... 75
30. Object size tolerance ... 79
31. Minimum and maximum object size for floating blanking ... 79
32. Effective resolution for blanking with size tolerance without reduced resolution ... 80
33. Effective resolution for fixed blanking with size tolerance and reduced resolution 81
34. Valid combinations of input signals at the X3 connection on the DMM4 (safety inputs) ... 83
35. Valid combinations of input signals at the connection for the sender or operating modes on the DCM4 (safety inputs) ... 83
36. Calculation of the object size to detect a valid object ... 95
37. Calculation to ensure safe shutdown with small or large objects ... 95
38. Number of objects depending on the protective field height and the reduced resolution ... 96
39. Maximum size of an object gap ... 97
40. Calculation of the minimum and maximum object separation ... 98
41. Calculation to ensure safe shutdown if the object separation is too small or too large ... 98
42. Object size and object separation tolerances for safe switch-off ... 100
43. Calculation of the object sizes for the smart restart interlock ... 109
44. Available output signals ... 111
45. Combined output signals ... 113
46. Side and rear mounting with the QuickFix bracket ... 135

47. Lateral and rear mounting with the FlexFix bracket....137
48. System connection pin assignment SP1 or SP2 (male connector, M12, 5-pin).....142
49. Pin assignment of SP1 or SP2 system connection (male connector, M12, 8-pin).. 143
50. Pin assignment of system connection on DMM4 or DCM4 extension module (male connector, M12, 8-pin).... 144
51. Pin assignment of SP1 or SP2 extension connection (female connector, M12, 5-pin) 144
52. Pin assignment of A1, A2, B1, B2 connections (DMM4, female connector, M12, 5-pin)....146
53. Pin assignment of X1, X2, X3 connections (DMM4, female connector, M12, 5-pin)..... 146
54. Pin assignment of sender or operating modes connection (socket, M12, 8-pin)...146
55. Factory settings of the configurable functions.... 149
56. Configuration mode....150
57. Functions and their configuration type.... 151
58. Overview of DIP switches....152
59. Possible combinations of functions on SP2 system plug....153
60. DIP switches and beam coding....154
61. DIP switch and muting.... 155
62. Settings depending on the muting variant....156
63. DIP switches and scanning range....157
64. DIP switches and reduced resolution....158
65. DIP switch and smart presence detection.... 159
66. DIP switch and Smart Box Detection....160
67. Smart Box Detection parameter settings....160
68. Output signals on the system connection and extension connection....163
69. Functions and their limitations.... 172
70. Available elements for the hardware configuration....175
71. User groups....191
72. Options for restoring the configuration when replacing the device.... 192
73. Alignment quality display.... 200
74. Indications on the sender when switching on....205
75. Indications on the receiver when switching on.... 205
76. Alignment quality display....207
77. LEDs on the sender during normal operation....208
78. LEDs on the receiver during normal operation.... 208
79. Fault indication on the sender.... 215
80. Fault indication on the receiver.... 217
81. Message history....226
82. Data recorder....227
83. Version numbers and functional scope of the receiver....231
84. Version numbers and functional scope of the sender....232
85. General system data....232
86. Mechanical data.... 234
87. Technical data for sender.... 234
88. Technical data for receiver.... 235
89. Operating data.... 236
90. Maximum number of beams for a standalone device....237
91. Maximum number of beams in a cascade with one guest.... 237
92. Maximum number of beams in a cascade with two guest devices.... 238
93. Response time of a single device in ms with protective field height of 300 mm..239
94. Response time of a single device in ms with protective field height of 450 mm. 240
95. Response time of a single device in ms for protective field height 600 mm.....241
96. Response time of a single device in ms for protective field height 750 mm..... 242
97. Response time of a single device in ms for protective field height 900 mm.....243
98. Response time of a single device in ms for protective field height 1050 mm..... 244
99. Response time of a single device in ms with protective field height of 1,200 mm..... 245
100. Response time of a single device in ms for protective field height 1350 mm.....246
101. Response time of a single device in ms for protective field height 1500 mm.....247

102. Response time of a single device in ms for protective field height 1650 mm..... 248
103. Response time of a single device in ms for protective field height 1800 mm..... 249
104. Response time of a single device in ms for protective field height 1950 mm..... 250
105. Response time of a single device in ms for protective field height 2100 mm..... 251
106. Muting tolerance times.....253
107. Tolerance time for operating mode change..... 253
108. Power consumption of sender and receiver (resolution 14 mm)..... 254
109. Power consumption of sender and receiver (resolution 30 mm)..... 254
110. Maximum lengths of cable for conductor cross section 0.34 mm², copper wire.255
111. Maximum lengths of cable for conductor cross section 0.25 mm², copper cable..... 256
112. Maximum cable lengths for applications with the DMM4 extension module, copper cable..... 256
113. Maximum cable lengths for applications with the DCM4 extension module, copper cable.....257
114. Weight of sender and receiver.....257
115. Dimensions based on the protective field height, sender and receiver.....258
116. Ordering information deTec4 HG 14 mm resolution.....260
117. Ordering information deTec4 HG 30 mm resolution.....260
118. Ordering information deTec4 HG 14 mm resolution..... 261
119. Ordering information deTec4 HG 14 mm resolution..... 261
120. Ordering information deTec4 HG 30 mm resolution..... 261
121. SP1 system plug ordering information.....262
122. SP2 system plug ordering information.....262
123. Brackets ordering information.....263
124. Mounting accessories ordering information..... 263
125. Ordering information for extension modules..... 263
126. Weld spark guard ordering information..... 264
127. Ordering information for M12 connecting cable, 5-pin (0.34 mm²) 264
128. Ordering information for connection cable, M12, 8-pin (0.25 mm²) 265
129. Ordering information for M12 connection cable, 5-pin (0.34 mm²) 265
130. Ordering information for M12 connection cable, 8-pin (0.25 mm²) 265
131. Ordering information for connection cable (replacement of C4000 with deTec4) 266
132. Ordering information for adapter cable 266
133. Ordering information for distributor..... 266
134. Ordering information for the connector.....266
135. Connection modules ordering information.....266
136. Sensor Integration Gateway ordering information.....266
137. Protective cap ordering information..... 266
138. Ordering information for power supply.....267
139. Ordering information for control switches.....267
140. Ordering information for pushbuttons..... 267
141. Alignment aid ordering information..... 267
142. Scanning range with and without 1 or 2 deflector mirrors.....268
143. Ordering information for PNS75 deflector mirror.....269
144. Ordering information, deflector mirror PNS125..... 269
145. Ordering information for PM4 mirror columns.....270
146. Ordering information PP4 device columns (protected).....270
147. Ordering information PC4 device columns (compact)..... 270
148. Ordering information for cleaning agents..... 271
149. Ordering information for test rods..... 271
150. Ordering information for test rods with reduced resolution.....271
151. Ordering information for muting lamps.....271
152. Ordering information for muting sensors and reflectors 271
153. Ordering information for muting sensor and reflector brackets..... 272
154. Ordering information for muting arms..... 272
155. Ordering information for brackets for muting arms..... 272
156. Ordering information for muting arm kits..... 272
157. Ordering information for protective cover.....273

158. Ordering information for information label..... 273
159. Note on standards..... 274

SICK AG
WALDKIRCH
GERMANY
SICK.COM

SICK AT A GLANCE

SICK is a globally leading company in intelligent sensors and sensor solutions. With over 10,000 employees, more than 60 subsidiaries and equity investments as well as numerous agencies worldwide, SICK is always close to its customers.

With a unique range of products and services for factory and logistics automation, SICK creates added value along the entire value chain of its customers. In addition, SICK brings extensive industry and application experience as well as a deep understanding of its customers' processes and requirements.

Partnering for the better, optimizing productivity, elevating quality, and protecting health and safety – this is what SICK stands for.

THAT IS “SENSOR INTELLIGENCE”.

8023856/1SWC/2026-02-05/en

SICK
Sensor Intelligence