Product data sheet

IH06-04NNS-VW1

IMM

INDUCTIVE PROXIMITY SENSORS

SICK
Sensor Intelligence.

Illustration may differ

Ordering information

Type	Part no.
IH06-04NNS-VW1	7900182

Other models and accessories → www.sick.com/IMM

Detailed technical data

Features

Housing	Cylindrical smooth housing
Housing	Standard design
Diameter	Ø 6.5 mm
Sensing range S_n	4 mm
Safe sensing range S_a	3.24 mm
Installation type	Non-flush
Switching frequency	1,800 Hz
Connection type	Cable, 3-wire, 2 m
Switching output	NPN
Output function	NO
Electrical wiring	DC 3-wire
Enclosure rating	IP67 [1]

[1] According to EN 60529.

Mechanics/electronics

Supply voltage	10 V DC ... 30 V DC
Ripple	≤ 10 % [1]
Voltage drop	≤ 2 V [2]
Time delay before availability	≤ 50 ms
Hysteresis	1 % ... 20 %

[1] Of V_S.
[2] With Ia = 200 mA.
[3] Supply voltage U_B and constant ambient temperature Ta.
[4] Of Sr.

Reproducibility	≤ 5 % [3) 4)]
Temperature drift (of S_r)	± 10 %
EMC	EN 60947-5-2 IEC 61000-4-2: (Testlevel 2) IEC 61000-4-4: (Testlevel 3)
Continuous current I_a	≤ 200 mA
Cable material	PVC
Conductor size	0.14 mm²
Cable diameter	Ø 3.1 mm
Short-circuit protection	✓
Reverse polarity protection	✓
Power-up pulse protection	✓
Shock and vibration resistance	30 g, 11 ms / 10 ... 55 Hz, 1 mm
Ambient operating temperature	–25 °C ... +70 °C
Housing material	Stainless steel V2A, DIN 1.4305 / AISI 303
Sensing face material	Plastic, POM
Housing length	45 mm
UL File No.	NMFT2.E175606

[1)] Of V_S.
[2)] With Ia = 200 mA.
[3)] Supply voltage U_B and constant ambient temperature Ta.
[4)] Of Sr.

Reduction factors

Note	The values are reference values which may vary
Stainless steel (V2A, 304)	Approx. 0.77
Aluminum (Al)	Approx. 0.47
Copper (Cu)	Approx. 0.42
Brass (Br)	Approx. 0.52

Installation note

Remark	Associated graphic see "Installation"
A	6.5 mm
B	13 mm
C	6.5 mm
D	12 mm
E	8 mm
F	32 mm

Classifications

ECLASS 5.0	27270101
ECLASS 5.1.4	27270101
ECLASS 6.0	27270101
ECLASS 6.2	27270101
ECLASS 7.0	27270101

ECLASS 8.0	27270101
ECLASS 8.1	27270101
ECLASS 9.0	27270101
ECLASS 10.0	27270101
ECLASS 11.0	27270101
ECLASS 12.0	27274001
ETIM 5.0	EC002714
ETIM 6.0	EC002714
ETIM 7.0	EC002714
ETIM 8.0	EC002714
UNSPSC 16.0901	39122230

Installation note

Non-flush installation

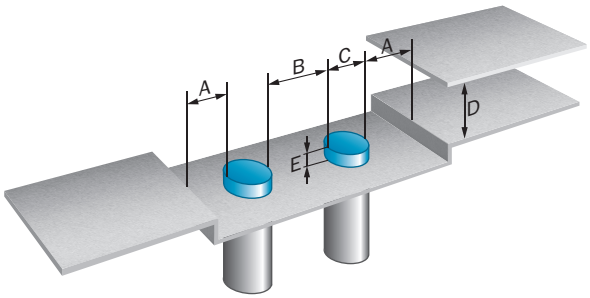

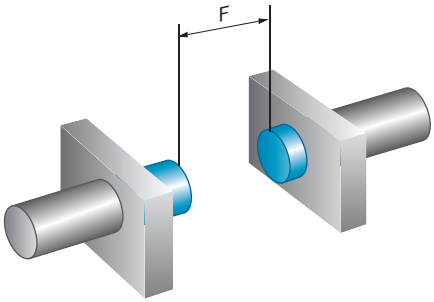

Connection diagram

Cd-001

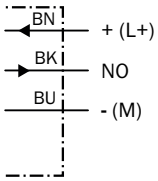

Dimensional drawing (Dimensions in mm (inch))

Standard-body, non-flush, cable

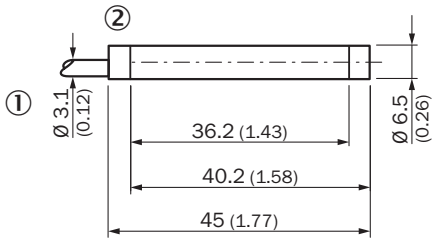

① Connection
② Display LED

Recommended accessories

Other models and accessories ➜ www.sick.com/IMM

	Brief description	Type	Part no.
Plug connectors and cables			
	• **Connection type head A:** Female connector, M8, 3-pin, straight, A-coded • **Connection type head B:** Flying leads • **Signal type:** Sensor/actuator cable • **Cable:** 2 m, 3-wire, PVC • **Description:** Sensor/actuator cable, unshielded • **Application:** Zones with chemicals	YF8U13-020VA1XLEAX	2095860
	• **Connection type head A:** Female connector, M8, 3-pin, straight, A-coded • **Connection type head B:** Flying leads • **Signal type:** Sensor/actuator cable • **Cable:** 5 m, 3-wire, PVC • **Description:** Sensor/actuator cable, unshielded • **Application:** Zones with chemicals	YF8U13-050VA1XLEAX	2095884
	• **Connection type head A:** Female connector, M8, 3-pin, straight, A-coded • **Connection type head B:** Flying leads • **Signal type:** Sensor/actuator cable • **Cable:** 10 m, 3-wire, PVC • **Description:** Sensor/actuator cable, unshielded • **Application:** Zones with chemicals	YF8U13-100VA1XLEAX	2095885
	• **Connection type head A:** Female connector, M8, 3-pin, angled, A-coded • **Connection type head B:** Flying leads • **Signal type:** Sensor/actuator cable • **Cable:** 2 m, 3-wire, PVC • **Description:** Sensor/actuator cable, unshielded • **Application:** Zones with chemicals	YG8U13-020VA1XLEAX	2096165
	• **Connection type head A:** Female connector, M8, 3-pin, angled, A-coded • **Connection type head B:** Flying leads • **Signal type:** Sensor/actuator cable • **Cable:** 5 m, 3-wire, PVC • **Description:** Sensor/actuator cable, unshielded • **Application:** Zones with chemicals	YG8U13-050VA1XLEAX	2096166
	• **Connection type head A:** Female connector, M8, 3-pin, angled, A-coded • **Connection type head B:** Flying leads • **Signal type:** Sensor/actuator cable • **Cable:** 10 m, 3-wire, PVC • **Description:** Sensor/actuator cable, unshielded • **Application:** Zones with chemicals	YG8U13-100VA1XLEAX	2096209

	Brief description	Type	Part no.
	• **Connection type head A:** Female connector, M8, 3-pin, straight, A-coded • **Connection type head B:** Male connector, M12, 3-pin, straight, A-coded • **Signal type:** Sensor/actuator cable • **Cable:** 2 m, 3-wire, PVC • **Description:** Sensor/actuator cable, unshielded • **Application:** Zones with chemicals	YF8U13-020VA1M2A13	2096605
	• **Connection type head A:** Female connector, M8, 3-pin, straight, A-coded • **Connection type head B:** Male connector, M12, 3-pin, straight, A-coded • **Signal type:** Sensor/actuator cable • **Cable:** 5 m, 3-wire, PVC • **Description:** Sensor/actuator cable, unshielded • **Application:** Zones with chemicals	YF8U13-050VA1M2A13	2096606
	• **Connection type head A:** Female connector, M8, 3-pin, straight • **Description:** Unshielded • **Connection systems:** Screw-type terminals • **Permitted cross-section:** 0.14 mm² ... 0.5 mm²	DOS-0803-G	7902077
	• **Connection type head A:** Female connector, M8, 3-pin, angled • **Description:** Unshielded • **Connection systems:** Solder connection • **Permitted cross-section:** ≤ 0.25 mm²	DOS-0803-W	7902078
	• **Connection type head A:** Male connector, M8, 3-pin, straight • **Description:** Unshielded • **Connection systems:** Screw-type terminals • **Permitted cross-section:** 0.14 mm² ... 0.5 mm²	STE-0803-G	6037322
Terminal and alignment brackets			
	Plastic (PA6), without mounting hardware	BEF-KH-M06	2101067

SICK AT A GLANCE

SICK is one of the leading manufacturers of intelligent sensors and sensor solutions for industrial applications. A unique range of products and services creates the perfect basis for controlling processes securely and efficiently, protecting individuals from accidents and preventing damage to the environment.

We have extensive experience in a wide range of industries and understand their processes and requirements. With intelligent sensors, we can deliver exactly what our customers need. In application centers in Europe, Asia and North America, system solutions are tested and optimized in accordance with customer specifications. All this makes us a reliable supplier and development partner.

Comprehensive services complete our offering: SICK LifeTime Services provide support throughout the machine life cycle and ensure safety and productivity.

For us, that is "Sensor Intelligence."

WORLDWIDE PRESENCE:

Contacts and other locations –www.sick.com

SICK
Sensor Intelligence.