Data sheet

LFV200-XXHRLIPM

LFV200

LEVEL SENSORS

SICK
Sensor Intelligence.

Illustration may differ

Ordering information

Type	part no.
LFV200-XXHRLIPM	6082243

Other models and accessories ➜ www.sick.com/LFV200

Detailed technical data

Features

Medium	Fluids
Measurement	Switch
Probe type	Tuning fork
Probe length	67 mm
Process pressure	–1 bar ... 64 bar
Process temperature	–40 °C ... +150 °C
Fill material density	0.7 g/cm³ ... 2.5 g/cm³

Performance

Accuracy of sensor element	± 2 mm
Reproducibility	≤ 1 mm
Viscosity	0.1 mPas ... 10,000 mPas
Resolution	≤ 1 mm
Response time	500 ms
MTBF	1,25*10^7 h

Electronics

Communication interface	IO-Link
Supply voltage	18 V DC ... 30 V DC
Residual ripple	≤ 5 V_{pp}
Power consumption	≤ 4.2 mA
Initialization time	< 2 s
VDE protection class 1	✓
Connection type	M12 round connector x 1, 4-pin
Output signal	Transistor output PNP with IO-Link

Hysteresis	2 mm
Output current	< 250 mA
Inductive load	≤ 1 H
Capacitive load	100 nF
Enclosure rating	IP67
Temperature drift	0.03 mm/K

Mechanics

Wetted parts	Stainless steel 1.4404 / 316L
Surface roughness	Ra ≤ 0,8 µm
Process connection	Conical coupling DN 25 acc. to DIN 11851 with Union nut (PN 40, 316L, Ra < 0.8µm)
Housing material	Stainless steel 1.4404 / 316L, PEI

Ambient data

Ambient operating temperature	–40 °C ... +70 °C
Ambient temperature, storage	–40 °C ... +80 °C

Certificates

EU declaration of conformity	✓
UK declaration of conformity	✓
ACMA declaration of conformity	✓
China RoHS	✓
EHEDG approval	✓
IO-Link certificate	✓
Food contact material manufacturer declaration	✓
Information according to Art. 3 of Data Act (Regulation EU 2023/2854)	✓

Classifications

ECLASS 5.0	27273202
ECLASS 5.1.4	27273202
ECLASS 6.0	27273202
ECLASS 6.2	27273202
ECLASS 7.0	27273202
ECLASS 8.0	27273202
ECLASS 8.1	27273202
ECLASS 9.0	27273202
ECLASS 10.0	27273202
ECLASS 11.0	27273202
ECLASS 12.0	27273106
ETIM 5.0	EC002654
ETIM 6.0	EC002654
ETIM 7.0	EC002654

ETIM 8.0	EC002654
UNSPSC 16.0901	41111938

Dimensional drawing

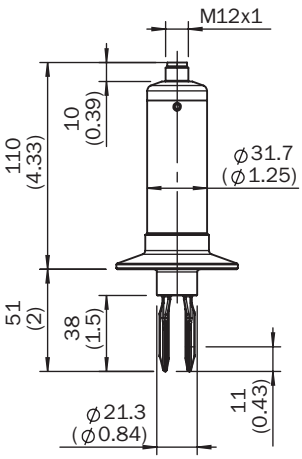

Dimensions in mm (inch)

Recommended accessories

Other models and accessories ➜ www.sick.com/LFV200

	Brief description	Type	part no.
Mounting systems			
	• **Description:** Welded flange/welded connector, process connection G 1 • **Material:** Stainless steel • **Details:** Stainless steel 1.4404	BEF-FL-GEWG10-LFV2	4054605
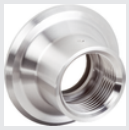	• **Description:** Welded flange/welded connector, G 3/4 process connection • **Material:** Stainless steel • **Details:** Stainless steel 1.4404	BEF-FL-GEWG34-LFV2	4054604
	• **Description:** Welded flange/welded connector, process connection Tri-Clamp 1" • **Material:** Stainless steel • **Details:** Stainless steel 1.4404	BEF-FL-TCLI10-LFV2	5321678
	• **Description:** Welded flange/welded connector, process connection Tri-Clamp 2” • **Material:** Stainless steel • **Details:** Stainless steel 1.4404	BEF-FL-TCLI20-LFV2	5321679
	• **Description:** Welded flange/welded connector, DIN11851-1, DN25 / PN40 • **Material:** Stainless steel • **Details:** Stainless steel 1.4404	BEF-FL-851D25-LFV2	5321527
	• **Description:** Welded flange/welded connector DIN11851-1, DN40 / PN40 • **Material:** Stainless steel • **Details:** Stainless steel 1.4404	BEF-FL-851D40-LFV2	5321459
	• **Description:** Welded flange/welded connector DIN11851-1, DN50 / PN25 • **Material:** Stainless steel • **Details:** Stainless steel 1.4404	BEF-FL-851D50-LFV2	5321528
integration modules and adapters			
	• **Description:** Number of IO-Link ports: 4; Communication mode: COM1/COM2; IO-Link version: IO-Link V1.0; Switching input: PNP; Supply voltage Vs, IO-Link ports: DC 24 V; Current loading: 800 mA; Data transmission rate: Max. 12 MBaud, Autobaud; Address space occupation: 1 bis 126; Connection type: Connector M12; Connection type, IO-Link ports: Connector M12, 5-pin; Suppyl voltage Vs, module: DC 18 ... 30 V; Power consumption: Typ. 75 mA / max. 100 mA (at UL with DC 24 V), Typ. 25 mA + sensor current / max. 80	IOLSHPB-P3104R01	6039728

SICK AT A GLANCE

SICK is one of the leading manufacturers of intelligent sensors and sensor solutions for industrial applications. A unique range of products and services creates the perfect basis for controlling processes securely and efficiently, protecting individuals from accidents and preventing damage to the environment.

We have extensive experience in a wide range of industries and understand their processes and requirements. With intelligent sensors, we can deliver exactly what our customers need. In application centers in Europe, Asia and North America, system solutions are tested and optimized in accordance with customer specifications. All this makes us a reliable supplier and development partner.

Comprehensive services complete our offering: SICK LifeTime Services provide support throughout the machine life cycle and ensure safety and productivity.

For us, that is "Sensor Intelligence."

WORLDWIDE PRESENCE:

Contacts and other locations –www.sick.com

SICK
Sensor Intelligence.