Data sheet

TCT-2ABGE1006MZ

TCT

TEMPERATURE SENSORS

SICK
Sensor Intelligence.

Illustration may differ

Ordering information

Type	part no.
TCT-2ABGE1006MZ	6081765

Other models and accessories ➜ www.sick.com/TCT

Detailed technical data

Features

Measuring range	–50 °C ... +250 °C
Sensor element	Pt1000
Output signal	4 mA ... 20 mA, 2-wire
Maximum ohmic load R_A	$R_A \leq (L^+ - 9\ V) / 0.023\ A$ [Ohm]

Mechanics/electronics

Communication interface	-
Process connection	Thread G ½ B
Seal	Without seal
Insertion length/diameter of probe	100 mm / 6 mm
Wetted parts	Stainless steel 1.4571
Maximum process pressure	≤ 120 bar [1]
Pressure resistance	Max. 120 bar
Housing material	Stainless steel 1.4571
Connection type	M12 round connector x 1, 4-pin [2]
Enclosure rating	IP67 [3]
Measuring current	0.3 mA ... 1 mA
Supply voltage	10 V DC ... 35 V DC
Maximum current consumption	Approx. 30 mA
Electrical safety	Protection class: III, dielectric strength: 500 V AC, Reverse polarity protection: L^+ to M
Protection class III	✓
Weight	Ca. 145 g (depending on configuration)
Initialization time	< 10 ms

[1] Pressure resistance at room temperature.
[2] The enclosure rating classes specified only apply while the thermometer is connected with female connectors that provide the corresponding enclosure rating.
[3] IP enclosure rating as per IEC 60529.

Performance

Accuracy of sensor element	Class A according to IEC 60751
Transmitter accuracy	≤ ± 0.2 % of span
Transmitter linearity	≤ 0.1 % of span
Response time	t_{50} ≤ 2.8 s [1)] t_{90} ≤ 9.1 s [1)]

[1)] Depending on sensor configuration, according to IEC 60751.

Ambient data

Ambient temperature	–40 °C ... +85 °C
Storage and transport temperature	–40 °C ... +85 °C
Shock resistance	500 g (IEC 60751)
Vibration resistance according to IEC 60751	3 g

Certificates

EU declaration of conformity	✓
UK declaration of conformity	✓
China RoHS	✓

Classifications

ECLASS 5.0	27200208
ECLASS 5.1.4	27200208
ECLASS 6.0	27200208
ECLASS 6.2	27200208
ECLASS 7.0	27200208
ECLASS 8.0	27200208
ECLASS 8.1	27200208
ECLASS 9.0	27200208
ECLASS 10.0	27200208
ECLASS 11.0	27200208
ECLASS 12.0	27200208
ETIM 5.0	EC002994
ETIM 6.0	EC002994
ETIM 7.0	EC002994
ETIM 8.0	EC002994
UNSPSC 16.0901	41112211

Dimensional drawing: zylindrical threads

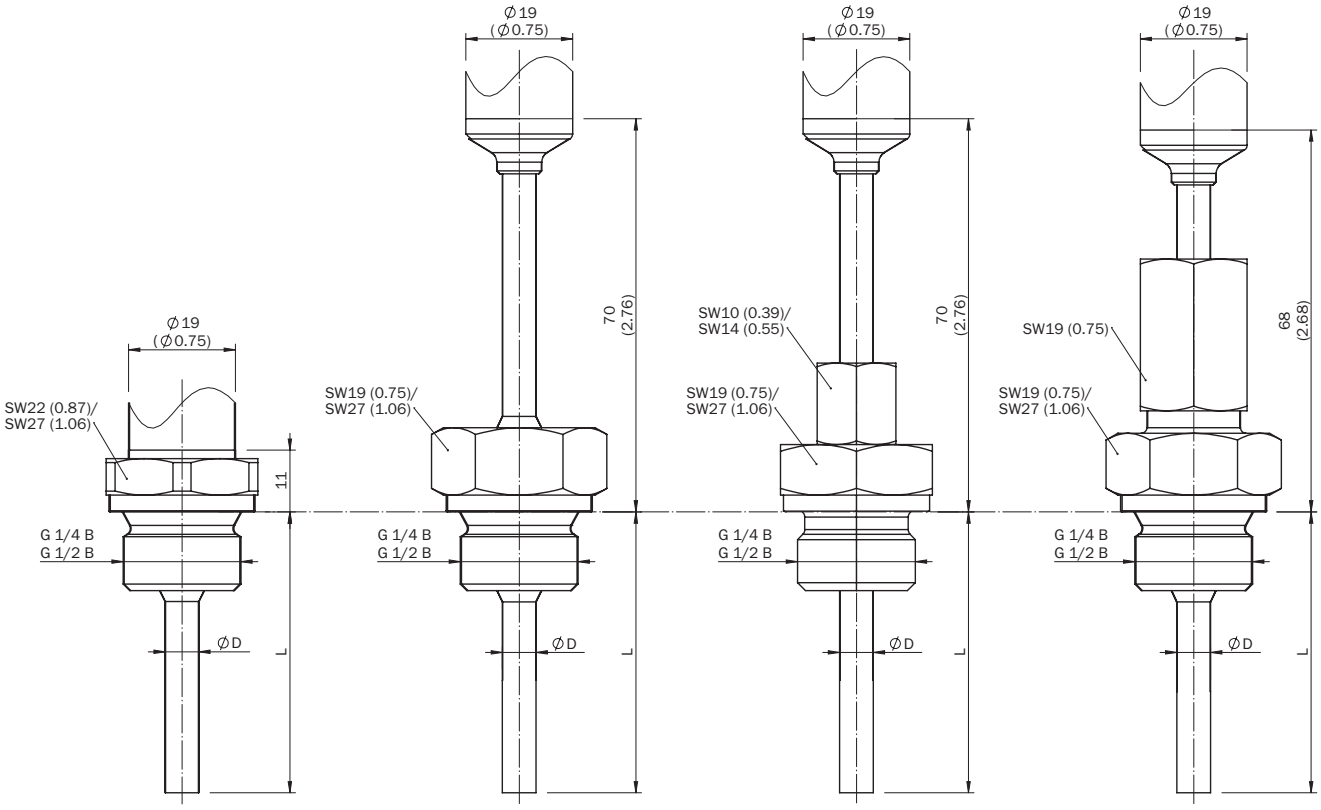

Process connections, cylindrical thread

Threaded connection up to 150 °C	Threaded connection up to 250 °C	Threaded connection and clamping connection	Threaded connection and protective pipe with thread

Dimensions in mm (inch)
TCT-2

Connection type Plug M12 x 1, output signal 4 mA ... 20 mA

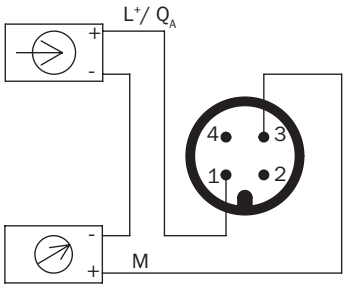

SICK AT A GLANCE

SICK is one of the leading manufacturers of intelligent sensors and sensor solutions for industrial applications. A unique range of products and services creates the perfect basis for controlling processes securely and efficiently, protecting individuals from accidents and preventing damage to the environment.

We have extensive experience in a wide range of industries and understand their processes and requirements. With intelligent sensors, we can deliver exactly what our customers need. In application centers in Europe, Asia and North America, system solutions are tested and optimized in accordance with customer specifications. All this makes us a reliable supplier and development partner.

Comprehensive services complete our offering: SICK LifeTime Services provide support throughout the machine life cycle and ensure safety and productivity.

For us, that is "Sensor Intelligence."

WORLDWIDE PRESENCE:

Contacts and other locations –www.sick.com

SICK
Sensor Intelligence.