Data sheet

LBV321-GXTGDRAMX02500

LBV3xx

LEVEL SENSORS

SICK
Sensor Intelligence.

Illustration may differ

Ordering information

Type	part no.
LBV321-GXTGDRAMX02500	6075954

Other models and accessories → www.sick.com/LBV3xx

Detailed technical data

Features

Medium	Bulk solids
Measurement	Switch
Probe type	Rod probe
Probe length	2,500 mm
Process pressure	–1 bar ... 6 bar
Process temperature	–20 °C ... +80 °C
Fill material density	≥ 0.02 g/cm³
Tensile strength	≤ 3,000 N
ATEX approval	ATEX II 1D, 1/2D, 2D Ex ta ta/tb tb IIIC Tx Da, Da/Db, Db
Type examination	BVS 17 ATEX E 098 X

Performance

Accuracy of sensor element	± 10 mm
Reproducibility	≤ 5 mm
Response time	500 ms [1)] 100 ms [2)]
MTBF	4,17*10^6 h

[1)] When covered.
[2)] When uncovered.

Electronics

Communication interface	-
Supply voltage	20 V DC ... 72 V DC 20 V AC ... 253 V AC
Power consumption	5 mA ... 30 mA
Initialization time	< 2 s
VDE protection class 1	✓
Connection type	M20 x 1.5

Output signal	Double relay (DPDT)
Electronics	Double relay (DPDT)
Hysteresis	10 mm
Output current	> 10 µA; < 3A AC, 1A DC
Enclosure rating	IP66 IP67

Mechanics

Wetted parts	Stainless steel 1.4404 / 316L
Process connection	G 1 ½, DIN 3852-A, PN6 / 316L
Housing material	Aluminum
Sensor material	Stainless steel 316L, 318S, PUR, FEB

Ambient data

Ambient operating temperature	–40 °C ... +70 °C
Ambient temperature, storage	–40 °C ... +80 °C

Classifications

ECLASS 5.0	27273202
ECLASS 5.1.4	27273202
ECLASS 6.0	27273202
ECLASS 6.2	27273202
ECLASS 7.0	27273202
ECLASS 8.0	27273202
ECLASS 8.1	27273202
ECLASS 9.0	27273202
ECLASS 10.0	27273202
ECLASS 11.0	27273202
ECLASS 12.0	27273106
ETIM 5.0	EC002654
ETIM 6.0	EC002654
ETIM 7.0	EC002654
ETIM 8.0	EC002654
UNSPSC 16.0901	41111938

Certificates

EU declaration of conformity	✓
UK declaration of conformity	✓
ACMA declaration of conformity	✓
China RoHS	✓
ATEX certificate	✓
EAC certificate / DoC	✓

Dimensional drawing LBV321 threaded version G 1 ½ A

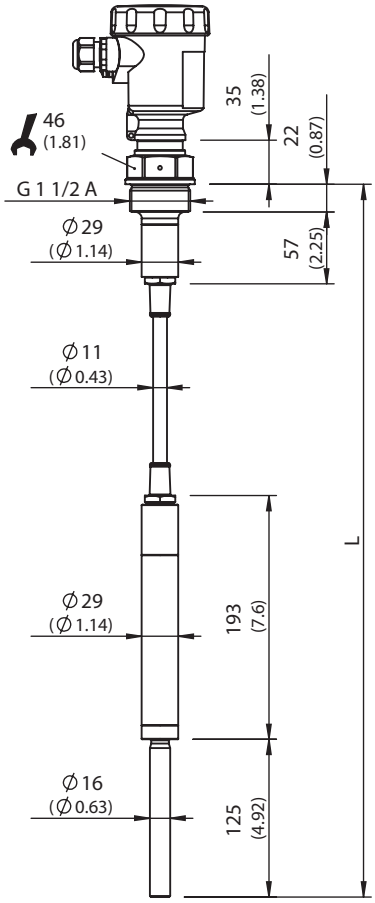

All dimensions in mm (inch)

Dimensions in mm (inch)

Dimensional drawing LBV321 threaded version G 1 A

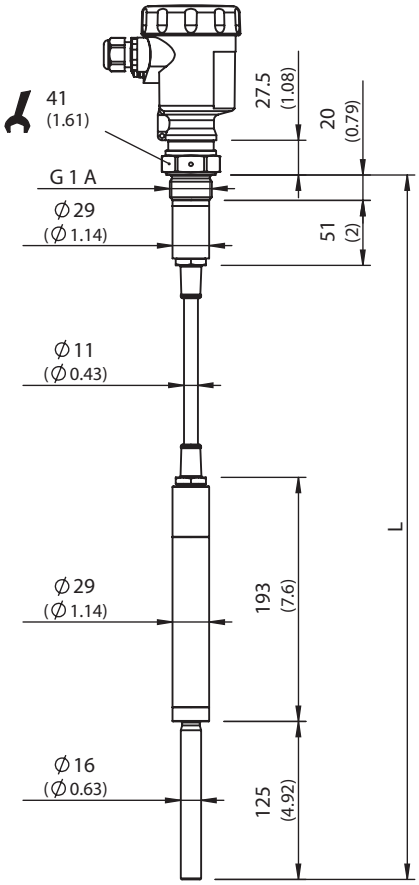

All dimensions in mm (inch)

Dimensions in mm (inch)

Dimensional drawing Temperature adapter

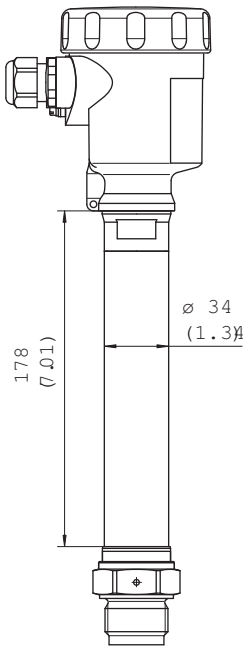

Dimensions in mm (inch)

Connection diagram Double relay connection diagram

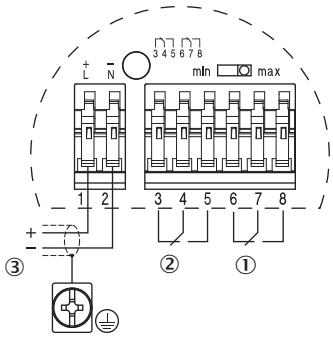

① Relay output
② Relay output
③ Power supply

Instruction for installation Flow orientation of the tuning fork

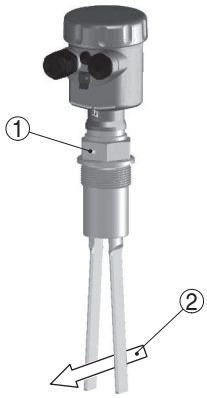

① Marking with screwed version
② Direction of flow

Instruction for installation Horizontal mounting

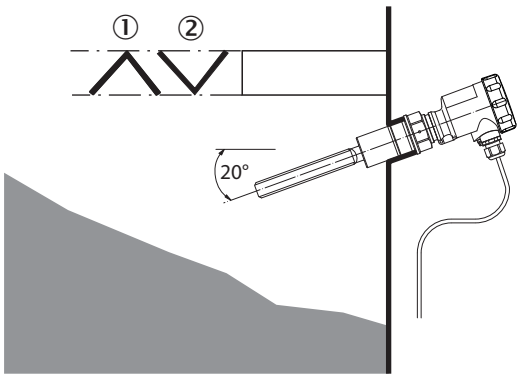

① Protective sheet
② Concave protective sheet for abrasive solids

Recommended accessories

Other models and accessories ➜ www.sick.com/LBV3xx

	Brief description	Type	part no.
Mounting systems			
	• **Description:** Locking screw connection, process pressure –1 bar to 16 bar, process connection G 2 A, inner thread G 1 1/2 A • **Material:** Stainless steel • **Details:** Stainless steel 316L	BEF-MU-316G20-ALBV	5322462

SICK AT A GLANCE

SICK is one of the leading manufacturers of intelligent sensors and sensor solutions for industrial applications. A unique range of products and services creates the perfect basis for controlling processes securely and efficiently, protecting individuals from accidents and preventing damage to the environment.

We have extensive experience in a wide range of industries and understand their processes and requirements. With intelligent sensors, we can deliver exactly what our customers need. In application centers in Europe, Asia and North America, system solutions are tested and optimized in accordance with customer specifications. All this makes us a reliable supplier and development partner.

Comprehensive services complete our offering: SICK LifeTime Services provide support throughout the machine life cycle and ensure safety and productivity.

For us, that is "Sensor Intelligence."

WORLDWIDE PRESENCE:

Contacts and other locations –www.sick.com

SICK
Sensor Intelligence.