Data sheet

IQ05-0B8PO-ZR1

IQY

INDUCTIVE PROXIMITY SENSORS

SICK
Sensor Intelligence.

Ordering information

Type	part no.
IQ05-0B8PO-ZR1	6073556

Other models and accessories → www.sick.com/IQY

Detailed technical data

Features

Housing	Rectangular
Dimensions (W x H x D)	5 mm x 25 mm x 5 mm
Sensing range S_n	0.8 mm
Safe sensing range S_a	0.648 mm
Installation type	Flush
Switching frequency	5,000 Hz
Connection type	Cable with plug M8, 3-pin, with knurled nut, 0.2 m
Switching output	PNP
Switching output detail	PNP
Output function	NC
Electrical wiring	DC 3-wire
Enclosure rating	IP67 [1]

[1] According to EN 60529.

Mechanics/electronics

Supply voltage	10 V DC ... 30 V DC
Ripple	≤ 20 % [1]
Voltage drop	≤ 2 V [2]
Time delay before availability	≤ 10 ms
Hysteresis	1 % ... 10 %
Reproducibility	≤ 1.5 % [3]

[1] Of V_S.
[2] At I_a max.
[3] Ub = 20 V DC ... 30 V DC, Ta = 23 °C ± 5 °C.

Temperature drift (of S_r)	± 10 %
EMC	According to EN 60947-5-2
Continuous current I_a	≤ 200 mA
Cable material	PUR
Conductor size	0.06 mm²
Short-circuit protection	✓
Power-up pulse protection	✓
Shock and vibration resistance	30 g, 11 ms / 10 ... 55 Hz, 1 mm
Ambient operating temperature	–25 °C ... +70 °C
Housing material	Brass, chromium-plated
Sensing face material	Plastic, POM
UL File No.	E191603

[1] Of V_S.
[2] At I_a max.
[3] Ub = 20 V DC ... 30 V DC, Ta = 23 °C ± 5 °C.

Reduction factors

Note	The values are reference values which may vary
Stainless steel (V2A, 304)	Approx. 0.85
Aluminum (Al)	Approx. 0.6
Copper (Cu)	Approx. 0.6
Brass (Br)	Approx. 0.7

Installation note

Remark	Associated graphic see "Installation"
A	0.8 mm
B	0 mm
C	5 mm
D	2.4 mm
E	0 mm
F	7 mm
G	3.3 mm

Certificates

EU declaration of conformity	✓
UK declaration of conformity	✓
ACMA declaration of conformity	✓
Moroccan declaration of conformity	✓
China RoHS	✓
cULus certificate	✓

Classifications

ECLASS 5.0	27270101
ECLASS 5.1.4	27270101
ECLASS 6.0	27270101

ECLASS 6.2	27270101
ECLASS 7.0	27270101
ECLASS 8.0	27270101
ECLASS 8.1	27270101
ECLASS 9.0	27270101
ECLASS 10.0	27270101
ECLASS 11.0	27270101
ECLASS 12.0	27274001
ETIM 5.0	EC002714
ETIM 6.0	EC002714
ETIM 7.0	EC002714
ETIM 8.0	EC002714
UNSPSC 16.0901	39122230

Installation note

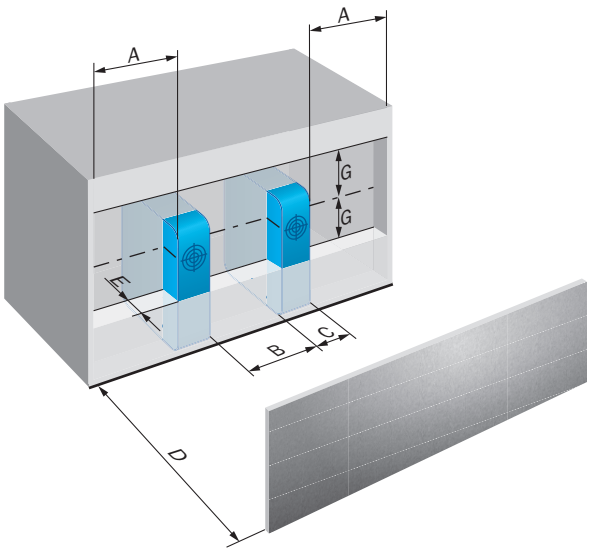

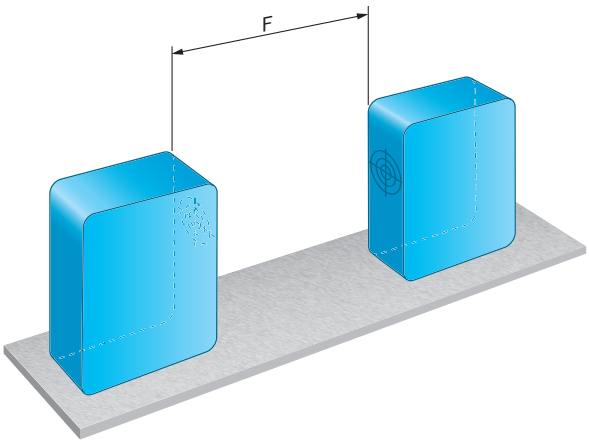

Connection diagram Cd-004

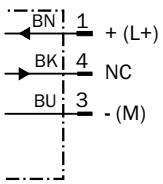

Dimensional drawing Cable with plug M8, with knurled nut

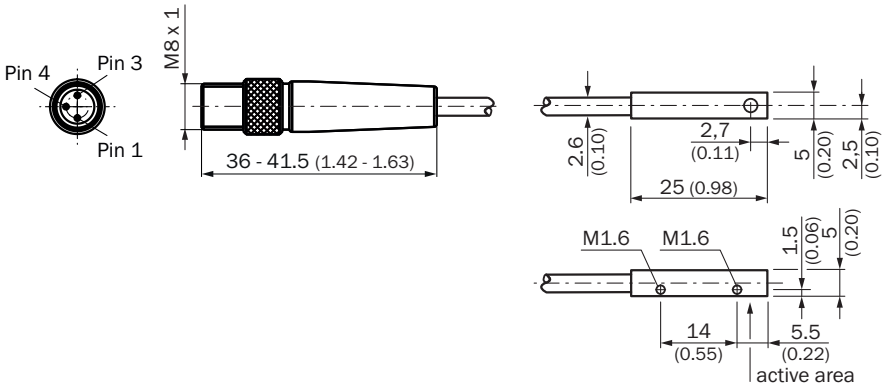

Dimensions in mm (inch)

SICK AT A GLANCE

SICK is one of the leading manufacturers of intelligent sensors and sensor solutions for industrial applications. A unique range of products and services creates the perfect basis for controlling processes securely and efficiently, protecting individuals from accidents and preventing damage to the environment.

We have extensive experience in a wide range of industries and understand their processes and requirements. With intelligent sensors, we can deliver exactly what our customers need. In application centers in Europe, Asia and North America, system solutions are tested and optimized in accordance with customer specifications. All this makes us a reliable supplier and development partner.

Comprehensive services complete our offering: SICK LifeTime Services provide support throughout the machine life cycle and ensure safety and productivity.

For us, that is "Sensor Intelligence."

WORLDWIDE PRESENCE:

Contacts and other locations –www.sick.com

SICK
Sensor Intelligence.