Data sheet

PBS-RB2X5SGESS0E5A0Z

PBS

PRESSURE SENSORS

SICK
Sensor Intelligence.

Illustration may differ

Ordering information

Type	part no.
PBS-RB2X5SGESS0E5A0Z	6066211

Other models and accessories → www.sick.com/PBS

Detailed technical data

Features

Medium	Liquid, gaseous
Pressure type	Gauge pressure
Pressure unit	bar
Measuring range	0 bar ... 2.5 bar
Process temperature	–20 °C ... +85 °C
Maximum ohmic load R_A	4 mA ... 20 mA (R_A ≤ 0.5 kOhm), 0 V ... 10 V, 3-wire (R_A > 10 kOhm)
Zero point adjustment	Max. + 3 % of span
Output signal	2 x PNP + 0 V ... 10 V
Rotatable housing	Display against housing with electrical connection: 330 ° Housing against process connection: 320 °
Display	14-segment-LED, blue, 4-digits, height 9 mm, electronically turnable by 180° Accuracy: ≤ 1 % of span ± 1 digit Update: 1,000, 500, 200, 100 ms (adjustable)

Mechanics/electronics

Communication interface	-
Process connection	G ½ B (EN 837)
Wetted parts	Process connection: 316L stainless steel Measuring chamber: stainless steel 316L
Internal transmission fluid	Silicone oil (only with pressure ranges < 0 bar ... 10 bar and ≤ 0 bar abs ... 25 bar abs)
Pressure port	3.5 mm Standard
Housing material	Lower body: stainless steel 304, Plastic head: PC + ABS, Buttons: TPE-E, Display window: PC
Connection type	Round connector M12 x 1, 5-pin
Supply voltage	15 V DC ... 35 V DC
Power consumption	45 mA (for configurations without analog output signal) 70 mA (for configurations with analog output signal)
Total current consumption	Max. 350 mA / 570 mA (incl. switching current)

[1] Available upon request for process connections G ¼ A according to DIN 3852-E, ¼ " NPT, R ¼ according to ISO 7, and 7/16"-20 UNF.

Electrical safety	Protection class: III Overvoltage protection: 40 V DC Short-circuit protection: Q_A, Q_1, Q_2 towards M Reverse polarity protection: L^+ to M
Isolation voltage	500 V DC
CE-conformity	EMC directive: 2004/108/EC, EN 61326-2-3
Weight sensor	Approx. 200 g
Seal	Without seal
Enclosure rating	IP67
Protection class III	✓
MTTF	333 years
Pressure peak dampening	Through integrated pressure port 0.6 mm or 0.3 mm for process connection G ¼ according to DIN 3852-E (0.3 mm at and above 10 bar) [1)]

[1)] Available upon request for process connections G ¼ A according to DIN 3852-E, ¼ " NPT, R ¼ according to ISO 7, and 7/16"-20 UNF.

Performance

Non-linearity	≤ ± 0.5 %, of span (Best Fit Straight Line, BFSL) according to IEC 61298-2
Accuracy	≤ ± 1 %, of the span (including non-linearity, hysteresis, zero point and full scale error (corresponds to error of measurement as per IEC 61298-2))
Setting accuracy of switching outputs	≤ ± 0.5 % of span
Response time	3 ms
Long-term drift/one-year stability	≤ 0.2 % of span to IEC 61298-2
Temperature coefficient in rated temperature range	Mean TC of zero point: ≤ 0.2% of span / 10 K Mean TC of span ≤ 0.2 % of span / 10 K
Rated temperature range	0 °C ... +80 °C
Service life	Minimum 100 Mio. load cycles
Temperature error	≤ ± 1.0% of the range, typ., ≤ ± 2.5% of the range max.

Ambient data

Ambient temperature, operation	–20 °C ... +80 °C
Storage temperature	–20 °C ... +80 °C
Relative humidity	≤ 90 %
Shock load	50 g according to IEC 60068-2-27 (mechanical shock)
Vibration load	10 g according to IEC 60068-2-6 (vibration under resonance)

Certificates

EU declaration of conformity	✓
China RoHS	✓
cULus certificate	✓

Classifications

ECLASS 5.0	27200620
ECLASS 5.1.4	27200620
ECLASS 6.0	27200620
ECLASS 6.2	27200620
ECLASS 7.0	27200620

ECLASS 8.0	27200620
ECLASS 8.1	27200620
ECLASS 9.0	27200620
ECLASS 10.0	27200620
ECLASS 11.0	27200620
ECLASS 12.0	27200620
ETIM 5.0	EC000243
ETIM 6.0	EC000243
ETIM 7.0	EC000243
ETIM 8.0	EC000243
UNSPSC 16.0901	41112409

Dimensional drawing G ½ B (EN 837)

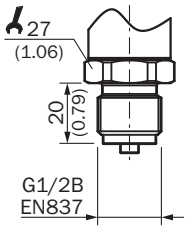

Dimensions in mm (inch)

Dimensional drawing

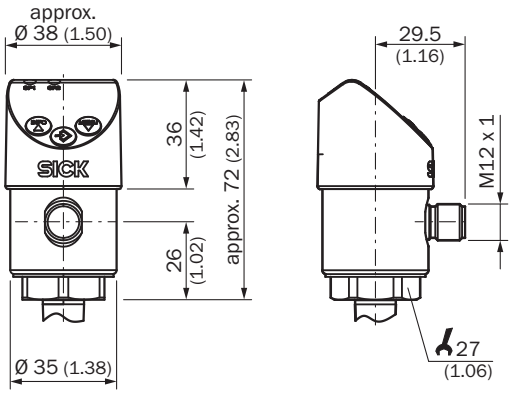

Dimensions in mm (inch)

Connection type

M12 x 1, 4-pin — 2 switching outputs/ 1 switching output + 1 analog output

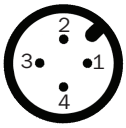

$L^+ = 1$, $M = 3$, $Q_1 = 4$, $Q_2 = 2$
$C/Q_1 = 4$, $Q_A = 2$

M12 x 1, 5-pin — 2 switching outputs + 1 analog output

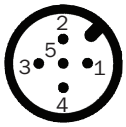

$L^+ = 1$, $M = 3$, $Q_1 = 4$, $Q_2 = 2$, $Q_A = 5$
$C/Q_1 = 4$

Recommended accessories

Other models and accessories ➜ www.sick.com/PBS

	Brief description	Type	part no.
Mounting systems			
	• **Description:** Mounting bracket for simple and stable wall mounting of pressure sensors with 27 mm hexagon • **Material:** Aluminum • **Details:** Aluminum	BEF-FL-ALUPBS-HLDR	5322501
device protection and care			
	• **Description:** Cooling element, extension of the process temperature up to 150 °C. Maximum ambient temperature 30 °C. Max. process pressure 200 bar. Not suitable for pressure measurement in steam. Outer thread G 1/2, inner thread G 1/2. • **Items supplied:** Incl. 2 stainless steel gaskets (1.4571) • **Usable for:** PBS, PBS plus, PFT-2	BEF-CE-G12G12-150C	5324393

SICK AT A GLANCE

SICK is one of the leading manufacturers of intelligent sensors and sensor solutions for industrial applications. A unique range of products and services creates the perfect basis for controlling processes securely and efficiently, protecting individuals from accidents and preventing damage to the environment.

We have extensive experience in a wide range of industries and understand their processes and requirements. With intelligent sensors, we can deliver exactly what our customers need. In application centers in Europe, Asia and North America, system solutions are tested and optimized in accordance with customer specifications. All this makes us a reliable supplier and development partner.

Comprehensive services complete our offering: SICK LifeTime Services provide support throughout the machine life cycle and ensure safety and productivity.

For us, that is "Sensor Intelligence."

WORLDWIDE PRESENCE:

Contacts and other locations –www.sick.com

SICK
Sensor Intelligence.