Data sheet

PFT-SRB060SN1SSAULSSZ

PFT

PRESSURE SENSORS

SICK
Sensor Intelligence.

Illustration may differ

Ordering information

Type	part no.
PFT-SRB060SN1SSAULSSZ	6060120

Other models and accessories → www.sick.com/PFT

Detailed technical data

Features

Medium	Liquid, gaseous
Pressure type	Gauge pressure
Pressure unit	bar
Measuring range	0 bar ... 60 bar
Process temperature	–30 °C ... +100 °C
Maximum ohmic load R_A	4 mA ... 20 mA, 2-wire ($R_A \leq (L^+ - 10\ V) / 0.02\ A$ [Ohm]) , 0 V ... 5 V, 3-wire (R_A > 5 kOhm), 0 V ... 10 V, 3-wire (R_A > 10 kOhm)
Output signal	0 V ... 5 V, 3-wire

Mechanics/electronics

Communication interface	-
Process connection	¼" NPT
Wetted parts	Standard memrane: Stainless steel 316Ti
Internal transmission fluid	Synthetic oil (Not available for version with standard membrane for pressure ranges > 25 bar)
Pressure port	Standard
Housing material	Stainless steel 1.4571
Connection type	L-connector (DIN EN 175301-803 A)
Supply voltage	10 V DC ... 30 V DC
Electrical safety	Overvoltage protection: 36 V DC Short-circuit protection: Q_A towards M Reverse polarity protection: L^+ to M Protection class: III
Dielectric strength	500 V DC, NEC Class 02 power supply (low voltage and low current max. 100 VA even in the event of a fault)
CE-conformity	Pressure equipment directive: 2014/68/EU EMC directive: 2004/108/EC, EN 61326-2-3
Weight sensor	Approx. 200 g
Seal	Without seal

[1] Enclosure rating IP per IEC 60529. The enclosure rating classes specified only apply when connected with female connectors that provide the corresponding enclosure rating.

Enclosure rating	IP65 [1]
Protection class III	✓
MTTF	452 years
Pressure peak dampening	Through optional integrated pressure port 0.6 mm or 0.3 mm for process connector G ¼ according to DIN 3852-E

[1] Enclosure rating IP per IEC 60529. The enclosure rating classes specified only apply when connected with female connectors that provide the corresponding enclosure rating.

Performance

Non-linearity	≤ ± 0.2 %, of span (Best Fit Straight Line, BFSL) according to IEC 61298-2
Accuracy	≤ ± 0.5 %, of the span (= ± 0.25% of the span (optionally for pressure ranges = 0.25 bar). applies inclusive of nonlinearity, hysteresis, non-repeatability, zero-point and full-scale error (corresponds to error of measurement as per IEC 61298-2) Calibrated with vertical installation position)
Non-repeatability	≤ ± 0.1 % of the span
Response time (10 % ... 90 %)	≤ 1 ms ≤ 10 ms at medium temperatures below < –30 °C for pressure ranges up to 25 bar or with flush-mounted membrane
Long-term drift/one-year stability	≤ ± 0.2 % of span (at reference conditions)
Temperature coefficient in rated temperature range	Mean TC of zero: ≤ 0.2 % of span / 10 K (< 0.4 % for pressure ranges ≤ 0.25 bar) Mean TC of span ≤ 0.2 % of span / 10 K
Rated temperature range	0 °C ... +80 °C
Service life	Minimum 10 Mio. load cycles

Ambient data

Ambient temperature, operation	–20 °C ... +80 °C
Storage temperature	–40 °C ... +100 °C, with flush-mounted membrane and cooling element –20 °C ... +100 °C
Shock load	1000 g according to IEC 60068-2-27 (mechanical shock) 400 g according to IEC 60068-2-27 (mechanical shock) for version with integrated cooling element
Vibration load	20 g according to IEC 60068-2-6 (vibration under resonance) 10 g according to IEC 60068-2-6 (vibration undencr resonae) for version with integrated cooling element

Certificates

EU declaration of conformity	✓
UK declaration of conformity	✓
China RoHS	✓

Classifications

ECLASS 5.0	27200614
ECLASS 5.1.4	27200614
ECLASS 6.0	27200614
ECLASS 6.2	27200614
ECLASS 7.0	27200614
ECLASS 8.0	27200614
ECLASS 8.1	27200614
ECLASS 9.0	27200614
ECLASS 10.0	27200614

ECLASS 11.0	27200614
ECLASS 12.0	27200614
ETIM 5.0	EC011478
ETIM 6.0	EC011478
ETIM 7.0	EC011478
ETIM 8.0	EC011478
UNSPSC 16.0901	41112410

Dimensional drawing ¼" NPT

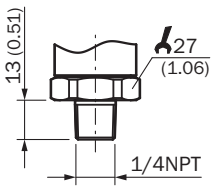

Dimensions in mm (inch)

Dimensional drawing Housing with L-connector (DIN EN 175301-803 A)

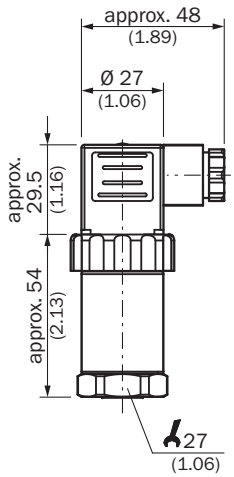

Dimensions in mm (inch)

Connection type

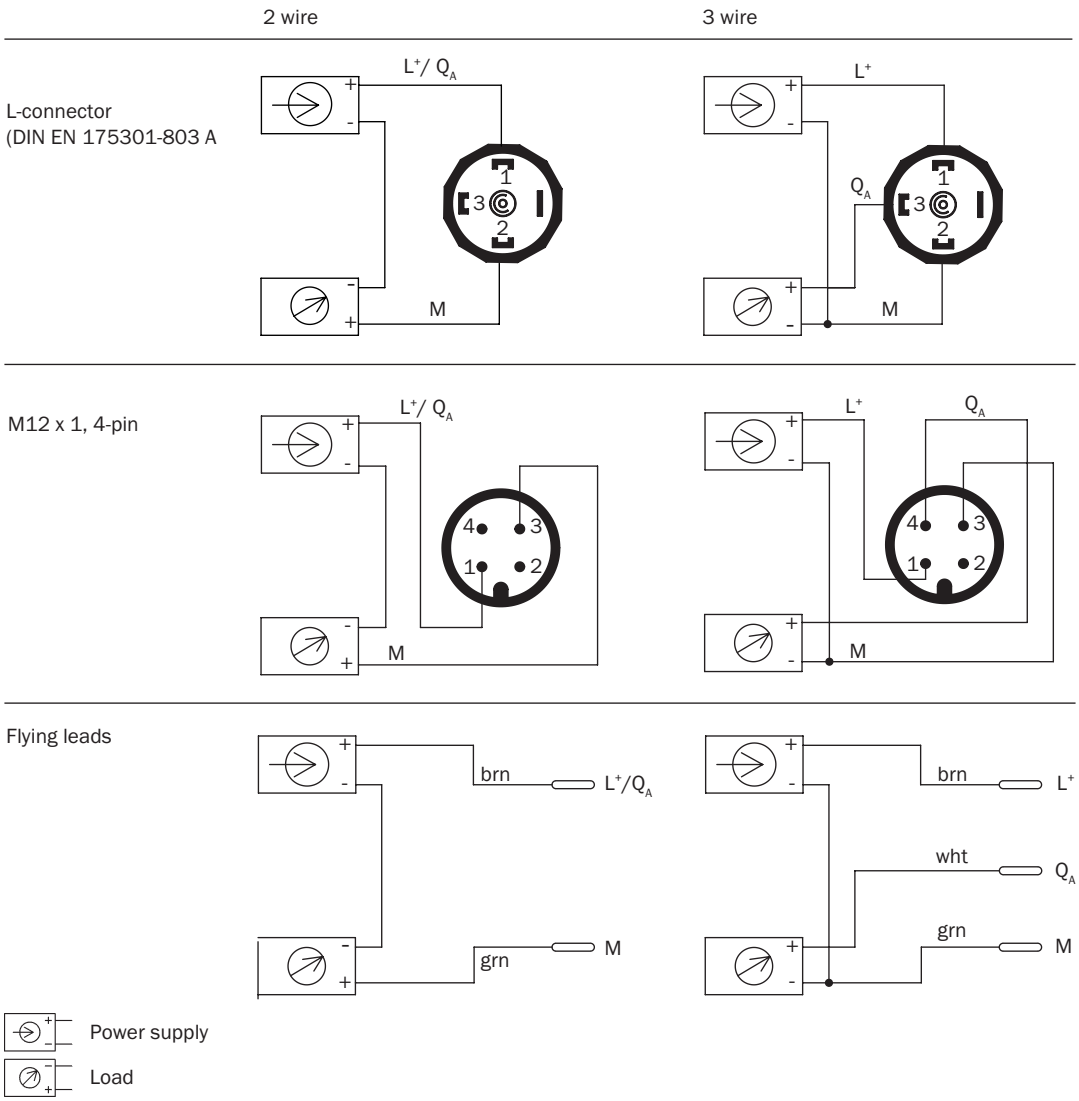

Recommended accessories

Other models and accessories → www.sick.com/PFT

	Brief description	Type	part no.
Mounting systems			
	• **Description:** Mounting bracket for simple and stable wall mounting of pressure sensors with 27 mm hexagon • **Material:** Aluminum • **Details:** Aluminum	BEF-FL-ALUPBS-HLDR	5322501

SICK AT A GLANCE

SICK is one of the leading manufacturers of intelligent sensors and sensor solutions for industrial applications. A unique range of products and services creates the perfect basis for controlling processes securely and efficiently, protecting individuals from accidents and preventing damage to the environment.

We have extensive experience in a wide range of industries and understand their processes and requirements. With intelligent sensors, we can deliver exactly what our customers need. In application centers in Europe, Asia and North America, system solutions are tested and optimized in accordance with customer specifications. All this makes us a reliable supplier and development partner.

Comprehensive services complete our offering: SICK LifeTime Services provide support throughout the machine life cycle and ensure safety and productivity.

For us, that is "Sensor Intelligence."

WORLDWIDE PRESENCE:

Contacts and other locations –www.sick.com

SICK
Sensor Intelligence.