Data sheet

PBSH-CB1X0S55S0BMA0Z

PBS Hygienic

PRESSURE SENSORS

SICK
Sensor Intelligence.

Illustration may differ

Ordering information

Type	part no.
PBSH-CB1X0S55S0BMA0Z	6053093

Other models and accessories ➜ www.sick.com/PBS_Hygienic

Detailed technical data

Features

Medium	Liquid, gaseous
Pressure type	Compound pressure
Pressure unit	bar
Measuring range	–1 bar ... 0 bar
Overpressure safety	2-fold
Process temperature	–20 °C ... +100 °C [1]
Maximum ohmic load R_A	≤ 0.5 kΩ, 4 mA ... 20 mA (R_A ≤ 0.5 kOhm) 0 V ... 10 V (R_A > 10 kOhm)
Zero point adjustment	Max. + 3 % of span
Output signal	1 x PNP + 4 mA ... 20 mA
Rotatable housing	Display against housing with electrical connection: 330 ° Housing against process connection: 320 °
Display	14-segment-LED, blue, 4-digits, height 9 mm, electronically turnable by 180° Accuracy: ≤ 1 % of span ± 1 digit Update: 1,000, 500, 200, 100 ms (adjustable)

[1] +135 °C for max. 1 h.

Mechanics/electronics

Communication interface	-
Process connection	Conical coupling (DIN 11851) DN 50 with union nut
Wetted parts	Process connection: 316L stainless steel
Internal transmission fluid	Medical white oil, FDA compliant according to CFR 172.878 and 21 CFR 178.3620(a), compliant to USP, EP, and JP
Housing material	Lower body: stainless steel 304, Plastic head: PC + ABS, Buttons: TPE-E, Display window: PC
Connection type	M12 round connector x 1, 4-pin
Supply voltage	15 V DC ... 35 V DC
Power consumption	Max. 70 mA

[1] Not for process connection G 1 hygienic.
[2] Enclosure rating IP per IEC 60529. The enclosure rating classes specified only apply when connected with female connectors that provide the corresponding enclosure rating.

Total current consumption	Max. 320 mA (incl. switching current)
Electrical safety	Protection class: III Overvoltage protection: 40 V DC Short-circuit protection: Q_A, Q_1, Q_2 towards M Reverse polarity protection: L^+ to M
Isolation voltage	500 V DC
CE-conformity	EMC directive: 2004/108/EC, EN 61326-2-3
Seal	Without seal [1]
Enclosure rating	IP65 [2] IP67 [2]
Protection class III	✓

[1] Not for process connection G 1 hygienic.

[2] Enclosure rating IP per IEC 60529. The enclosure rating classes specified only apply when connected with female connectors that provide the corresponding enclosure rating.

Performance

Non-linearity	≤ ± 0.5 %, of span (Best Fit Straight Line, BFSL) according to IEC 61298-2
Accuracy	≤ ± 1 %, of the span (including non-linearity, hysteresis, zero point and full scale error (corresponds to error of measurement as per IEC 61298-2))
Setting accuracy of switching outputs	≤ ± 0.5 % of span
Response time	3 ms
Long-term drift/one-year stability	≤ ± 0.2 % of span to IEC 61298-2
Temperature coefficient in rated temperature range	Typical TC of the zero point: in temperature range 0 °C ... 20 °C: 0.7% of the range / 10 K; in temperature range 20 °C ... 80 °C: 0.2% of span / 10 K. Typical TC of span: in temperature range 0 °C ... 80 °C: 0.1% of span / 10 K [1]
Rated temperature range	0 °C ... +80 °C

[1] With Tri-Clamp 1 ½", Tri-Clamp 2", Conical coupling (DIN 11851) DN 40 with union nut, Conical coupling (DIN 11851) DN 50 with union nut, Clamp (DIN 32676) DN 40, Clamp (DIN 32676) DN 50, G 1 hygienic.

Ambient data

Ambient temperature, operation	–20 °C ... +80 °C
Storage temperature	–20 °C ... +80 °C
Relative humidity	45 % ... 75 %
Shock load	50 g according to IEC 60068-2-27 (mechanical shock)
Vibration load	10 g according to IEC 60068-2-6 (vibration under resonance)

Certificates

EU declaration of conformity	✓
UK declaration of conformity	✓
China RoHS	✓
Food contact material manufacturer declaration	✓

Classifications

ECLASS 5.0	27200620
ECLASS 5.1.4	27200620
ECLASS 6.0	27200620

ECLASS 6.2	27200620
ECLASS 7.0	27200620
ECLASS 8.0	27200620
ECLASS 8.1	27200620
ECLASS 9.0	27200620
ECLASS 10.0	27200620
ECLASS 11.0	27200620
ECLASS 12.0	27200620
ETIM 5.0	EC000243
ETIM 6.0	EC000243
ETIM 7.0	EC000243
ETIM 8.0	EC000243
UNSPSC 16.0901	41112409

Dimensional drawing Conical coupling (DIN 11851) with union nut

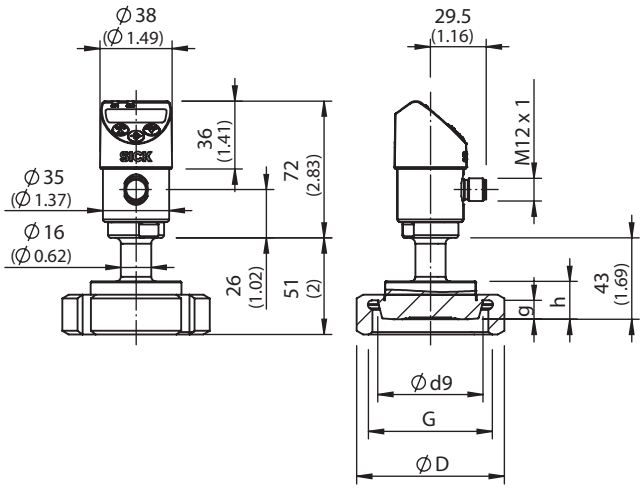

DIN 11851	ø d9	G	ø D	g	h
DN 40	56.0 (2.20)	Rd 65 x 1/6	78 (3.07)	10 (0.39)	20 (0.78)
DN 50	68.5 (2.69)	Rd 78 x 1/6	92 (3.62)	11 (0.43)	20 (0.78)

Dimensions in mm (inch)

Connection type M12 round connector x 1, 4-pin

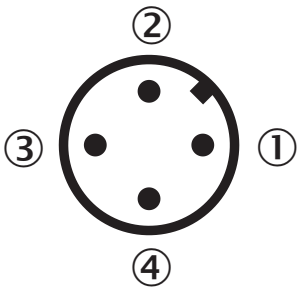

① L^+: Positive supply connection
② Q_A: Analog output
③ M: Negative supply connection
④ C/Q_1: Switching output 1 (with IO-Link: communication / switching output 1)

SICK AT A GLANCE

SICK is one of the leading manufacturers of intelligent sensors and sensor solutions for industrial applications. A unique range of products and services creates the perfect basis for controlling processes securely and efficiently, protecting individuals from accidents and preventing damage to the environment.

We have extensive experience in a wide range of industries and understand their processes and requirements. With intelligent sensors, we can deliver exactly what our customers need. In application centers in Europe, Asia and North America, system solutions are tested and optimized in accordance with customer specifications. All this makes us a reliable supplier and development partner.

Comprehensive services complete our offering: SICK LifeTime Services provide support throughout the machine life cycle and ensure safety and productivity.

For us, that is "Sensor Intelligence."

WORLDWIDE PRESENCE:

Contacts and other locations –www.sick.com

SICK
Sensor Intelligence.