Data sheet

PBT-RB010SGESSSALA0Z

PBT

PRESSURE SENSORS

SICK
Sensor Intelligence.

Illustration may differ

Ordering information

Type	part no.
PBT-RB010SGESSSALA0Z	6043918

Other models and accessories ➜ www.sick.com/PBT

Detailed technical data

Features

Medium	Liquid, gaseous
Pressure type	Gauge pressure
Pressure unit	bar
Measuring range	0 bar ... 10 bar
Process temperature	0 °C ... +80 °C
Maximum ohmic load R_A	4 mA ... 20 mA, 2-wire ($R_A \leq (L^+ - 8\ V) / 0.02\ A$ [Ohm]), 0 V ... 10 V, 3-wire (R_A > 10 kOhm), 0 V ... 5 V, 3-wire (R_A > 5 kOhm)
Output signal	4 mA ... 20 mA, 2-wire

Mechanics/electronics

Communication interface	-
Process connection	G ½ B (EN 837)
Wetted parts	Process connection: 316L stainless steel Measuring chamber: stainless steel 316L
Internal transmission fluid	Silicone oil (only with pressure ranges < 0 bar ... 10 bar and ≤ 0 bar abs ... 25 bar abs)
Pressure port	Standard
Housing material	Stainless steel
Connection type	L-connector (DIN EN 175301-803 A)
Supply voltage	8 V DC ... 30 V DC [1)]
Power consumption	Signal current (max. 25 mA) for current output Max. 8 mA for voltage output signal
Electrical safety	Overvoltage protection: 32 V DC, 36 V DC with 4 mA ... 20 mA Short-circuit protection: Q_A towards M Reverse polarity protection: L^+ to M Protection class: III
Isolation voltage	500 V DC
CE-conformity	Pressure equipment directive: 2014/68/EU, EMC directive: 2014/30/EU, EN 61 326-2-3

[1)] The pressure transmitter must be supplied with power by a limited energy circuit compliant with 9.3 of UL/EN/IEC 601010-1 or LPS to UL/EN/IEC 60950-1 or Class 2 to UL 1310/UL1585 (NEC or CEC). The power supply must be suitable for operation above 2,000 m if the pressure transmitter is used above this altitude.
[2)] Enclosure rating IP per IEC 60529. The enclosure rating classes specified only apply when connected with female connectors that provide the corresponding enclosure rating.

Weight sensor	Approx. 80 g
Seal	Stainless steel
Enclosure rating	IP65 [2]
Protection class III	✓
MTTF	815 years
Pressure peak dampening	Through integrated pressure port 0.6 mm or 0.3 mm for process connection G ¼ according to DIN 3852-E (0.3 mm at and above 10 bar)
Overvoltage protection	36 V DC

[1] The pressure transmitter must be supplied with power by a limited energy circuit compliant with 9.3 of UL/EN/IEC 601010-1 or LPS to UL/EN/IEC 60950-1 or Class 2 to UL 1310/UL1585 (NEC or CEC). The power supply must be suitable for operation above 2,000 m if the pressure transmitter is used above this altitude.
[2] Enclosure rating IP per IEC 60529. The enclosure rating classes specified only apply when connected with female connectors that provide the corresponding enclosure rating.

Performance

Non-linearity	≤ ± 0.5 %, (Best Fit Straight Line, BFSL) according to IEC 61298-2
Accuracy	≤ ± 1 %, of the span (including non-linearity, hysteresis, zero point and full scale error (corresponds to error of measurement as per IEC 61298-2))
Adjustment accuracy of zero signal	≤ 0.5 % of span typ., ≤ 0.8 % of span max. (with non-linerarity 0.5 %)
Hysteresis	≤ 0.16 % of the span
Non-repeatability	≤ 0.1 % of the span
Response time	< 4 ms
Signal noise	≤ 0.3 % of the span
Long-term drift/one-year stability	≤ 0.1 % of span to IEC 61298-2
Rated temperature range	0 °C ... +80 °C
Service life	Minimum 100 Mio. load cycles
Temperature error	≤ ± 1.0% of the range, typ., ≤ ± 2.5% of the range max.
Reference conditions	Reference conditions: According to IEC 61298-1

Ambient data

Ambient temperature, operation	0 °C ... +80 °C
Storage temperature	–40 °C ... +70 °C
Relative humidity	45 % ... 75 %
Shock load	500 g according to IEC 60068-2-27 (mechanical shock)
Vibration load	10 g according to IEC 60068-2-6 (vibration under resonance) 20 g optional

Certificates

EU declaration of conformity	✓
UK declaration of conformity	✓
China RoHS	✓
cULus certificate	✓

Classifications

ECLASS 5.0	27200614
ECLASS 5.1.4	27200614
ECLASS 6.0	27200614

ECLASS 6.2	27200614
ECLASS 7.0	27200614
ECLASS 8.0	27200614
ECLASS 8.1	27200614
ECLASS 9.0	27200614
ECLASS 10.0	27200614
ECLASS 11.0	27200614
ECLASS 12.0	27200614
ETIM 5.0	EC011478
ETIM 6.0	EC011478
ETIM 7.0	EC011478
ETIM 8.0	EC011478
UNSPSC 16.0901	41112410

Dimensional drawing Housing with L-connector (DIN 175301-803 A), IP65

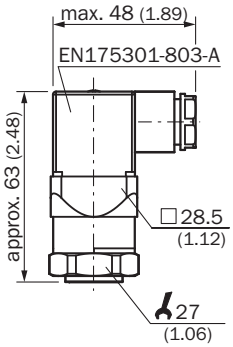

Dimensions in mm (inch)

Connection type

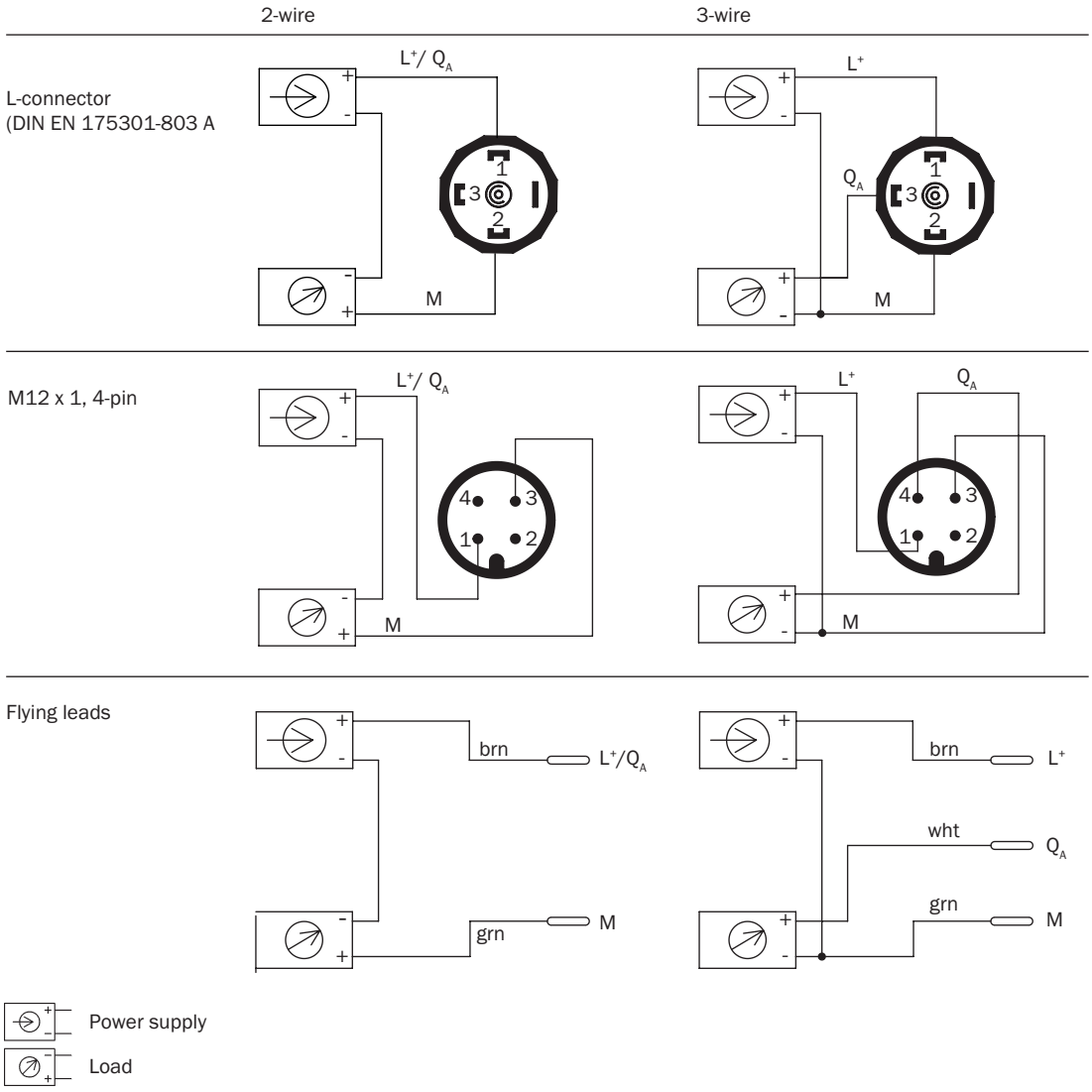

Recommended accessories

Other models and accessories → www.sick.com/PBT

	Brief description	Type	part no.
Mounting systems			
	• **Description:** Mounting bracket for simple and stable wall mounting of pressure sensors with 27 mm hexagon • **Material:** Aluminum • **Details:** Aluminum	BEF-FL-ALUPBS-HLDR	5322501

	Brief description	Type	part no.
device protection and care			
	• **Description:** Cooling element, extension of the process temperature up to 200 °C. Maximum ambient temperature 30 °C. Max. process pressure 200 bar. Not suitable for pressure measurement in steam. Outer thread G 1/2, inner thread G 1/2. • **Material:** Stainless steel • **Items supplied:** Incl. 2 stainless steel gaskets (1.4571) • **Usable for:** PBS, PBS plus, PFT-2	BEF-CE-G12G12-200C	5324394
	• **Description:** Cooling element, extension of the process temperature up to 200 °C. Maximum ambient temperature 30 °C. Max. process pressure 200 bar. Not suitable for pressure measurement in steam. Outer thread G 1/4, inner thread G 1/2. • **Material:** Stainless steel • **Items supplied:** Incl. 2 stainless steel gaskets (1.4571) • **Usable for:** PBS, PBS plus, PFT-2	BEF-CE-G12G14-200C	5336706
	• **Description:** Cooling element, extension of the process temperature up to 150 °C. Maximum ambient temperature 30 °C. Max. process pressure 200 bar. Not suitable for pressure measurement in steam. Outer thread G 1/4, inner thread G 1/2. • **Material:** Stainless steel • **Items supplied:** Incl. 2 stainless steel gaskets (1.4571) • **Usable for:** PBS, PBS plus, PFT-2	BEF-CE-G12G14-150C	5332155

SICK AT A GLANCE

SICK is one of the leading manufacturers of intelligent sensors and sensor solutions for industrial applications. A unique range of products and services creates the perfect basis for controlling processes securely and efficiently, protecting individuals from accidents and preventing damage to the environment.

We have extensive experience in a wide range of industries and understand their processes and requirements. With intelligent sensors, we can deliver exactly what our customers need. In application centers in Europe, Asia and North America, system solutions are tested and optimized in accordance with customer specifications. All this makes us a reliable supplier and development partner.

Comprehensive services complete our offering: SICK LifeTime Services provide support throughout the machine life cycle and ensure safety and productivity.

For us, that is "Sensor Intelligence."

WORLDWIDE PRESENCE:

Contacts and other locations –www.sick.com

SICK
Sensor Intelligence.