Data sheet

LFV200-XXTGBCPVL

LFV200

LEVEL SENSORS

SICK
Sensor Intelligence.

Illustration may differ

Ordering information

Type	part no.
LFV200-XXTGBCPVL	6042248

Other models and accessories ➜ www.sick.com/LFV200

Detailed technical data

Features

Medium	Fluids
Measurement	Switch
Probe type	Tuning fork
Probe length	115 mm
Process pressure	–1 bar ... 64 bar
Process temperature	–40 °C ... +150 °C
Fill material density	0.7 g/cm³ ... 2.5 g/cm³

Performance

Accuracy of sensor element	± 2 mm
Reproducibility	≤ 1 mm
Viscosity	0.1 mPas ... 10,000 mPas
Resolution	≤ 1 mm
Response time	500 ms
MTBF	1,25*10^7 h

Electronics

Communication interface	-
Supply voltage	20 V AC/DC ... 253 V AC/DC
Power consumption	≤ 10 mA
Initialization time	< 3 s
VDE protection class 1	✓
Connection type	Valve plug DIN 43650
Output signal	Non-contact switch
Hysteresis	2 mm

Inductive load	≤ 1 H
Capacitive load	100 nF
Enclosure rating	IP65
Temperature drift	0.03 mm/K

Mechanics

Wetted parts	Stainless steel 1.4404 / 316L
Process connection	G ¾ A PN 64
Housing material	Stainless steel 1.4404 / 316L, PEI

Ambient data

Ambient operating temperature	–40 °C ... +70 °C
Ambient temperature, storage	–40 °C ... +80 °C

Certificates

EU declaration of conformity	✓
UK declaration of conformity	✓
ACMA declaration of conformity	✓
China RoHS	✓
cCSAus certificate	✓
Food contact material manufacturer declaration	✓

Classifications

ECLASS 5.0	27273202
ECLASS 5.1.4	27273202
ECLASS 6.0	27273202
ECLASS 6.2	27273202
ECLASS 7.0	27273202
ECLASS 8.0	27273202
ECLASS 8.1	27273202
ECLASS 9.0	27273202
ECLASS 10.0	27273202
ECLASS 11.0	27273202
ECLASS 12.0	27273106
ETIM 5.0	EC002654
ETIM 6.0	EC002654
ETIM 7.0	EC002654
ETIM 8.0	EC002654
UNSPSC 16.0901	41111938

Dimensional drawing housing

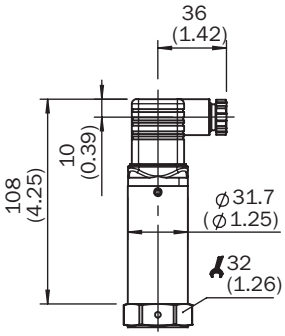

Dimensions in mm (inch)

Dimensional drawing

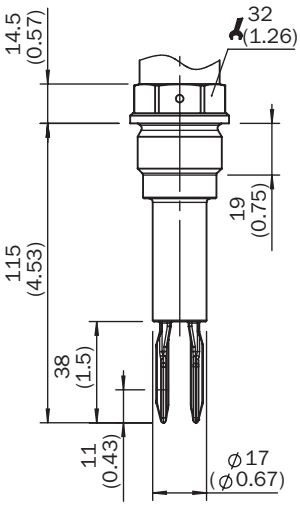

Dimensions in mm (inch)

Recommended accessories

Other models and accessories ➜ www.sick.com/LFV200

	Brief description	Type	part no.
Mounting systems			
	• **Description:** Welded flange/welded connector, process connection G 1 • **Material:** Stainless steel • **Details:** Stainless steel 1.4404	BEF-FL-GEWG10-LFV2	4054605
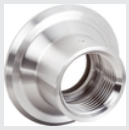	• **Description:** Welded flange/welded connector, G 3/4 process connection • **Material:** Stainless steel • **Details:** Stainless steel 1.4404	BEF-FL-GEWG34-LFV2	4054604
	• **Description:** Welded flange/welded connector, process connection Tri-Clamp 1" • **Material:** Stainless steel • **Details:** Stainless steel 1.4404	BEF-FL-TCLI10-LFV2	5321678
	• **Description:** Welded flange/welded connector, process connection Tri-Clamp 2” • **Material:** Stainless steel • **Details:** Stainless steel 1.4404	BEF-FL-TCLI20-LFV2	5321679
	• **Description:** Welded flange/welded connector, DIN11851-1, DN25 / PN40 • **Material:** Stainless steel • **Details:** Stainless steel 1.4404	BEF-FL-851D25-LFV2	5321527
	• **Description:** Welded flange/welded connector DIN11851-1, DN40 / PN40 • **Material:** Stainless steel • **Details:** Stainless steel 1.4404	BEF-FL-851D40-LFV2	5321459
	• **Description:** Welded flange/welded connector DIN11851-1, DN50 / PN25 • **Material:** Stainless steel • **Details:** Stainless steel 1.4404	BEF-FL-851D50-LFV2	5321528

SICK AT A GLANCE

SICK is one of the leading manufacturers of intelligent sensors and sensor solutions for industrial applications. A unique range of products and services creates the perfect basis for controlling processes securely and efficiently, protecting individuals from accidents and preventing damage to the environment.

We have extensive experience in a wide range of industries and understand their processes and requirements. With intelligent sensors, we can deliver exactly what our customers need. In application centers in Europe, Asia and North America, system solutions are tested and optimized in accordance with customer specifications. All this makes us a reliable supplier and development partner.

Comprehensive services complete our offering: SICK LifeTime Services provide support throughout the machine life cycle and ensure safety and productivity.

For us, that is "Sensor Intelligence."

WORLDWIDE PRESENCE:

Contacts and other locations –www.sick.com

SICK
Sensor Intelligence.